PRODUCT INFORMATION

4090-9001 IDNET SLC, SUPERVISED ADDRESSABLE INPUT MODULE (AIM)

FEATURES:

- UL LISTED
- ADDRESSABLE COMMUNICATIONS SUPPLY BOTH DATA AND POWER TO PROVIDE:
  - SUPERVISED STYLE B MONITORING OF NORMALLY OPEN DRY CONTACTS.
  - COMMUNICATIONS WIRING USING ONE TWISTED, SHIELDED WIRE PAIR.
- COMPATIBLE WITH SIMPLEX ADDRESSABLE FIRE ALARM CONTROL PANELS.
- COMPACT, SEALED CONSTRUCTION:
  - ALLOWS MOUNTING IN A SINGLE GANG BOX
  - REDUCES DUST INFILTRATION
- PROVIDES CURRENT LIMITED MONITORING
  - TO MONITOR TAMPER SWITCH (SUPERVISORY) AND WATER FLOW SWITCH (ALARM) ON SAME CIRCUIT
  - REQUIRES ONLY ONE ADDRESSABLE POINT
- SELECTABLE LATCHING OPERATION
  - MONITORS MOMENTARY CONTACT CLOSURES SUCH AS RATE-OF RISE HEAT DETECTORS

SPECIFICATIONS:

- WIRE CONNECTIONS: SCREW TERMINALS FOR IN/OUT WIRING FOR WIRE FROM #18 TO #14 AWG.
- DIMENSIONS: 1 9/16" X 1 3/4" X 1 1/4"
- TEMPERATURE RANGE: 32° F TO 158° F (0° C TO 70° C)
- HUMIDITY: UP TO 93% RH AT 100° F
- SUPERVISION RESISTOR: 6.8kΩ 1/2W, (SUPPLIED) SIMPLEX PART NO. 733-886
- RESISTOR FOR CURRENT LIMITED OPERATION: 4.7kΩ 1/2W, WITH A 1.8kΩ 1/2W
- INPUT REQUIREMENTS: NORMALLY OPEN, DRY CONTACTS
- HOUSING MATERIAL: BLACK THERMOPLASTIC

DESCRIPTION:

THE 4090-9001 IS AN ADDRESSABLE INPUT MODULE (AIM) WITH POWER AND COMMUNICATIONS SUPPLIED BY A TWO WIRE ADDRESSABLE CIRCUIT. IT PROVIDES LOCATION SPECIFIC ADDRESSABILITY TO A SINGLE INITIATING DEVICE (SUCH AS SINGLE STATION SMOKE DETECTOR ALARM CONTACTS OR HEAT DETECTOR CONTACTS) OR MULTIPLE DEVICES AT THE SAME LOCATION BY MONITORING NORMALLY OPEN, DRY CONTACTS AND THE WIRING TO AN END-OF-LINE RESISTOR. CLOSURE OF THE MONITORED CONTACTS INITIATES AN ALARM OR OTHER RESPONSE AS PROGRAMMED AT THE FIRE ALARM CONTROL PANEL. AN OPEN IN THE MONITORED CIRCUIT WIRING WILL CAUSE A TROUBLE TO BE REPORTED.
IF THE INITIATING DEVICE CONTACTS ARE MOMENTARY, SUCH AS FROM A RATE-OF-RISE HEAT DETECTOR, ENABLING THE LATCH FEATURE WILL MAINTAIN THE ALARM CONDITION UNTIL THE SYSTEM IS RESET. FOR APPLICATIONS WHERE THE CONTACT CLOSURE LATCHES, OR IF ITS CONDITION NEEDS TO BE TRACKED AT THE CONTROL PANEL NON-LATCHING OPERATION MAY BE ENABLED.

WIRING NOTES:

1. ALL WIRING TO COMPLY WITH LOCAL CODE.
2. CONDUCTORS MUST TEST FREE OF ALL GROUNDS.
3. ONLY N.O. DRY CONTACTS ARE ALLOWED.
4. MAXIMUM WIRE LENGTH (NO. 18 AWG) IS 400 FT. W/2081-9044 OVER VOLTAGE PROTECTORS OR 400 FT. W/O PROTECTORS.
5. A MAXIMUM QUANTITY OF DEVICES PER CIRCUIT: CONTROL PANEL MODULE DEPENDENT
6. IF SHIELD IS PRESENT, CONNECT TO THE OUTGOING IDNet SHIELD TO PROVIDE A CONTINUOUS SHIELD OVER THE LENGTH OF THE IDNet CHANNEL. METHOD OF SPLICE DETERMINED BY AHJ.
7. REFER TO INSTALLATION INSTRUCTIONS 574-331.
8. MAXIMUM ALLOWABLE LINE RUN FROM THE F.A.C.P. TO THE FARTHEST DEVICE, NOT TO EXCEED 2500 FEET.
9. MAXIMUM TOTAL WIRE (INCLUDING ALL T-TAPS) FROM THE FIRE ALARM CONTROL PANEL
10. FOR STYLE 6 CIRCUIT WIRING IT IS RECOMMENDED THAT THE PRIMARY ① AND THE BACK-UP ② LINES BE IN SEPARATE WIRE RUNS AND IN COMPLIANCE WITH LOCAL REQUIREMENTS.
11. REFER TO FIELD WIRING DIAGRAM 842-073

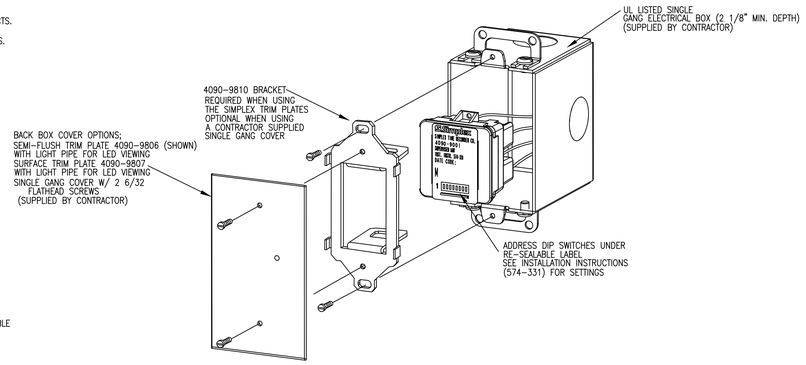

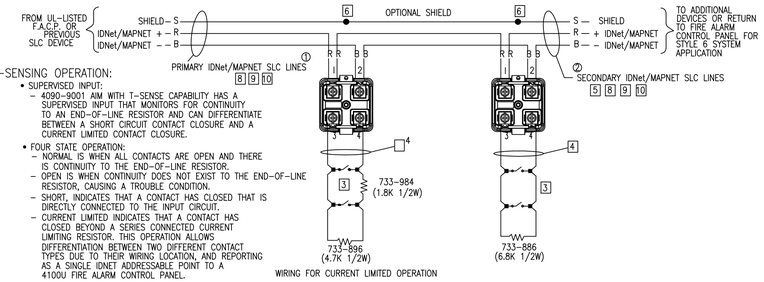

T-SENSING OPERATION:

- SUPERVISED INPUT:
  - 4090-9001 AIM WITH T-SENSE CAPABILITY HAS A SUPERVISED INPUT THAT MONITORS FOR CONTINUITY TO AN END-OF-LINE RESISTOR AND CAN DIFFERENTIATE BETWEEN A SHORT CIRCUIT CONTACT CLOSURE AND A CURRENT LIMITED CONTACT CLOSURE.
- FOUR STATE OPERATION:
  - NORMAL IS WHEN ALL CONTACTS ARE OPEN AND THERE IS CONTINUITY TO THE END-OF-LINE RESISTOR.
  - OPEN IS WHEN CONTINUITY DOES NOT EXIST TO THE END-OF-LINE RESISTOR, CAUSING A TROUBLE CONDITION.
  - SHORT, INDICATES THAT A CONTACT HAS CLOSED THAT IS DIRECTLY CONNECTED TO THE INPUT CIRCUIT.
  - CURRENT LIMITED INDICATES THAT A CONTACT HAS CLOSED BEYOND A SERIES CONNECTED CURRENT LIMITING RESISTOR. THIS OPERATION ALLOWS DIFFERENTIATION BETWEEN TWO DIFFERENT CONTACT TYPES DUE TO THEIR WIRING LOCATION, AND REPORTING AS A SINGLE IDNET ADDRESSABLE POINT TO A 4100U FIRE ALARM CONTROL PANEL.

TrueAlert™ NON-ADDRESSABLE MULTI-CANDELA AUDIBLE/VISIBLE NOTIFICATION APPLIANCE (CEILING MOUNT)

PRODUCT INFORMATION

FEATURES:

- CLASS B (STYLE Y) OPERATION REQUIRES CONNECTION TO A COMPATIBLE SMARTSYNC NAC OR TO SMARTSYNC CONTROL MODULE (SCM) 4905-9938
- CLASS A (STYLE Z) OPERATION WHEN CONNECTED TO THE 4905-9938 SCM OR 4100 SERIES FIRE ALARM CONTROL PANEL NAC'S

SPECIFICATIONS:

- HOUSING DIMENSIONS (INCLUDING LENS) : 4-3/4"L X 6-7/8" W X 2-5/8"D
- TEMPERATURE RANGE: 32° F TO 122° F (0° TO 50° C)
- HUMIDITY RANGE: 10% TO 93% NON-CONDENSING AT 100° F (38° C)
- TERMINAL BLOCKS FOR 18 AWG TO 12 AWG; TWO WIRES PER TERMINAL FOR IN/OUT WIRING.

STROBE

- RATED VOLTAGE RANGE: UL: 16 VDC TO 33 VDC PER UL 1971
  ULC: 20VDC TO 30VDC PER ULC S526-M878
- FLASH RATE: 1Hz
- SYNCHRONIZED MODE NAC LOADING: MAXIMUM OF 35 SYNCHRONIZED STROBES PER NAC CIRCUIT.

*CURRENT DRAWS REFLECT STROBE FLASHING AND HORN ON.

MODEL NUMBER	HOUSING COLOR	LETTERING COLOR	STROBE RATING	RMS CURRENT @ 16 VDC	18 VDC	24 VDC
4906-9128	RED	WHITE	15cd	86 mA	76 mA	57 mA
			30cd	132 mA	117 mA	88 mA
			75cd	250 mA	222 mA	167 mA
			110cd	320 mA	284 mA	213 mA
4906-9130	WHITE	RED	15cd	86 mA	76 mA	57 mA
			30cd	132 mA	117 mA	88 mA
			75cd	250 mA	222 mA	167 mA
			110cd	320 mA	284 mA	213 mA

HORN

- SOUND OUTPUT CHARACTERISTICS: 2400 TO 3700 Hz SWEEP, MODULATED AT 120 Hz RATE

HORN SOUND OUTPUT RATINGS @ 10 FT. (3m)						
VOLTAGE	16 VDC		24 VDC		33 VDC	
SOUND TYPE *	STEADY	CODED	STEADY	CODED	STEADY	CODED
REVERBERATE CHAMBER UL 464 TEST	86 dBA	82 dBA	88 dBA	84 dBA	90 dBA	86 dBA
ANECHOIC CHAMBER	92 dBA	91 dBA	94 dBA	95 dBA	96 dBA	96 dBA

* CODED VALUES ARE TYPICAL OF THE OUTPUT MEASURED WITH A TEMPORAL CODED OR A MARCH TIME CODED PULSE AND WITH A SOUND LEVEL METER READING ON A "FAST" SETTING. UNDER THE SAME TEST CONDITIONS, CODED HORN OUTPUT "PEAK" SOUND LEVEL READINGS ARE TYPICALLY 4 dBA HIGHER.

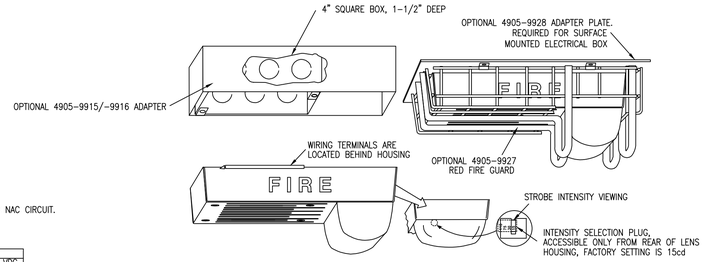

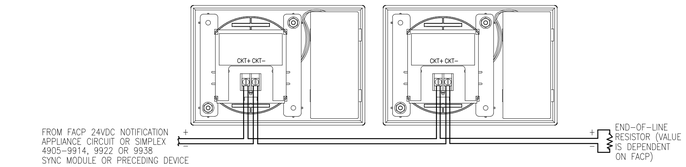

TrueAlert™ NON-ADDRESSABLE MULTI-CANDELA VISIBLE NOTIFICATION APPLIANCE (WALL MOUNT)

PRODUCT INFORMATION

FEATURES:

- UL LISTED TO STANDARD 1971
- ADA COMPATIBLE

SYNCHRONIZATION FLASH RATE MODE FOR USE WITH:

- SEPARATE STROBE SYNCHRONIZATION MODULES THAT ARE AVAILABLE FOR CLASS B OR CLASS A OPERATION
- SEPARATE SMARTSYNC CONTROL MODULES (SCMs) THAT PROVIDE CLASS B OR CLASS A OUTPUT FROM CONVENTIONAL NAC INPUTS

SPECIFICATIONS:

- HOUSING DIMENSIONS: 5-1/8" H X 5" W X 2-3/4" D (130mm X 127mm X 70mm)
- TEMPERATURE RANGE: 32°F TO 122°F (0 TO 50°C)
- HUMIDITY RANGE: 10% TO 93% NON-CONDENSING AT 100°F (38°C)
- TERMINAL BLOCKS FOR 18AWG TO 12AWG; TWO WIRES PER TERMINAL FOR IN/OUT WIRING.

WIRING:

1. NOTIFICATION APPLIANCES ARE RATED PER INDIVIDUAL NAMEPLATE LABEL.
2. MAINTAIN CORRECT POLARITY ON TERMINAL CONNECTIONS. DO NOT LOOP WIRES UNDER TERMINALS.
3. ALL NAC WIRING CONNECTIONS ARE SUPERVISED AND POWER-LIMITED.
4. SEE INSTALLATION INSTRUCTIONS (579-548) FOR ADDITIONAL INFORMATION.

STROBE:

- RATED VOLTAGE RANGE: UL LISTED: 16 VDC TO 33 VDC PER UL 1971
  ULC LISTED: 20 VDC TO 30 VDC PER ULC S526-M878
- FLASH RATE: 1Hz
- SYNCHRONIZED MODE NAC LOADING: MAXIMUM OF 35 SYNCHRONIZED STROBES PER NAC CIRCUIT.

*CURRENT DRAWS REFLECT STROBE FLASHING

MODEL NUMBER	HOUSING COLOR	LETTERING COLOR	STROBE RATING	RMS CURRENT @ 16 VDC	18 VDC	24 VDC
4906-9101	RED	WHITE	15cd	60 mA	53 mA	40 mA
			30cd	94 mA	84 mA	63 mA
			75cd	186 mA	165 mA	124 mA
			110cd	252 mA	224 mA	168 mA
4906-9103	WHITE	RED	15cd	60 mA	53 mA	40 mA
			30cd	94 mA	84 mA	63 mA
			75cd	186 mA	165 mA	124 mA
			110cd	252 mA	224 mA	168 mA

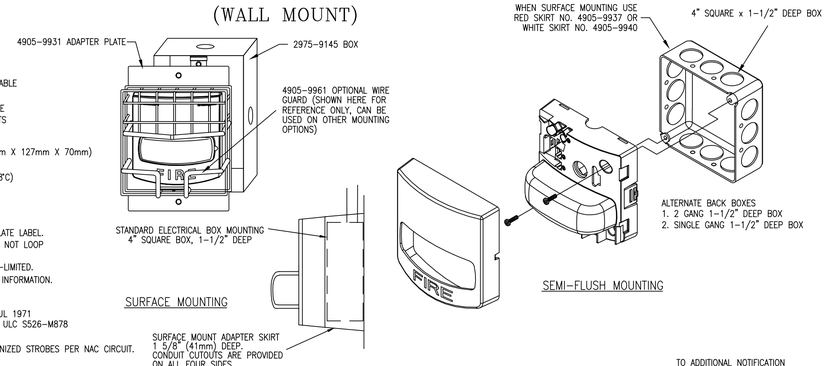

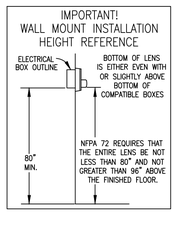

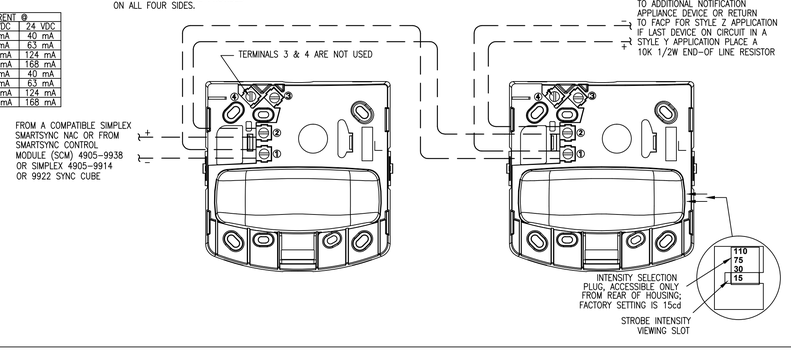

TrueAlert™ NON-ADDRESSABLE MULTI-CANDELA VISIBLE NOTIFICATION APPLIANCE WEATHERPROOF

PRODUCT INFORMATION

FEATURES:

- UL LISTED TO STANDARD 1971 FOR INDOOR APPLICATIONS WITH SELECTABLE STROBE INTENSITY SETTINGS
- UL LISTED TO STANDARD 1638 FOR OUTDOOR APPLICATIONS
- INDOOR APPLICATIONS ARE ADA COMPATIBLE

SYNCHRONIZATION FLASH RATE MODE FOR USE WITH:

- SEPARATE STROBE SYNCHRONIZATION MODULES THAT ARE AVAILABLE FOR CLASS B OR CLASS A OPERATION
- SEPARATE SMARTSYNC CONTROL MODULES (SCMs) THAT PROVIDE CLASS B OR CLASS A OUTPUT FROM CONVENTIONAL NAC INPUTS

SPECIFICATIONS:

- HOUSING DIMENSIONS: 5-1/8" H X 5" W X 2-3/4" D (130mm X 127mm X 70mm)
- UL 1971 LISTED TEMPERATURE RANGE: 32°F TO 122°F (0°C TO 50°C)
- UL 1638 LISTED TEMPERATURE RANGE: -31°F TO 150°F (-35°C TO 66°C)
- HUMIDITY RANGE: 10% TO 93% NON-CONDENSING AT 100°F (38°C)
- TERMINAL BLOCKS FOR 18AWG TO 12AWG; TWO WIRES PER TERMINAL FOR IN/OUT WIRING.

STROBE:

- RATED VOLTAGE RANGE: UL LISTED: 16 VDC TO 33 VDC PER UL 1971 AND UL 1638
- FLASH RATE: 1Hz
- NAC LOADING: MAXIMUM OF 24 STROBES PER NAC CIRCUIT.

*CURRENT DRAWS REFLECT STROBE FLASHING

MODEL NUMBER	HOUSING COLOR	LETTERING COLOR	STROBE RATING	UL 1971 RATINGS @ 32°F TO 122°F (0°C TO 50°C) 16 VDC	18 VDC	24 VDC
4906-9105 4906-9106	RED WHITE	WHITE RED	15cd	77 mA	69 mA	61 mA
			60cd	192 mA	171 mA	128 mA
			75cd	231 mA	206 mA	154 mA
				UL 1638 RATINGS @ 32°F TO 122°F (0°C TO 50°C) 16 VDC	18 VDC	24 VDC
			WP75cd	189 mA	168 mA	126 mA
				UL 1638 RATINGS @ -31°F TO 150°F (-35°C TO 66°C) 16 VDC	18 VDC	24 VDC
			WP75cd	273 mA	243 mA	182 mA

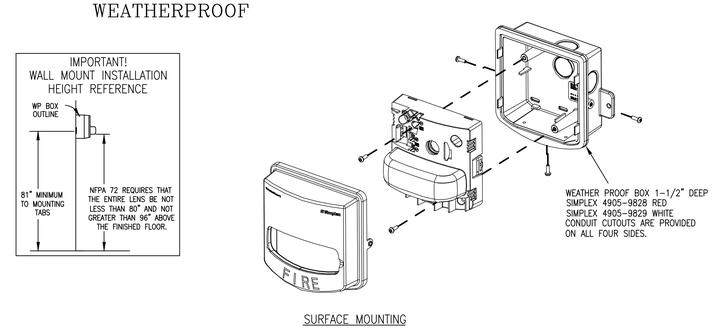

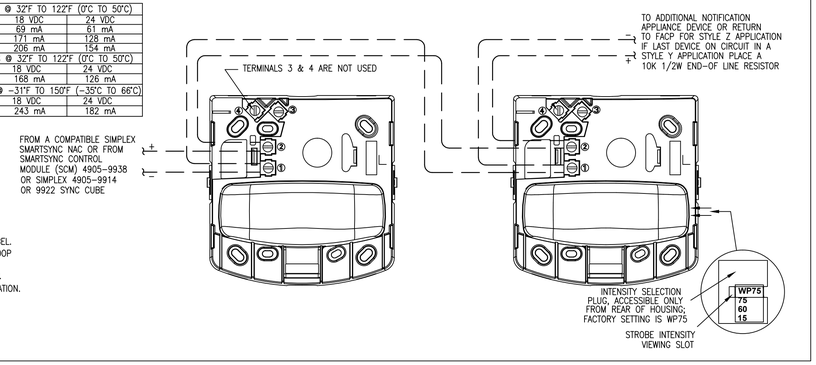

WIRING:

1. NOTIFICATION APPLIANCES ARE RATED PER INDIVIDUAL NAMEPLATE LABEL.
2. MAINTAIN CORRECT POLARITY ON TERMINAL CONNECTIONS. DO NOT LOOP WIRES UNDER TERMINALS.
3. ALL NAC WIRING CONNECTIONS ARE SUPERVISED AND POWER-LIMITED.
4. SEE INSTALLATION INSTRUCTIONS (579-857) FOR ADDITIONAL INFORMATION.

tyco SimplexGrinnell
Safer. Smarter. Tyco.™
DISTRICT - 147
20 THOMAS DRIVE
WESTBROOK, ME 04092
SERVICE: 207-842-6440
PHONE: 207-842-6440
FAX: 207-842-6439

PORTLAND FOOD CO-OP

PORTLAND FOOD CO-OP
290 CONGRESS STREET
PORTLAND, ME 04101

ISSUE LOG:					
MARK	DATE	CAD	CHK	DESCRIPTION	Revisions shown with ⚠ symbol

DRAWN BY:	G.LORION
CHECKED BY:	S. KALAFARSKI
ISSUE DATE:	9/17/14
JOB #:	
PROJECT #:	147:980171201
SIMPLEXGRINNELL ©	2014
SYSTEM:	FIRE ALARM SYSTEM
SHEET:	WIRING TYPICALS

FA-703

IMPORTANT NOTICE TO USERS: By accepting or using this drawing you agree to the terms and conditions stated herein. You can reproduce or distribute this drawing only for a purpose approved by Tyco. Any other use, reuse, copying, modification or alteration of the information contained herein shall lie at the sole risk of the user. This information may not be sold or transferred to any third party, used on other projects or additions to this project for which it was prepared, or used for completion of this project by any third party. SimplexGrinnell disclaims all liability for the use or reuse of altered files by the user or any third party and accordingly will not be a party to such use. User shall, to the fullest extent permitted by law, defend, indemnify, and hold SimplexGrinnell harmless from any and all claims for loss, damage or injury arising directly or indirectly therefrom.

FILE PATH: P:\2014\147\Portland Food Co-op\CAD\FA-703.dwg
LAST SAVED BY: G.LORION
LAST PRINTED: 9/17/2014 2:48:23 PM
24" x 36" - Arch D Size