DEVICE MOUNTING HEIGHT REFERENCE (PER NFPA 72)

VISUAL APPLIANCE MOUNTING HEIGHT CONSIDERATIONS IN SLEEPING ROOMS

1. MIN DISTANCE IN SLEEPING ROOMS IS 24" (610mm) FROM CEILING TO TOP OF LENS FOR 110CD STROBES WITHIN 16' OF THE PILLOW
2. 177CD STROBES, USED IN SLEEPING ROOMS, CAN BE WITHIN THE 24" (610mm) MINIMUM DISTANCE FROM THE CEILING. THE HIGHER INTENSITY IS TO COMPENSATE FOR A POSSIBLE SMOKE LAYER.

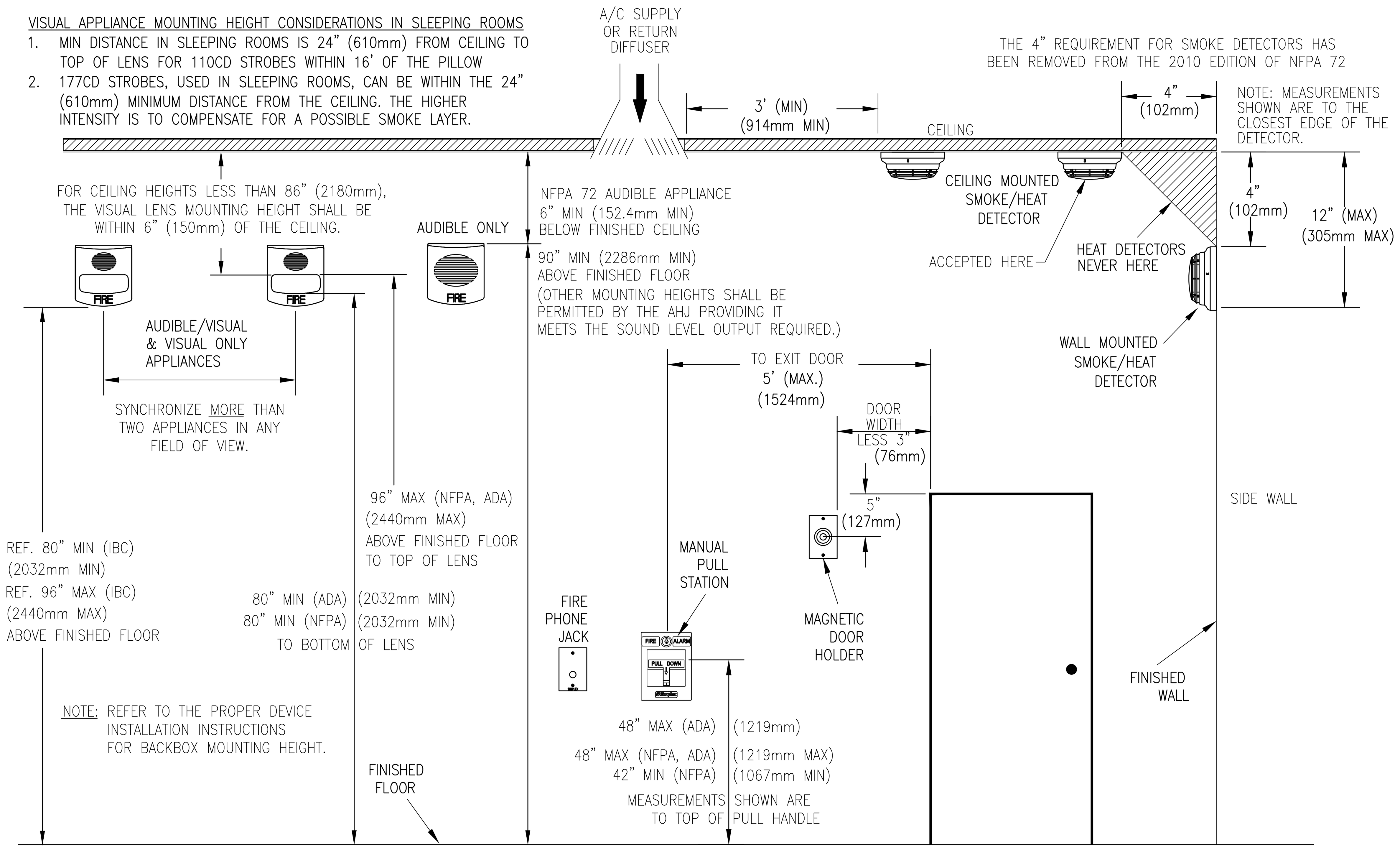

4010ES BACKBOX INSTALLATION

DESCRIPTION

THE BACKBOX CAN BE SURFACE OR SEMI-FLUSH MOUNTED TO THE WALL. USE SEPARATE CONDUIT ENTRANCES FOR POWER-LIMITED AND NON-POWER LIMITED WIRING.

AC SUPPLY, BATTERY SUPPLY AND CITY CONNECT WIRING ARE ALL NON-POWER LIMITED WIRING.

DIMENSIONS SHOWN ARE TYPICAL FOR ALL SURFACE AND SEMI-FLUSH INSTALLATIONS.

INSTRUCTIONS

1. REMOVE ELECTRONICS AND STORE IT IN A SAFE DRY AREA.
2. NO KNOCKOUTS PROVIDED. CUT CONDUIT/SERVICE ENTRANCE OPENINGS. REFER TO FIG.1 FOR PROPER LOCATIONS. CONDUIT PROTRUSION INTO BOX 1/2" MAX.
3. MOUNT BOX TO WALL: BOX MUST BE LEVEL AND PLUMB. FOR SURFACE MOUNT USE TEAR DROP AND CLEARANCE HOLES ON BACK SURFACE. FOR SEMI-FLUSH MOUNT: USE KNOCKOUTS ON SIDE WALL AND SCREW OR NAIL BOX TO WALL STUDS.
4. NEMA RATING: NEMA 1 – GENERAL PURPOSE.
5. IF PRESENT, USE WIRE MANAGEMENT BRACKETS ON BOX SIDES TO SECURE WIRE RUNS.
6. DO NOT LOCATE POWER-LIMITED WIRING IN THE SHADED AREAS OF THE BACKBOX, THIS AREA IS RESERVED FOR NON-POWER LIMITED CIRCUITRY SUCH AS AC POWER, BATTERIES AND CITY CONNECTION.

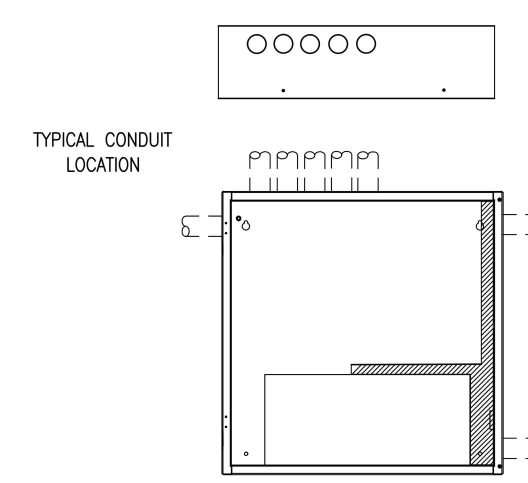

FIG. 1

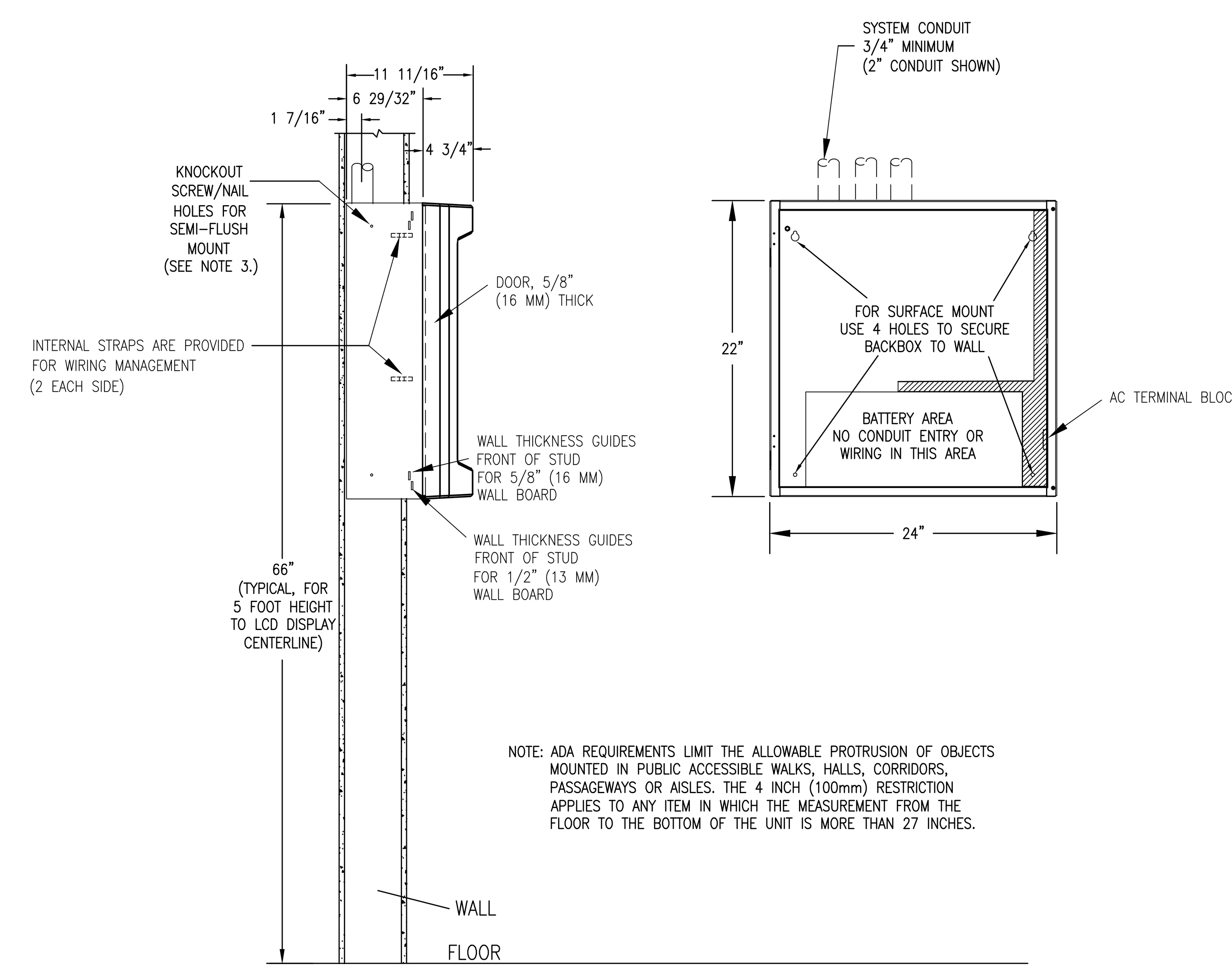

NOTE: ADA REQUIREMENTS LIMIT THE ALLOWABLE PROTRUSION OF OBJECTS MOUNTED IN PUBLIC ACCESSIBLE WALKS, HALLS, CORRIDORS, PASSAGEWAYS OR AISLES. THE 4 INCH (100mm) RESTRICTION APPLIES TO ANY ITEM IN WHICH THE MEASUREMENT FROM THE FLOOR TO THE BOTTOM OF THE UNIT IS MORE THAN 27 INCHES.

4606-9102 REMOTE ANNUNCIATOR

PRODUCT INFORMATION

FEATURES:

- UL LISTED
- FM APPROVED
- FLUSH MOUNT ON STANDARD ELECTRICAL BOXES
  MASONARY – 6 GANG RACO #965, 3 1/2" DEEP
  SINGLE GANG – 6 SINGLE GANG BOXES 3 1/2" DEEP (RACO #590 OR EQUAL)

SPECIFICATIONS:

- VOLTAGE: 24VDC NOMINAL
- CURRENT: ALARM 140mA
  SUPERVISORY 65mA
- OPERATING TEMPERATURE: 32° F TO 120° F (0° TO 49° C)
- HUMIDITY RANGE: UP TO 92% RH NON-CONDENSING @ 100° F (38° C)
- STANDARD TRIM: BEIGE (SUPPLIED WITH BOTH SLOTTED AND TAMPERPROOF SCREWS)
- TRIM DIMENSIONS 11 13/16"L X 4 1/2" W (300mm L X 114mm W)
- ASSEMBLY DEPTH: 1 5/16" (33mm), 1 1/2" @ TERMINAL BLOCK (38MM)

OPTIONS

- BRUSHED ALUMINUM TRIM: 4603-9111
- SURFACE BOX: 2975-9206

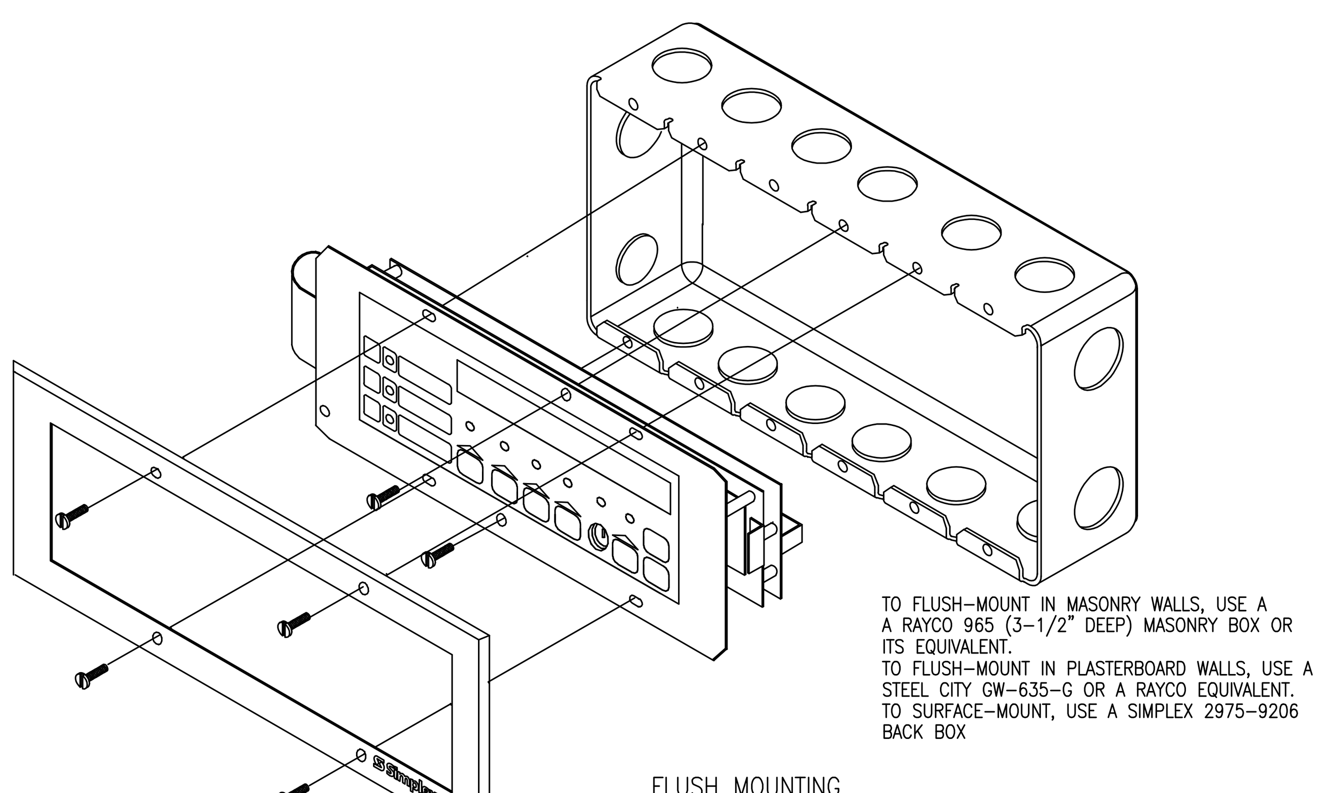

TO FLUSH-MOUNT IN MASONRY WALLS, USE A A RAYCO 965 (3-1/2" DEEP) MASONRY BOX OR ITS EQUIVALENT.
TO FLUSH-MOUNT IN PLASTERBOARD WALLS, USE A STEEL CITY GW-635-G OR A RAYCO EQUIVALENT.
TO SURFACE-MOUNT, USE A SIMPLEX 2975-9206 BACK BOX

FLUSH MOUNTING

NOTES:

1. ALL WIRING TO BE No. 18 AWG OR TO LOCAL CODE.
2. ALL WIRING SUPERVISED
3. WIRE TO BE 18 AWG TWISTED SHIELDED PAIR RECOMMENDED CONSULT SALES ENGINEERING FOR EXCEPTIONS.
   2500 FT ONE WAY MAX COMMUNICATION LINE POWER
   32 VDC MAX
   140 mA MAX
   1200 OR 9600 BAUD
4. WHEN WIRING LEAVES THE BUILDING, OVER VOLTAGE PROTECTORS ARE REQUIRED; USE 2081-9044 ONE IS INSTALLED WHERE IT LEAVE THE BUILDING AND ONE WHERE IT ENTERS THE NEXT BUILDING. TWO 2081-9044 (MAX)

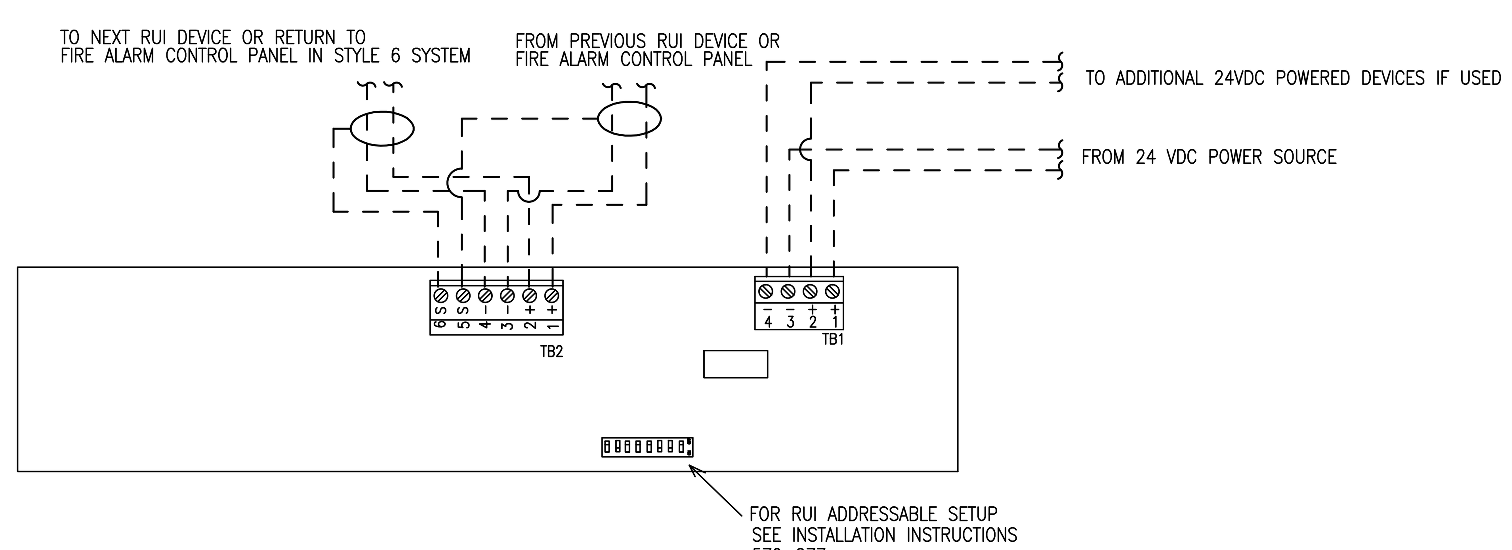

4098-9792 STANDARD SENSOR BASE

PRODUCT INFORMATION

FEATURES:

- UL LISTED, FM APPROVED
- TRUEALARM ANALOG SENSING PROVIDES DIGITAL TRANSMISSION OF ANALOG SENSOR VALUES VIA MAPNETII, OR IDNet SLC TWO WIRE COMMUNICATIONS
- FIRE ALARM CONTROL PANEL PROVIDES:
  –INDIVIDUAL SENSITIVITY SELECTION FOR EACH SENSOR
  –PEAK VALUE LOGGING ALLOWING ACCURATE ANALYSIS FOR SENSITIVITY SELECTION
  –AUTOMATIC ENVIRONMENTAL COMPENSATION
  –DISPLAY OF SENSITIVITY IN PERCENT PER FOOT
  –MULTISTAGE ALARM OPERATION
  –ABILITY TO DISPLAY AND PRINT DETAILED SENSOR INFORMATION IN PLAIN ENGLISH LANGUAGE
- PHOTOELECTRIC SMOKE SENSOR 4098-9714:
  SEVEN LEVELS OF SENSITIVITY FROM 0.2% TO 3.7%
- IONIZATION SMOKE SENSOR 4098-9717:
  FOUR LEVELS OF SENSITIVITY FROM 0.5% TO 1.7%.
- HEAT SENSOR 4098-9733:
  –RATE-OF-RISE TEMPERATURE DETECTION IS SELECTABLE AT THE CONTROL PANEL FOR EITHER 15°F OR 20°F PER MINUTE
  –FIXED TEMPERATURE SENSING IS INDEPENDENT OF RATE-OF-RISE AND PROGRAMMABLE TO OPERATE AT 135°F OR 155°F
  –TRUEALARM HEAT SENSORS CAN BE PROGRAMMED AS A UTILITY DEVICE TO MONITOR FOR TEMPERATURE EXTREMES IN THE RANGE FROM 32° F TO 120° F.
- UL STANDARD SPACING:
  –60 FT SPACING FOR 135° F
  –40 FT SPACING FOR 155° F
- INTEGRAL RED LED FOR POWER-ON (PULSING), OR ALARM OR TROUBLE (STEADY ON)
- BASE MOUNTED ADDRESS SELECTION:
  –ACCESSIBLE FROM FRONT (DIP SWITCH UNDER SENSOR)
  –ADDRESS REMAINS WITH ITS PROGRAMMED LOCATION
- FOR USE WITH SIMPLEX 4010, 4100, 4020, AND 4120 SERIES CONTROL PANELS.
- MAXIMUM QUANTITY OF DEVICES:
  –127 FOR 4020, 4100, 4120
  –250 FOR 4010, 4100
- MOUNTING: CEILING OR WALL
- COLOR : FROST WHITE
- BASE DIMENSIONS: 15/16" X 4-7/8"

SPECIFICATIONS:

- UL LISTED TEMPERATURE RANGE: 32°F TO 100°F
- OPERATING TEMPERATURE RANGE: 32°F TO 120°F
- HUMIDITY RANGE: 10% TO 95% RH
- PHOTOELECTRIC SENSOR AIR VELOCITY RANGE: 0–2000 FT/MIN
- IONIZATION SENSOR AIR VELOCITY RANGE: 0–300 FT/MIN
- WIRING CONNECTIONS: SCREW TERMINALS FOR IN/OUT WIRING, #18 TO #14 AWG
- COMMUNICATIONS MAPNETII/IDNet SLC: 1 ADDRESS PER BASE
  VOLTAGE (MAPNETII/IDNet SLC): 24–40VDC
  CURRENT: 400uA TYPICAL

DESCRIPTION:

TRUEALARM SENSOR BASES CONTAIN INTEGRAL ADDRESSABLE ELECTRONICS THAT CONSTANTLY MONITOR THE STATUS OF THE DETACHABLE PHOTOELECTRIC, IONIZATION, OR HEAT SENSORS. EACH SENSOR'S OUTPUT IS DIGITIZED AND TRANSMITTED TO THE SYSTEM FIRE ALARM CONTROL PANEL EVERY FOUR SECONDS. SINCE TRUEALARM SENSORS USE THE SAME BASE, DIFFERENT SENSOR TYPES CAN BE EASILY INTERCHANGED TO MEET SPECIFIC LOCATION REQUIREMENTS. THIS FEATURE ALLOWS INTENTIONAL SENSOR SUBSTITUTION DURING BUILDING CONSTRUCTION. WHEN CONDITIONS ARE TEMPORARILY DUSTY, INSTEAD OF COVERING THE SMOKE SENSORS. HEAT SENSORS MAY BE INSTALLED WITHOUT REPROGRAMMING THE CONTROL PANEL, ALTHOUGH THE CONTROL PANEL WILL INDICATE AN INCORRECT SENSOR TYPE, THE HEAT SENSOR WILL OPERATE AS A DEFAULT SENSITIVITY PROVIDING HEAT DETECTION FOR BUILDING PROTECTION AT THAT LOCATION.

WIRING:

1. ALL WIRING TO COMPLY WITH LOCAL CODE.
2. CONDUCTORS MUST TEST FREE OF ALL GROUNDS.
3. MAINTAIN CORRECT POLARITY
4. MAPNETII/IDNet SLC WIRING TO BE #18 AWG TWISTED SHIELDED PAIR
5. IF SHIELD IS PRESENT, CONNECT TO THE OUTGOING IDNet SLC SHIELD TO PROVIDE A CONTINUOUS SHIELD OVER THE LENGTH OF THE IDNet SLC CHANNEL. METHOD OF SPLICE DETERMINED BY AHJ.
6. REFER TO INSTALLATION INSTRUCTIONS (574-707)
7. REFER TO APPLICATION MANUAL (574-709)

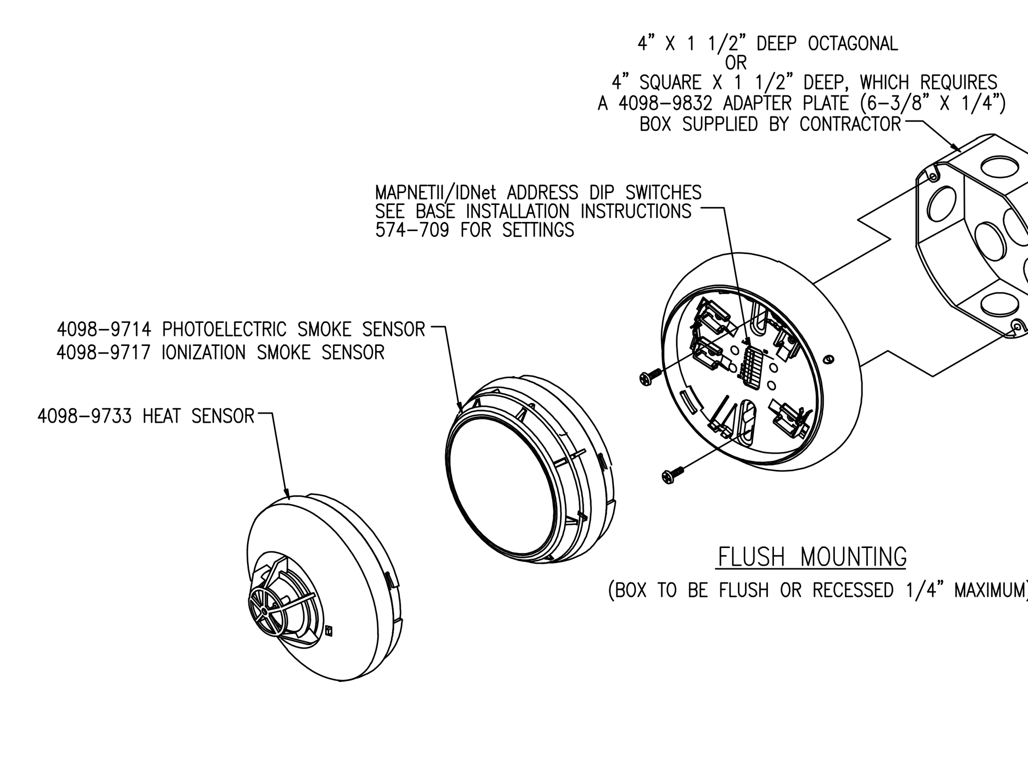

FLUSH MOUNTING

(BOX TO BE FLUSH OR RECESSED 1/4" MAXIMUM)

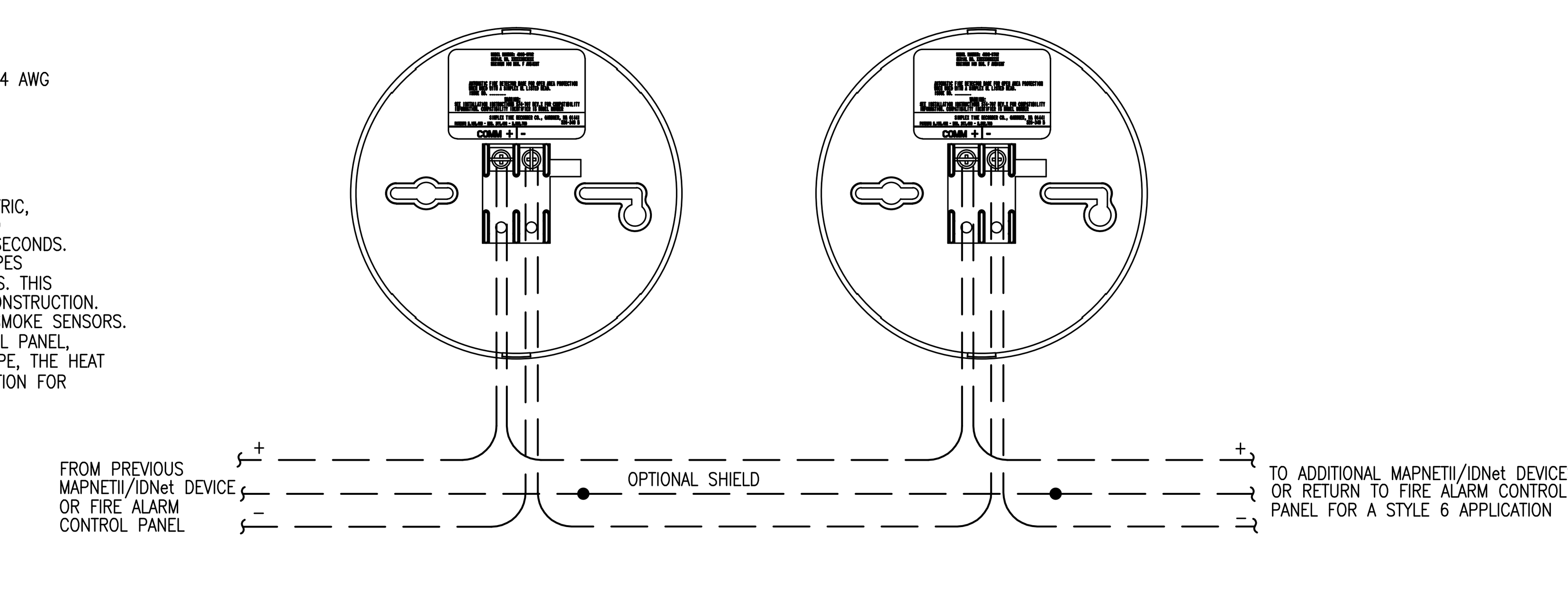

tyco SimplexGrinnell
Safer. Smarter. Tyco.™
DISTRICT - 147
20 THOMAS DRIVE
WESTBROOK, ME 04092
PHONE: 207-842-6440
FAX: 207-842-6439
SERVICE: 207-842-6440

PORTLAND FOOD CO-OP

PORTLAND FOOD CO-OP
290 CONGRESS STREET
PORTLAND, ME 04101

Revisions shown with # symbol

ISSUE LOG: MARK	DATE	CAD	CHK	DESCRIPTION

DRAWN BY:	G.LORION
CHECKED BY:	S. KALAFARSKI
ISSUE DATE:	9/17/14
JOB #:	
PROJECT #:	147:980171201

SIMPLEXGRINNELL © 2014

SYSTEM: FIRE ALARM SYSTEM

SHEET: WIRING TYPICALS

FA-701

FILE PATH: P:\2014\147\Portland Food Co-op\CAD\FA-701.dwg
LAST SAVED BY: GLORION
LAST PRINTED: 9/17/2014 2:48:15 PM
24" x 36" - Arch D Size

IMPORTANT NOTICE TO USER: By accepting or using this drawing and/or the information contained herein, the user agrees to the following terms and conditions: The electronic information in the drawing may be subject to intentional or unintentional alteration. Any use, reuse, copying modification or alteration of the information contained herein shall be at the sole risk of the user. This information may not be sold or transferred to any third party, used on other projects or additions to the project for which it was prepared, or used for completion of this project by any third party. SimplexGrinnell disclaims all liability for the use or reuse of altered files by the user or any third party and such use will be a user's sole risk. User shall, to the fullest extent permitted by law, defend, indemnify, and hold SimplexGrinnell harmless from any and all claims for loss, damage or injury arising directly or indirectly therefrom.