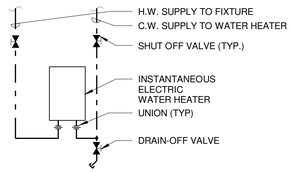


## L3 ELECTRIC INSTANTANEOUS WATER HEATER SCHEMATIC DWH-3

NTS

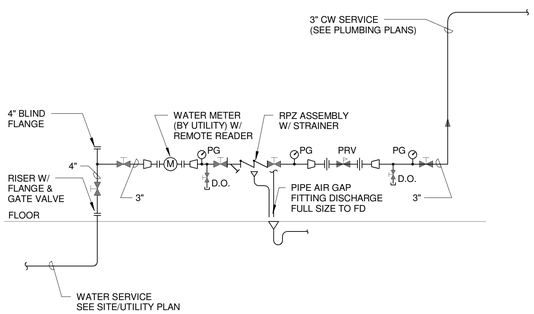


## H3 WATER SERVICE ENTRANCE SCHEMATIC

NTS

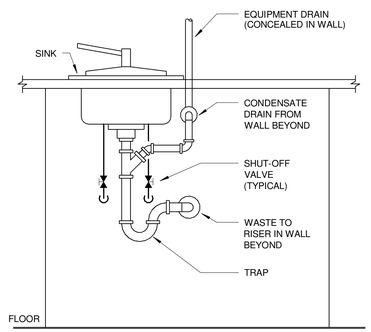


## E3 INDIRECT WASTE DETAIL

NTS

NOTE: ALL EXHAUST AIR PIPE AND FITTINGS BASED ON SCHEDULE 40 CPVC AND ALL COMBUSTION AIR PIPE AND FITTINGS BASED ON SCHEDULE 40 PVC.

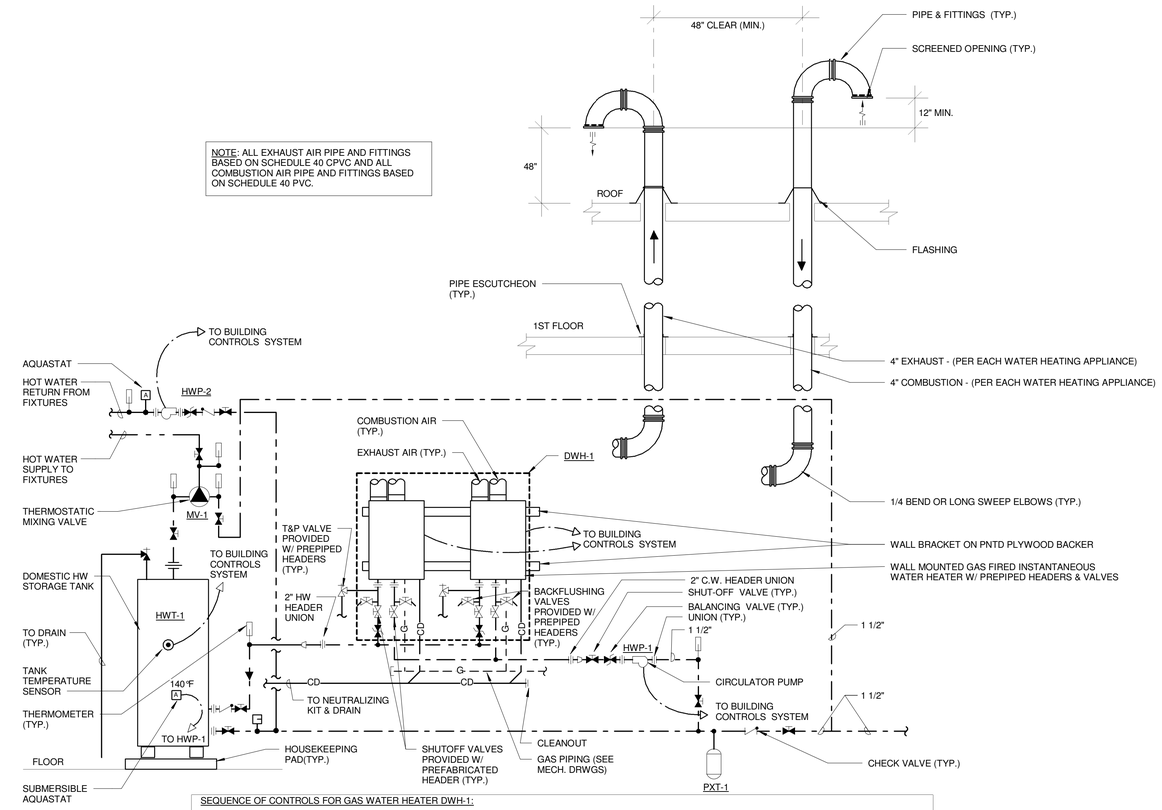


SEQUENCE OF CONTROLS FOR GAS WATER HEATER DWH-1:

a. EACH WATER HEATER SHALL BE EQUIPPED WITH WATER FLOW SERVO AND SHALL MODULATE FIRING RATE TO MATCH HOT WATER DEMAND BASED ON WATER TEMPERATURE DROP AND WATER PRESSURE DROP. ALL WATER HEATERS TO FIRE IN UNISON AND TO RAMP UP/DOWN IN UNISON TO MATCH SYSTEM HOT WATER DEMAND.
b. TEMPERATURE SET POINT FOR DOMESTIC HOT WATER PRODUCTION: 140°F (ADJUSTABLE).
c. EACH UNIT TO BE EQUIPPED WITH DOMESTIC PRIORITY SWITCH/MAINTENANCE INDICATION SWITCH FOR REMOTE COMMUNICATION WITH BUILDING AUTOMATED CONTROLS SYSTEM, FOR SYSTEM FUNCTIONAL AND ERROR ALARM MONITORING.

## F7 INSTANTANEOUS GAS FIRED WATER HEATER SCHEMATIC- DWH-1(KITCHEN)

NTS

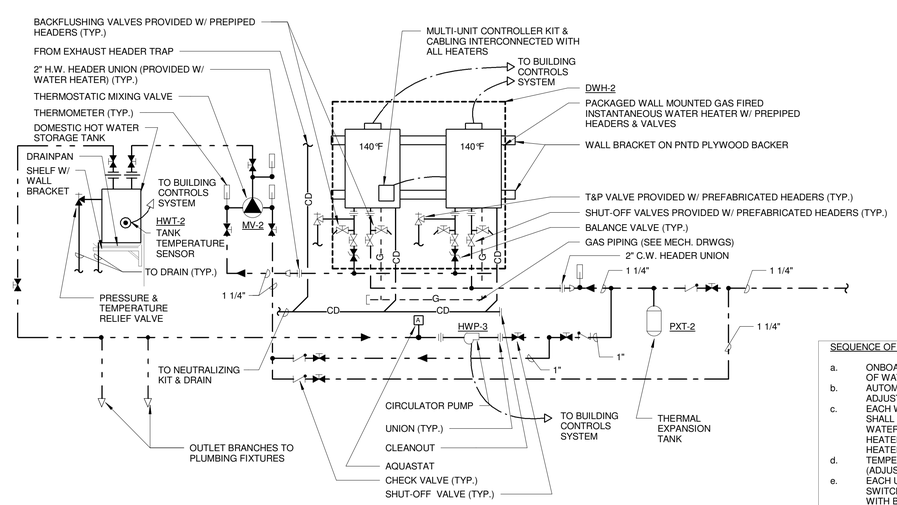


SEQUENCE OF CONTROLS FOR GAS WATER HEATER GWH-1:

a. ONBOARD CONTROLS SHALL PROVIDE MASTER/SLAVE OPERATION OF BANK OF WATER HEATERS.
b. AUTOMATIC LEAD/LAG ROTATION FOR EACH WATER HEATER. LEAD/LAG IS ADJUSTED FOR EVERY 10 CYCLES OF HEATER OPERATION.
c. EACH WATER HEATER SHALL BE EQUIPPED WITH WATER FLOW SERVO AND SHALL MODULATE FIRING RATE TO MATCH HOT WATER DEMAND BASED ON WATER TEMPERATURE DROP AND WATER PRESSURE DROP. EACH WATER HEATER TO MODULATE INDEPENDENTLY AND TO STAGE "ON" ADDITIONAL HEATERS TO MATCH SYSTEM HOT WATER DEMAND.
d. TEMPERATURE SET POINT FOR DOMESTIC HOT WATER PRODUCTION: 120°F (ADJUSTABLE).
e. EACH UNIT TO BE EQUIPPED WITH DOMESTIC PRIORITY SWITCH/MAINTENANCE INDICATION SWITCH FOR REMOTE COMMUNICATION WITH BUILDING AUTOMATED CONTROLS SYSTEM, FOR SYSTEM FUNCTIONAL AND ERROR ALARM MONITORING.

## A7 INSTANTANEOUS GAS FIRED WATER HEATER PIPING SCHEMATIC- DWH-2

NTS

| REV. | DESCRIPTION | DATE |
|---|---|---|
| 0 | ISSUED FOR BID | 06 JUNE 2016 |

STATE OF MAINE DANIEL C. MONSON No. 8977 LICENSED PROFESSIONAL ENGINEER 06.06.16


WBRC
ARCHITECTS ENGINEERS
WWW.WBRCAE.COM
BANGOR, MAINE 207-947-4511
PORTLAND, MAINE 207-828-4511
SARASOTA, FLORIDA 941-556-0757


PROJECT: ASYLUM

SHEET TITLE: PLUMBING DETAILS

WBRC CAD FILE: 407110 - ASYLUM DANCE CLUB - MECH.RVT

PROJECT No. 4071.10

SCALE: AS INDICATED

GRAPHIC SCALE: 0" 1"

PROJECT MANAGER: JRB

DRAWN BY: CGB

CHECKED BY: DMON

SHEET No. PL504

© COPYRIGHT 2016-WBRC

6/3/2016 4:20:56 PM
C:\Users\courtney.bunker\Documents\407110 - ASYLUM DANCE CLUB - MECH_courtney.bunker.rvt
REV 2015 04/22/16