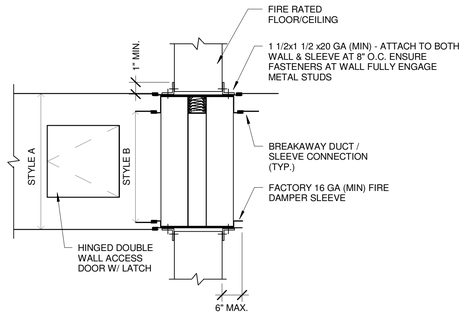

WALL FIRE DAMPER

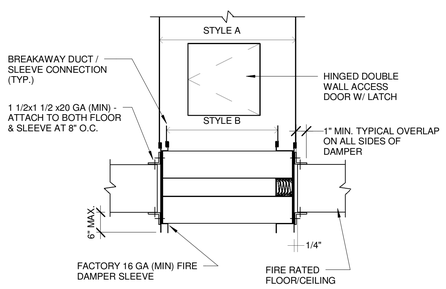

FLOOR/CEILING FIRE DAMPER

FIRE DAMPER NOTES:

1. MAKE OPENING 1/8" PER FOOT LARGER THAN DAMPER DIMENSIONS WITH 1/4" MIN. REQD.
2. DAMPER CONSTRUCTED AND TEST PER UL 555, UL LABELED, 1-1/2 HOUR FIRE RATING W/ 165 DEG. F FUSIBLE LINK
3. SEAL BETWEEN WALL AND SLEEVE W/ APPROVED FIRE STOP MATERIAL
4. REFER TO FIRE DAMPER INSTALLATION INSTRUCTION FOR SPECIFIC INSTALLATION REQUIRMENTS
5. FIRE DAMPERS SHALL BE TYPE "B" W/ CURTAIN OUT OF AIRSTREAM UNLESS OTHERWISE NOTED
6. TEST & INSPECT FIRE DAMPER FOR PROPER OPERATION & RESTORE AFTER TESTING.
7. PROVIDE DUCT ACCESS DOOR AT FIRE DAMPER

E1 FIRE DAMPER DETAIL

NTS

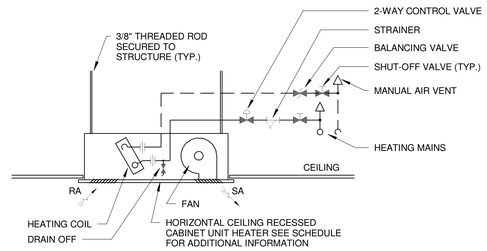

L5 CEILING CUH PIPING SCHEMATIC

NTS

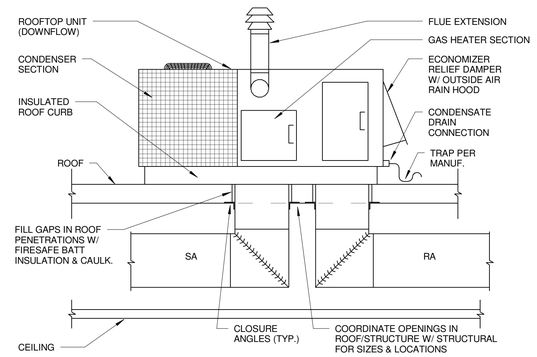

H5 DOWN DISCHARGE ROOFTOP UNIT DETAIL

NTS

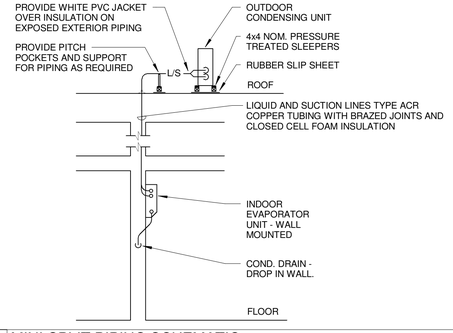

E5 MINI-SPLIT PIPING SCHEMATIC

NTS

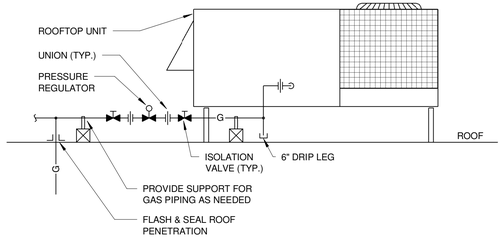

L9 RTU GAS PIPING SCHEMATIC

NTS

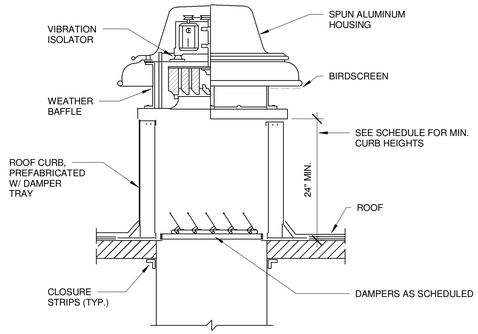

H9 DOWNBLAST EXHAUST FAN DETAIL

NTS

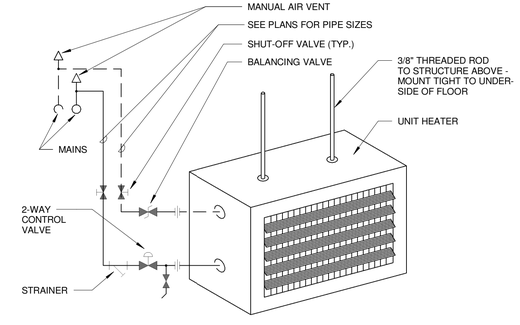

E9 UNIT HEATER PIPING SCHEMATIC

NTS

NOTE:
MAINTAIN MINIMUM 3' CLEAR TO DOORS & WINDOWS & 5' CLEAR TO SOURCES OF IGNITION.

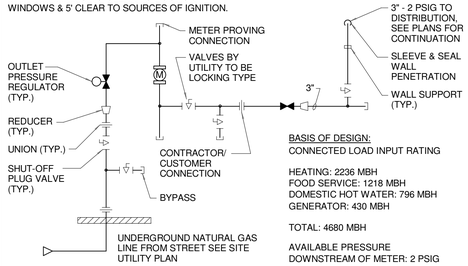

BASIS OF DESIGN:
CONNECTED LOAD INPUT RATING

HEATING: 2236 MBH
FOOD SERVICE: 1218 MBH
DOMESTIC HOT WATER: 796 MBH
GENERATOR: 430 MBH

TOTAL: 4680 MBH

AVAILABLE PRESSURE DOWNSTREAM OF METER: 2 PSIG

L13 GAS SERVICE PIPING SCHEMATIC

NTS

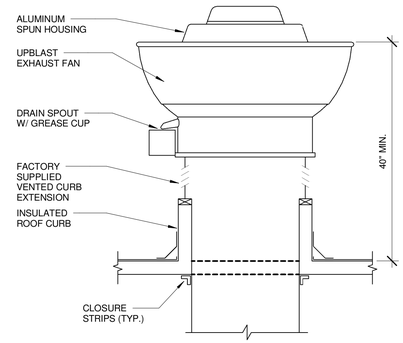

H13 UPBLAST EXHAUST FAN DETAIL

NTS

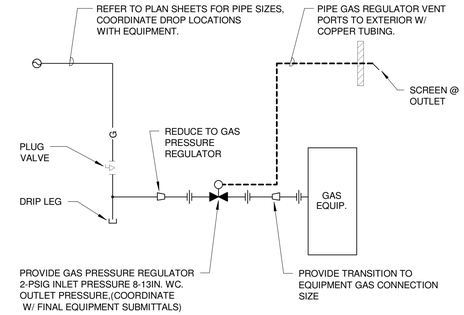

E13 EQUIPMENT GAS PIPING SCHEMATIC

NTS

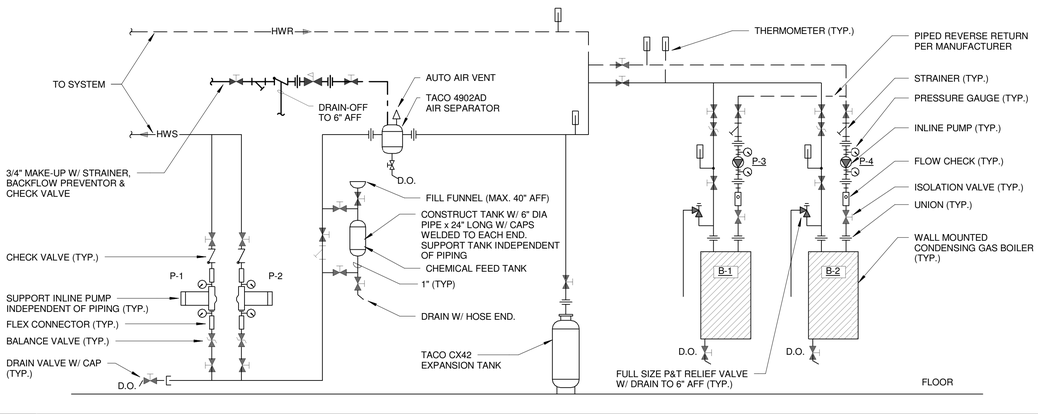

A1 BOILER PIPING SCHEMATIC

NTS

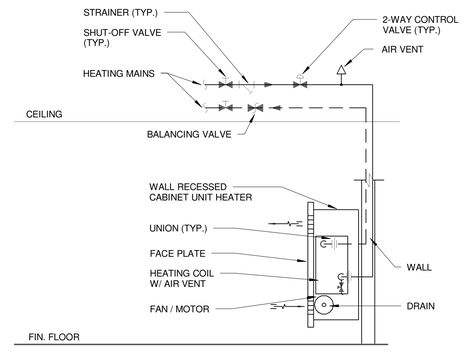

A9 FLOOR MOUNTED CUH PIPING SCHEMATIC

NTS

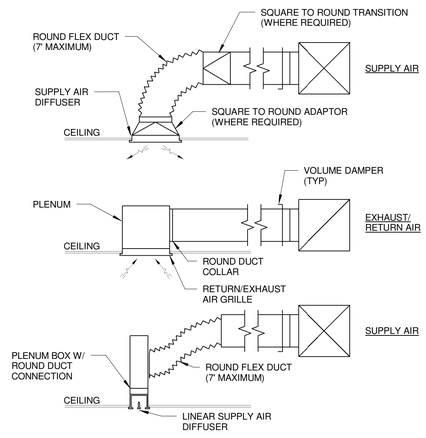

A13 TYP. DIFFUSER & GRILLE DETAILS

NTS

REV.	DESCRIPTION	DATE
0	ISSUED FOR BID	06 JUNE 2016

STATE OF MAINE
DANIEL G. OLSON
No. 9977
LICENSED
PROFESSIONAL ENGINEER
06.06.16

WBRC
ARCHITECTS ENGINEERS
WWW.WBRCAE.COM
BANGOR, MAINE 207-947-4511
PORTLAND, MAINE 207-828-4511
SARASOTA, FLORIDA 941-556-0757

PROJECT: ASYLUM

SHEET TITLE: MECHANICAL DETAILS

WBRC CAD FILE: 407110 - ASYLUM DANCE CLUB - MECH.RVT

PROJECT No.	4071.10
SCALE:	1/4" = 1'-0"
PROJECT MANAGER:	JRB
DRAWN BY:	CGB
CHECKED BY:	DMON

GRAPHIC SCALE 0" 1"

SHEET No. M-501

COPYRIGHT 2016-WBRC

6/3/2016 4:15:23 PM
C:\Users\courtney.bunker\Documents\407110 - ASYLUM DANCE CLUB - MECH_courtney.bunker.rvt
PAGE 2 OF 2 04/25/14