Reviewed for Code Compliance
Inspections Division
Approved with Conditions
03/07/17
Date:

STRIBUTION PIPING AS DICTATED BY THESE DRAWINGS.

2. ALL PIPING MUST BE SCHEDULE 40, BLACK IRON, CHROME-PLATED OR STAINLESS STEEL PIPE AND FITTINGS. DO NOT USE HOT-DIPPED GALVANIZED IRON PIPE OR FITTINGS IN THE AGENT DISTRIBUTION PIPING.

3. BEFORE ASSEMBLING THE PIPE AND FITTINGS, MAKE CERTAIN ALL ENDS ARE CAREFULLY REAMED AND BLOWN CLEAR OF CHIPS AND SCALE. THE INSIDE OF THE PIPE AND FITTINGS MUST BE FREE OF OIL AND DIRT.

4. THE DISTRIBUTION PIPING AND FITTING CONNECTIONS LOCATED IN OR ABOVE THE THE HOOD OR PROTECTED AREA, MUST BE SEALED WITH PIPE TAPE. WHEN APPLYING THE PIPE TAPE, START AT THE SECOND MALE THREAD AND WRAP THE TAPE (TWO TURNS MAXIMUM) CLOCKWISE AROUND THE THREADS, AWAY FROM THE PIPE OPENING. DO NOT ALLOW THE TAPE TO OVERLAP THE PIPE OPENING AS THE PIPE AND NOZZLES COULD BECOME PLUGGED. THREAD SEALANT OR COMPOUND MUST NOT BE USED AS IT COULD PLUG THE NOZZLES.

5. BRANCH TEES CAN BE USED TO CREATE MORE THAN ONE BRANCH AND CAN BE INSTALLED AS A THRU TEE, SIDE OUTLET TEE OR BULL TEE

6. STANDARD PIPE HANGERS OR PIPE CLAMPS SHALL BE USED FOR SUPPORT. THE MAXIMUM DISTANCE BETWEEN HANGERS SHALL NOT EXCEED 5 FEET.

7. HANGERS SHOULD BE PLACED BETWEEN ELBOWS WHEN THE DISTANCE IS GREATER THAN 2 FEET.

8. INSTALL THE CORRECT NOZZLE TO A PREDETERMINED AIM POINT AS SHOWN IN THESE DRAWINGS.

9. BEFORE INSTALLING BLOW-OFF CAPS ON NOZZLES, APPLY A SMALL AMOUNT OF DOW CORNING NO. 111 SILICONE GREASE ACROSS THE OPENING IN THE NOZZLE TIP AND ALSO A SMALL AMOUNT COATING THE EXTERIOR OF THE BLOW-OFF CAP. DO NOT FORCE SILICONE GREASE INTO THE NOZZLE TIP OPENING OR FILL THE BLOW-OFF CAP WITH GREASE.

10. MAKE CERTAIN A BLOW OFF CAP IS IN PLACE OVER EACH NOZZLE TIP. THESE BLOW-OFF CAPS ARE DESIGNED TO KEEP GREASE FROM BUILDING UP ON THE NOZZLE ORIFICE AND INHIBITING AGENT FLOW.

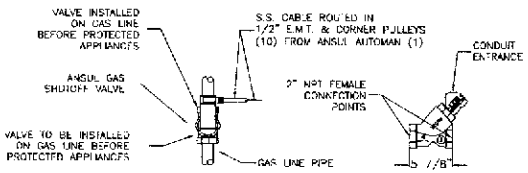

GAS SHUTOFF VALVE INSTALLATION DETAIL

GAS VALVE INSTALLATION NOTES

1. INSTALL 1/2 IN. CONDUIT AND PULLEY ELBOWS FROM THE AUTOMAN ENCLOSURE TO THE MECHANICAL GAS SHUTOFF VALVE.

2. BEGINNING AT THE AUTOMAN, THREAD THE END OF THE STAINLESS STEEL CABLE THROUGH THE HOLE IN THE AIR CYLINDER ROD.

3. FEED THE END OF THE STAINLESS STEEL CABLE THROUGH THE CONDUIT AND PULLEY ELBOWS.

4. REMOVE THE SIDE COVER ON THE GAS VALVE AND THREAD THE END OF THE STAINLESS STEEL CABLE THROUGH THE HOLE IN THE COCKING LEVER. SLIDE A STOP SLEEVE ONTO THE CABLE AND CRIMP. MAKE CERTAIN THAT THE CRIMP IS ON TOP OF THE TRIGGER WITH THE CABLE CURLED UNDER THE LEVER.

5. RAISE THE AIR CYLINDER ROD "UP" TO ITS MAXIMUM EXTENDED POSITION.

6. MANUALLY PULL THE CABLE TO REMOVE EXCESS SLACK. DO NOT ACTUATE THE MECHANICAL GAS VALVE. THE MECHANICAL GAS VALVE MUST BE COCKED AND THE AIR CYLINDER ROD EXTENDED "UP" TO ITS MAXIMUM EXTENSION BEFORE COMPLETING THE NEXT STEP.

7. SLIDE STOP SLEEVE AGAINST THE AIR CYLINDER ROD, MAKE CERTAIN ALL SLACK IS REMOVED FROM CABLE AND CRIMP SLEEVE. CUT OFF ANY EXCESS CABLE APPROXIMATELY 3/4 IN. FROM THE END OF THE STOP SLEEVE.

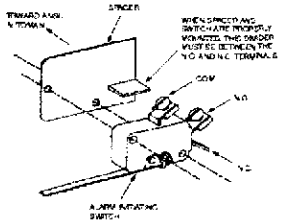

ALARM INITIATING SWITCH DETAIL

THE ALARM INITIATING SWITCH KIT (ANSUL PART NUMBER 423879 IS FIELD MOUNTED WITHIN THE ANSUL AUTOMAN ENCLOSURE. THE SWITCH MUST BE USED TO CLOSE A SUPERVISED ALARM CIRCUIT TO THE BUILDING MAIN FIRE ALARM PANEL WHEN THE ANSUL AUTOMAN ACTUATES. THIS ACTION WILL SIGNAL THE FIRE ALARM PANEL THAT THERE WAS A SYSTEM ACTUATION IN THE KITCHEN AREA.

THE SWITCH KIT CONTAINS ALL THE NECESSARY MOUNTING COMPONENTS ALONG WITH AN INSTRUCTION SHEET.

THE SWITCH IS RATED 50mA @ 28 VDC.

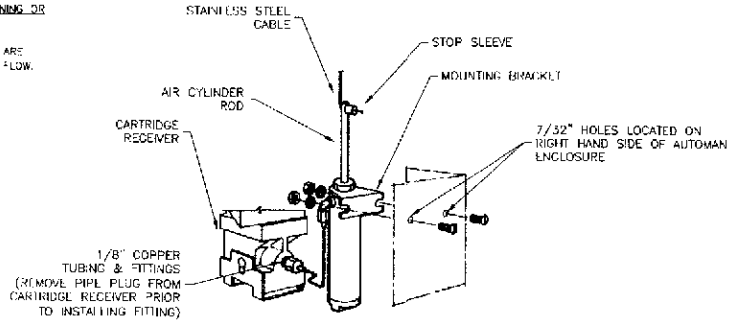

AIR CYLINDER DETAIL

NOTES: THE INFORMATION AND GRAPHIC DEPICTIONS ON THIS SHEET ARE DERIVED FROM INFORMATION OBTAINED IN A PUBLICATION TITLED "ANSUL DESIGN, INSTALLATION, RECHARGE AND MAINTENANCE MANUAL R-102 RESTAURANT FIRE SUPPRESSION SYSTEM (STANDARD UL 300 LISTED)" ANSUL PART NUMBER 416087-1".

IF ADDITIONAL TECHNICAL ASSISTANCE IS NEEDED CONTACT ANSUL, INC. 1 STANTON STREET, MARINETTE, WI 54143-2542 USA TELEPHONE NUMBER 1-715-735-7415 TECHNICAL ASSISTANCE PRESS 4.

System Information:
ANSUL R102 – 3G "WET"
CHEMICAL KITCHEN FIRE SUPPRESSION
SYSTEMS PROTECTING EXHAUST
HOODS & COOKING APPLIANCES

Client:
NOEL SULLIVAN
A MOVEABLE FEAST
431 CONGRESS STREET
PORTLAND, ME 0410'

Interstate FIRE PROTECTION
P.O. BOX 1005
NORTH CONWAY, NH 03860
P.O. BOX 187
GARDINER, ME 04345

"WET" CHEMICAL KITCHEN FIRE SUPPRESSION SYSTEM
PIPE SPECIFICATION & COMPONENT DETAIL

Proj. no:
CAD File:moveableFeastPort.dwg
Drawn by:M. STEWARD
Checked on:02/02/2017
Designed by:M. STEWARD
Checked by:S. GRAM
Approved by:
Project Leader:S. GRAM
See-Exs NOTED

Revisions: Date:
0 02/02/2017

SHEET: 02