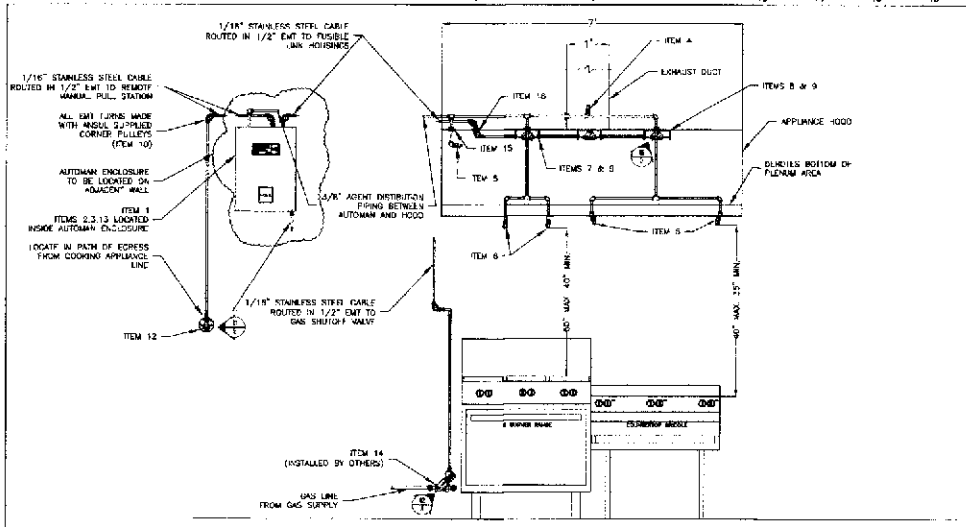

EQUIPMENT LAYOUT - ELEVATION VIEW

SCALE: 3/4 INCH = 1 FOOT

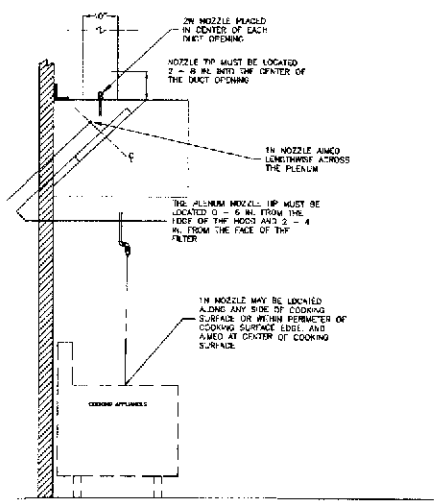

DUCT & PLENUM NOZZLE AIMING DETAIL

SCALE: 3/4 INCH = 1 FOOT

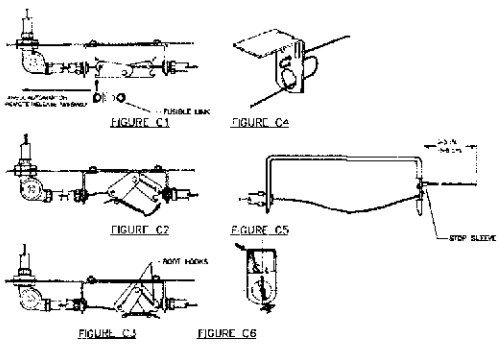

SCISSOR LINKAGE DETAIL DETAIL

SCALE: NOT TO SCALE

SCISSOR LINKAGE INSTRUCTIONS

1. FROM THE AUTOMAN ENCLOSURE, RUN 1/16 IN. STAINLESS STEEL WIRE ROPE THROUGH THE 1/2 IN. EMT, CORNER PULLEYS, AND DETECTOR BRACKETS TO THE TERMINAL DETECTOR. DO NOT ATTACH THE WIRE ROPE TO THE LOCKING CLAMP IN THE AUTOMAN AT THIS TIME.
2. FEED THE WIRE ROPE THROUGH THE TERMINAL DETECTOR BRACKET AS SHOWN IN FIGURE C4 AND INSTALL AND CRIMP A STOP SLEEVE APPROXIMATELY 2-3 INCHES FROM THE END OF THE WIRE ROPE (FIGURE C5).
3. APPLY TENSION TO THE END OF THE WIRE ROPE INSTALLED IN THE AUTOMAN ENCLOSURE BY HANGING A VICE GRIP ON THE EXCESS DURING INSTALLATION OF THE DETECTOR LINKAGE.
4. INSTALL THE DETECTOR SCISSOR ASSEMBLY AS SHOWN IN FIGURE C1. SLIGHTLY CRIMP THE TWO ASSEMBLY BOOT HOOKS OVER THE CABLE WITH PLIERS SO THAT THE CABLE IS CAPTURED UNDER EACH HOOK, BUT THE WHOLE ASSEMBLY CAN MOVE FROM SIDE TO SIDE. CENTER THE ASSEMBLY IN THE BRACKET.
5. HOOK THE FUSIBLE LINK ON THE AUTOMAN SIDE OF THE HOOK ASSEMBLY, THEN PULL UP THE FUSIBLE LINK TO THE OTHER SIDE AS SHOWN IN FIGURES C2 AND C3. THE SCISSOR HOOK ASSEMBLY WITH THE FUSIBLE LINK IN PLACE MUST BE LOCATED TOWARD THE TERMINAL DETECTOR SIDE OF THE BRACKET.
6. INSTALL THE LINKAGE AND FUSIBLE LINK IN THE REMAINDER OF THE DETECTOR BRACKETS. MAKE CERTAIN ALL DETECTOR LINKAGES ARE POSITIONED EITHER AGAINST THE FRONT OR BACK UPPER LIP OF THE FORMED DETECTOR BRACKET AS SHOWN IN FIGURE C6.

LEGEND - ANSUL BILL OF MATERIALS

ANSUL BILL OF MATERIALS			
ITEM	QTY	PART NO.	DESCRIPTION
1	1	430099	3 Gallon Tank w/ANSUL AUTOMAN Mechanical Reg. Release
2	1	79372	ANSULEX Low pH Wet Chemical Agent
3	1	426445	Cartridge, Carbon Dioxide, 101-20
4	1	439840	2W Nozzle
5	3	439836	1N Nozzle
6	1	44331	245 Nozzle
7	2	435547	Detector, Series (Scissor Linkage)
8	1	435546	Detector, Terminal (Scissor Linkage)
9	3	439008	360 deg F Fusible Link
10	10	423251	Corner Pulley, Compression
11	2	79825	Conduit Offset
12	1	434618	Remote Pull Station, Red (Without wire rope)
13	1	423879	Alarm Initiating Switch DPDT
14	1	59610	Gas Valve, Mechanical 2 in.
15	4	77285	Adaptor, 3/8 in. Quik-Seal
16	1	79153	Adaptor, 1/2 in. EMT Compression-Seal

DESIGN FLOW SUMMARY			
Coverage	Overall Dimensions	Nozzle	Flow Points
Hood	84 x 38 in.	1N	1
Duct: Square	12 x 10 in.	2W	2
Griddle	36 x 36 in	1N	1
Griddle	36 x 36 in	1N	1
6 Burner Range	36 x 36 in	245	2
6 Burner Range	36 x 36 in	245	1
TOTAL FLOW POINTS			**8**

SYSTEM DESCRIPTION & SEQUENCE OF OPERATION

1. THE SYSTEM SHALL BE AN ANSUL R102 RESTAURANT FIRE SUPPRESSION SYSTEM AS MANUFACTURED BY ANSUL, INC., 1 STANTON STREET, MARINETTE, WI 54143-2542A. THE SYSTEM SHALL BE PRE-ENGINEERED.
2. THE INSTALLATION SHALL COMPLY WITH THE FOLLOWING CODES AND STANDARDS:
   - 2.1 NFPA 17A, "STANDARD FOR WET CHEMICAL EXTINGUISHING SYSTEMS", LATEST EDITION.
   - 2.2 NFPA 96, "STANDARD FOR VENTILATION CONTROL AND FIRE PROTECTION OF COMMERCIAL COOKING OPERATIONS", LATEST EDITION.
   - 2.3. THE EQUIPMENT MANUFACTURER'S PUBLISHED INSTRUCTIONS.
   - 2.4. STATE FIRE PREVENTION CODES.
   - 2.5. THE REQUIREMENTS OF THE LOCAL AUTHORITY HAVING JURISDICTION.
3. THE SYSTEM SHALL PROVIDE FIRE PROTECTION FOR RESTAURANT COOKING APPLIANCES, EXHAUST HOODS AND CONNECTED DUCTS.
4. DETECTION AND AUTOMATIC SYSTEM ACTUATION SHALL BE ACHIEVED WITH FUSIBLE LINK HEAT DETECTORS INSTALLED IN THE HOOD PLENUM AREA, OVER THE PROTECTED COOKING APPLIANCES AND ACROSS THE HOOD-DUCT OPENING.
5. MANUAL RELEASE SHALL BE ACHIEVED BY A LOCAL MANUAL RELEASE CONTROL BY A CABLE OPERATED MANUAL RELEASE STATION INSTALLED NEAR AN EGRESS FROM THE AREA COOKING APPLIANCES ARE LOCATED.
6. WHEN EITHER A FUSIBLE LINK SEPARATES DUE TO FIRE OR A MANUAL RELEASE IS OPERATED, THE R102 AUTOMAN SHALL CAUSE THE FOLLOWING EVENTS TO OCCUR:
   - 6.1. THE R102 AUTOMAN GOES INTO THE "RELEASED" POSITION.
   - 6.2. THE SYSTEM ACTUATION NITROGEN OR CARBON DIOXIDE CARTRIDGE RELEASES PRESSURIZED NITROGEN OR CARBON DIOXIDE THROUGH A HIGH PRESSURE HOSE TO A REGULATOR AND INTO THE AGENT STORAGE TANK. THE ACTUATION MEDIUM PRESSURIZES THE CONTENTS OF THE AGENT SUPPLY TANK, RELEASING THE WET CHEMICAL AGENT INTO THE DISCHARGE PIPING NETWORK TO THE DISCHARGE NOZZLES.
   - 6.3. A SNAP-ACTION MICROSWITCH SHALL CHANGE STATE AND CAUSE THE PROTECTED COOKING APPLIANCES TO DE-ENERGIZE AND SHUT DOWN ALL MAKE-UP AIR TO HOOD SYSTEM. EXHAUST FANS SHALL REMAIN ON.
   - 6.4. A SNAP-ACTION, TERMINAL TYPE MICROSWITCH SHALL CHANGE STATE, SENDING A SIGNAL TO THE BUILDING LIFE-SAFETY SYSTEM.

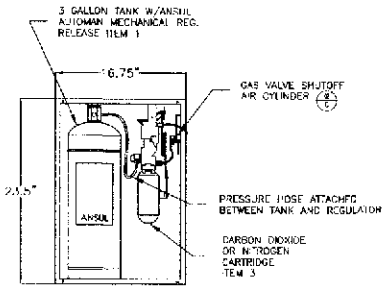

AUTOMAN RELEASE DETAIL

SCALE: NOT TO SCALE

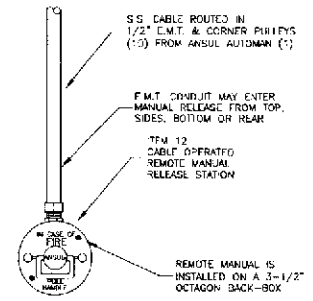

REMOTE MANUAL RELEASE DETAIL

SCALE: NOT TO SCALE

NOTES: THE INFORMATION AND GRAPHIC DEPICTIONS ON THIS SHEET ARE DERIVED FROM INFORMATION OBTAINED IN A PUBLICATION TITLED "ANSUL DESIGN, INSTALLATION, RECHARGE AND MAINTENANCE MANUAL R 102 RESTAURANT FIRE SUPPRESSION SYSTEM (STANDARD UL 300 LISTED)" ANSUL PART NUMBER 418087-11.

IF ADDITIONAL TECHNICAL ASSISTANCE IS NEEDED CONTACT ANSUL, INC. 1 STANTON STREET, MARINETTE, WI 54143-2542 USA TELEPHONE NUMBER: 1-715-735-7415 TECHNICAL ASSISTANCE PRESS 4

System Information:	Client:
ANSUL MODEL R102 - 3G "WET"	NOEL SULLIVAN
CHEMICAL KITCHEN FIRE SUPPRESSION	A MOVEABLE FEAST
SYSTEM PROTECTING AN EXHAUST	431 CONGRESS STREET
HOOD & COOKING APPLIANCES	PORTLAND, ME 04101

Interstate FIRE PROTECTION
P.O. BOX 1005
NORTH CONWAY, NH 03860
P.O. BOX 187
GARDINER, ME 04345

"WET" CHEMICAL KITCHEN FIRE SUPPRESSION SYSTEM INSTALLATION PLAN

Proj. no.:
CAD File: Movenbick Fire Prot.dwg
Drawn by: M. SIBNARD
Created on: 02/02/2017
Designed by: M. SIBNARD
Checked by: S. CRAM
Approved by:
Project Lead: S. CRAM
Scale: AS NOTED

Revisions: Date:
0 02/02/2017

SHEET: 01