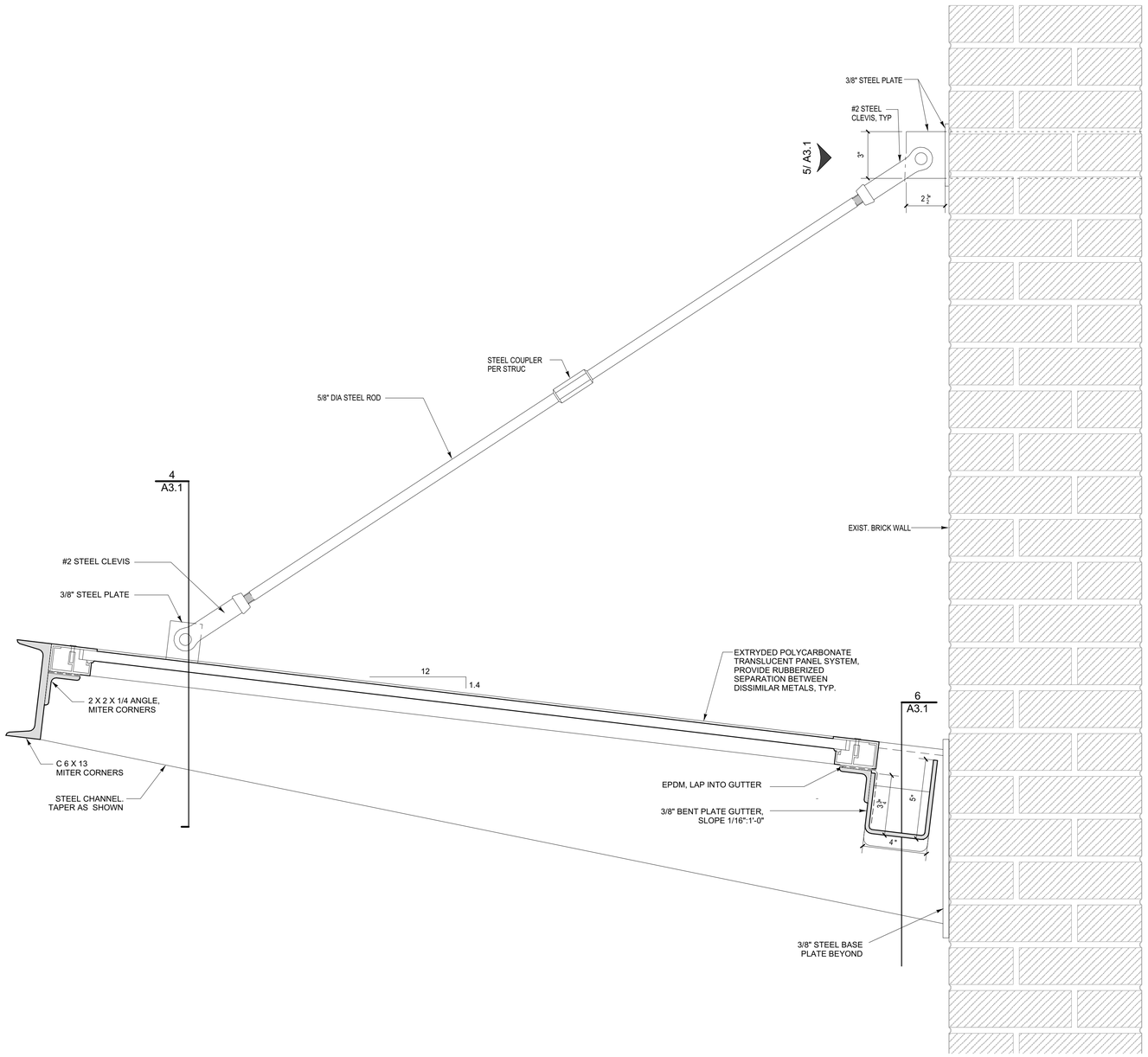

3 **ENTRY CANOPY SECTION DETAIL**
3" = 1'-0"

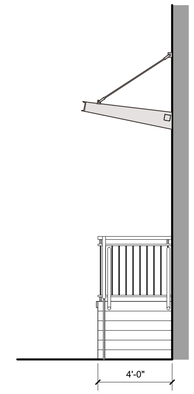

2 **CANOPY WEST ELEVATION**
1/4" = 1'-0"

1 **CANOPY NORTH ELEVATION**
1/4" = 1'-0"

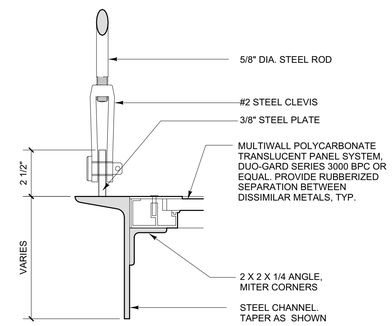

4 **CANOPY FRAME DETAIL**
3" = 1'-0"

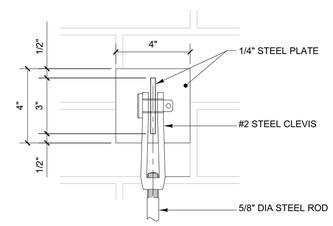

5 **CANOPY FRAME DETAIL**
3" = 1'-0"

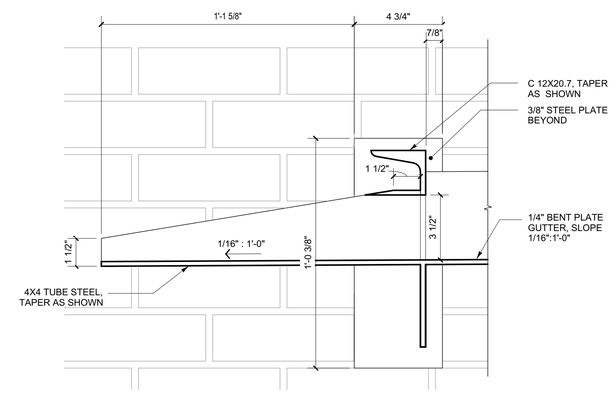

6 **CANOPY FRAME DETAIL**
3" = 1'-0"

Approved for Historic Preservation Certificate of Appropriateness
Date: 03/03/16

Winton Scott Architects
5 Milk Street
Portland, Maine 04101
207 774 4811
www.wintonscott.com

Architecture / Planning
Preservation Architecture
Interior Architecture

PLANNING BOARD SUBMISSION 01/08/16

Structural Engineer
Strucutral Integrity Consulting Engineers, Inc.

Mechanical / Electrical Engineer
Bennett Engineering

Owner
JJR 443 Congress, LLC

443 Congress

Portland, Maine

North Entrance Canopy Detail

scale as shown

A 3.1

January 08, 2016