Architectural Testing

Approved for Historic Preservation
Certificate of Appropriateness
Date: 03/03/16

TEST REPORT

Report No.: B8036.02-250-44

Rendered to:

Universal Window and Door, LLC
Marlborough, Massachusetts

PRODUCT TYPE: Aluminum Double Hung Window
SERIES/MODEL: 400 Series

SPECIFICATION: AAMA/WDMA/CSA 101/I.S.2/A440-08, *NAFS - North American Fenestration Standard/Specification for Windows, Doors, and Skylights*

Title	Summary of Results
Primary Product Designator	Class CW-PG45- 1524x2515 (60x99)
Design Pressure	±2160 Pa (±45.11 psf)
Air Infiltration	0.2 L/s/m^2 (0.03 cfm/ft^2)
Water Penetration Resistance Test Pressure	360 Pa (7.52 psf)

Test Completion Date: 04/02/2012

Reference must be made to Architectural Testing, Inc. Report No. B8036.02-250-44, dated 06/13/12 for complete test specimen description and detailed test results.

1.0 Report Issued To: Universal Window and Door, LLC
303 Mechanic Street
Marlborough, Massachusetts 01752

2.0 Test Laboratory: Architectural Testing, Inc.
10 Tracy Road
Chelmsford, Massachusetts 01824
978-244-9300

3.0 Project Summary:

3.1 Product Type: Aluminum Double Hung Window

3.2 Series/Model: 400 Series

3.3 Compliance Statement: Results obtained are tested values and were secured by using the designated test methods. The specimen tested successfully met the performance requirements for a **Class CW-PG45- 1524x2515 (60x99)** rating.

3.4 Test Dates: 03/19/12 - 04/02/12

3.5 Test Record Retention End Date: All test records for this report will be retained until June 13, 2016.

3.6 Test Location: Architectural Testing, Inc. test facility in Chelmsford, Massachusetts.

3.7 Test Sample Source: The test specimen was provided by the client. Representative samples of the test specimen will be retained by Architectural Testing for a minimum of four years from the test completion date.

3.8 Drawing Reference: The test specimen drawings have been reviewed by Architectural Testing and are representative of the test specimen reported herein. Test specimen construction was verified by Architectural Testing per the drawings located in Appendix A. Any deviations are documented herein or on the drawings.

3.9 List of Official Observers:

Name	Company
Paul Weisblatt	Universal Window and Door, LLC
Forrest Mitchell	Universal Window and Door, LLC
J.P. McDonald	Architectural Testing, Inc.
Brian Philcrantz	Architectural Testing, Inc.

4.0 Test Specification:

AAMA/WDMA/CSA 101/I.S.2/A440-08, *NAFS - North American Fenestration Standard/Specification for Windows, Doors, and Skylights*

5.0 Test Specimen Description:

5.1 Product Sizes:

Overall Area: 3.8 m² (41.3 ft²)	**Width**		**Height**	
	millimeters	**inches**	**millimeters**	**inches**
Overall size	1524	60	2515	99
Exterior sash	1435	56-1/2"	1251	49-1/4"
Interior sash	1461	57-1/2"	1251	49-1/4"
Screen	1426	56-1/8"	1257	49-1/2"

5.2 Frame Construction:

Frame Member	**Material**	**Description**
Head, sill and jambs	Aluminum	Thermally broken extruded aluminum

	Joinery Type	**Detail**
All corners	Coped, butted and sealed	One #8 x 1” pilot screw in each corner

5.3 Sash Construction:

Sash Member	**Material**	**Description**
Rails and stiles	Aluminum	Thermally broken extruded aluminum

	Joinery Type	**Detail**
All corners	Coped and butted	One #8 x 1” pilot screw in each corner

5.0 Test Specimen Description: (Continued)

5.4 Weatherstripping:

Description	Quantity	Location
Rubber bulb gasket	1 row	Sill
0.270" x 0.250" Polypile	2 row	Upper sash - top rail; lower sash - meeting rail
0.270" x 0.250" Polypile	1 rows	Upper sash – top rail; head - sash pocket
0.270" x 0.230" Polypile	1 row	Lower sash - sill riser and stiles
0.270" x 0.230" Polypile	2 row	Upper sash – stiles
0.270" x 0.250' Triple fin	1 row	Lower sash - stiles

5.5 Glazing: *No conclusions of any kind regarding the adequacy or inadequacy of the glass in any glazed test specimen can be made.*

Glass Type	Spacer Type	Interior Lite	Exterior Lite	Glazing Method
1" IG	Foil backed structural foam	3/16"	3/16"	Dry glazed in a vinyl U-channel

5.6 Drainage: A sloped sill was utilized.

5.7 Hardware:

Description	Quantity	Location
Sweep lock with keepers	2	14″ inches from edge of meeting rail
Metal tilt latch	4	Ends of interior meeting rail and top rail
Hybrid balance	4	Two per jamb
Anti-bow pins	4	Center of stiles, top and bottom sash
Snap lock	2	Top rail 3″ from each end
Metal pivot bar	4	Exterior meeting rail and bottom rail ends

5.0 Test Specimen Description: (Continued)

5.8 Reinforcement: No reinforcement was utilized.

5.9 Screen Construction:

Frame Material	Corner Construction	Mesh Type	Mesh Attachment Method
Aluminum	Mitered and keyed	Fiberglass	Flexible vinyl spline

6.0 Installation:

The specimen was installed into a Spruce-Pine-Fir wood buck. The rough opening allowed for a 1/4" shim space. The exterior perimeter of the window was sealed with silicone.

Location	Anchor Description	Anchor Location
Jambs	3" aluminum installation clip attached to the buck with two #8 x 1″ self-tapping screws and to the window with #8 x 1/2 ″ self-tapping pan head screws	5" from each corner, spaced 15″ on center
Head and sill	Continuous aluminum installation clip attached to the buck with two #8 x 1″ self-tapping screws and to the window with #8 x 1/2 ″ self-tapping pan head screws	Continuous across head and sill
Head, sill , jambs	Aluminum nail fin attached to the buck with 1-1/2″ self-tapping screw	5" from each corner, spaced 15″ on center

7.0 Test Results: The temperature during testing was 13°C (56°F). T tabulated as follows:

Title of Test	Results	Allowed	Note
Operating Force, per ASTM E 2068	Initiate motion: 133 N (30 lbf) Maintain motion: 178 N (40 lbf) Latches: 49 N (11 lbf)	Report Only 200 N (45 lbf) max. 111 N (25 lbf) max.	
Air Leakage, Infiltration per ASTM E 283 at (1.57 psf)	0.2 L/s/m^2 (0.03 cfm/ft^2)	1.5 L/s/m^2 (0.3 cfm/ft^2) max.	1
Water Penetration, per ASTM E 547 and ASTM E 331	N/A	N/A	2
Uniform Load Deflection, per ASTM E 330	N/A	N/A	2
Uniform Load Structural, per ASTM E 330	N/A	N/A	2
Forced Entry Resistance, per ASTM F 588, Type: A - Grade: 10	Pass	No entry	
Deglazing, per ASTM E 987 Operating direction, 320 N (70 lbf) Remaining direction, 230 N (50 lbf)	Pass Pass	Meets as stated Meets as stated	

7.0 Test Results: (Continued)

Optional Performance			
Water Penetration, per ASTM E 547 at 7.52 psf	Pass	No leakage	3
Uniform Load Deflection, per ASTM E 330 taken at meeting rail			
+2160 Pa (+45.11 psf)	7.4 mm (0.29")	8.1 mm (0.32") max.	
-2160 Pa (-45.11 psf)	8.1 mm (0.32")	8.1 mm (0.32") max.	4, 5, 6
Uniform Load Structural, per ASTM E 330 taken at meeting rail			
+3240 Pa (+67.67 psf)	0.5 mm (0.02")	4.3 mm (0.17") max.	
-3240 Pa (-67.67 psf)	0.3 mm (0.01")	4.3 mm (0.17") max.	5, 6

Note 1: The tested specimen meets (or exceeds) the performance levels specified in ANSI/AAMA/NWWDA 101/I.S.2-97 for air infiltration.

Note 2: The client opted to start at a pressure higher than the minimum required. Test results are reported under Optional Performance.

Note 3: With and without insect screen.

Note 4: The deflections reported are not limited by ANSI/AAMA/NWWDA 101/I.S.2-97 for this product designation. The deflection data is recorded in this report for special code compliance and information only.

Note 5: Loads were held for 10 seconds.

Note 6: Tape and film were used to seal against air leakage during structural testing. In our opinion, the tape and film did not influence the results of the test.

Approved for Historic Preservation
Certificate of Appropriateness
Date: 03/03/16

Architectural Testing will service this report for the entire test record ret
Test records that are retained such as detailed drawings, datasheets,
samples of test specimens, or other pertinent project documentation will be retained by Architectural Testing, Inc. for the entire test record retention period.

This report does not constitute certification of this product nor an opinion or endorsement by this laboratory. It is the exclusive property of the client so named herein and relates only to the specimen tested. This report may not be reproduced, except in full, without the written approval of Architectural Testing, Inc.

For ARCHITECTURAL TESTING, Inc.

Digitally Signed for: Brian Philcrantz by Diane Robitaille

Brian Philcrantz
Technician

Digitally Signed by: JP McDonald

J.P. McDonald
Director-Regional Operations

BP:JPM:dr

Attachments (pages): This report is complete only when all attachments listed are included.
Appendix-A: Drawings (10)

This report produced from controlled document template ATI 00438, issued 01/31/12.

Revision Log

Rev. #	Date	Page(s)	Revision(s)
0	06/13/12	N/A	Original Report Issue
1	08/21/12	Page 1	Corrected test retention date
		Page 3	Changed Glass Type dimension to 1"

Appendix A

Drawings

Architectural Testing

Test sample complies with these details.
Deviations are noted.

Report# B8036.01 + B8036.02
Date 4/18/12 Tech BJ

Approved for Historic Preservation
Certificate of Appropriateness
Date: 03/03/16

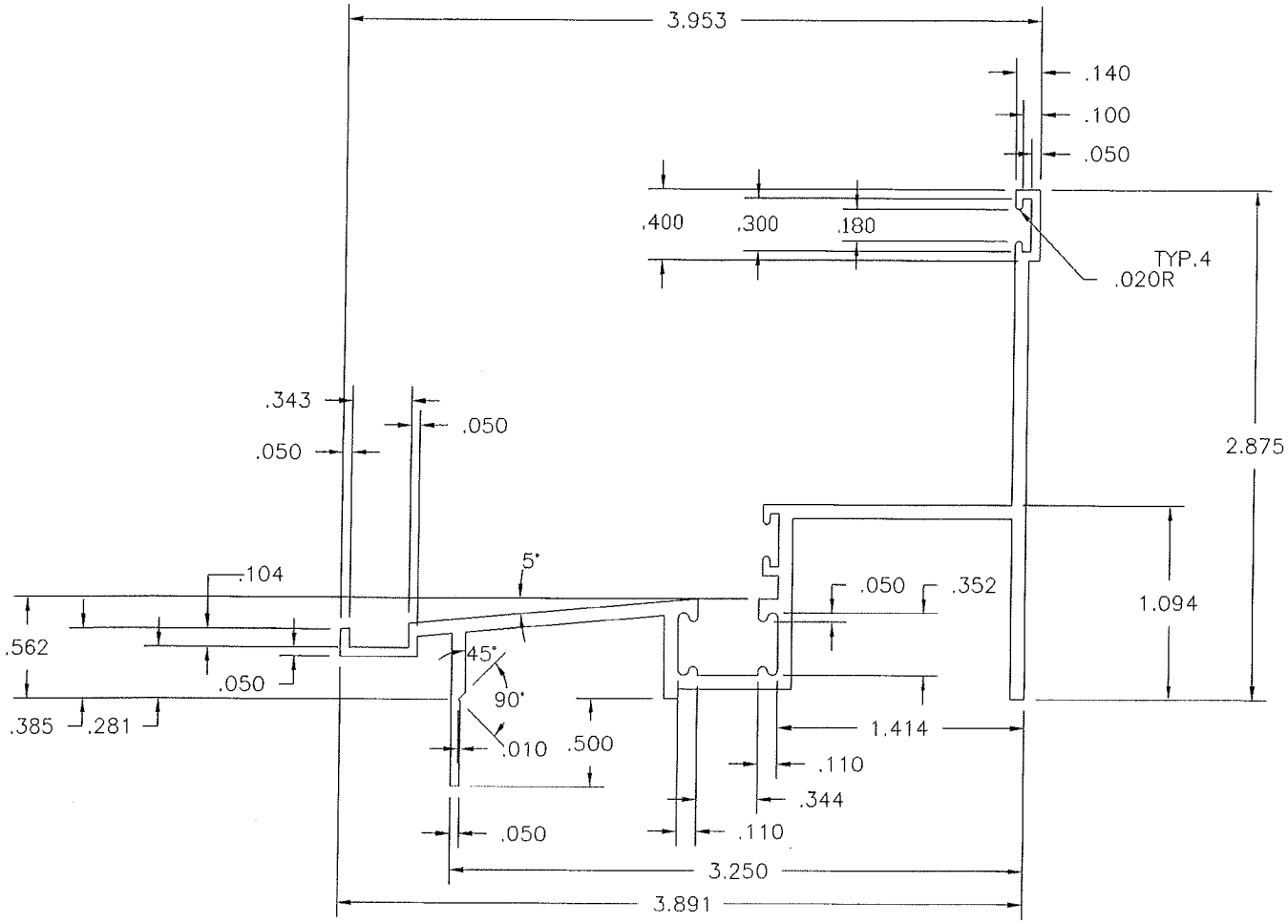

UNSPECIFIED WALLS	.078	CIRCLE SIZE	3-4
UNSPECIFIED RADII			
BREAK CORNERS	.015R		
EST. AREA	.730	EST. PERIMETER	20.307
EST. WT. PER FT.	.876	FACTOR	23

STANDARD TOLERANCES FOR EXTRUDED PRODUCTS APPLY UNLESS SPECIFICALLY SHOWN OTHERWISE

REVISIONS	DATE
REDRAWN W/ NO REVISIONS	9-27-99

SOLID ■ HOLLOW ☐ SEMI HOLLOW ☐
TUBE ☐ BAR ☐ ROD ☐

SILVER CITY ALUMINUM CORPORATION
Custom Aluminum Extrusion
704 WEST WATER STREET TAUNTON, MA. 02780

CUSTOMER: UNIVERSAL ALUMINUM
CITY: MARLBORO STATE: MA
APPLICATION: SILL (400 SERIES)

DIE DATA		BILLET DATA	
TYPE	SOLID	TYPE	
SIZE	9x2w3/4"POCKET	SIZE	
BACKER	1S-9A-5617		
BOLSTER	1B - 1	RUNOUT	

SCALE 1 : 1	DRAWN JCH
DATE 9-12-94	TRACED EI
MAT'L 6063-T5	CK'D
CUST. NO. 3171	

Architectural Testing

Test sample complies with these details.
Deviations are noted.

Report# B8036.01 + B8036.02
Date 4/18/12 Tech BB

Approved for Historic Preservation
Certificate of Appropriateness
Date: 03/03/16

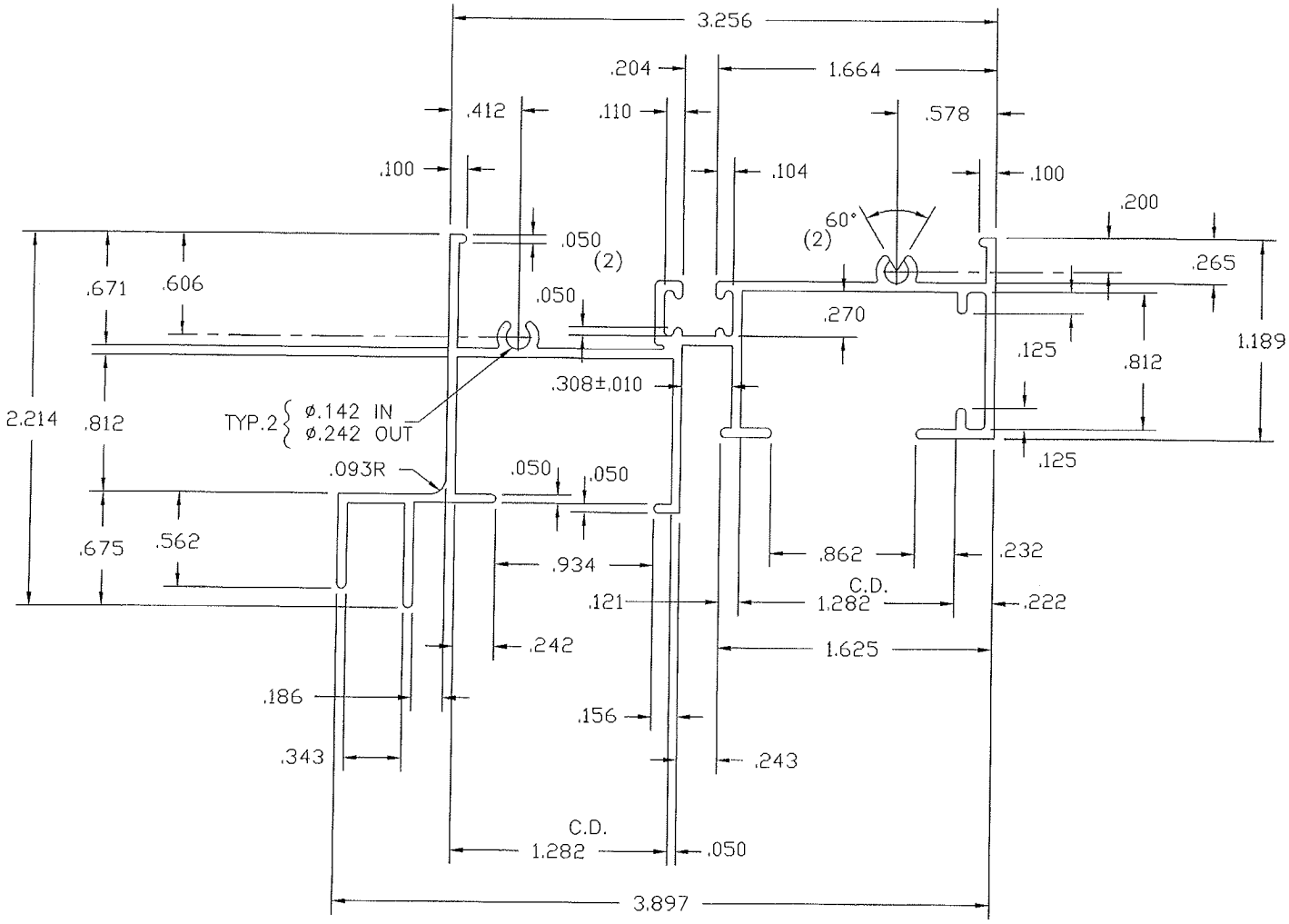

UNSPECIFIED WALLS .056 UNSPECIFIED RADII .025R BREAK CORNERS .010R	CIRCLE SIZE 3-4		
EST. AREA .681	EST. PERIMETER 24.080		
EST. WT. PER FT. .817	FACTOR 30		
STANDARD TOLERANCES FOR EXTRUDED PRODUCTS APPLY UNLESS SPECIFICALLY SHOWN OTHERWISE			

REVISIONS	DATE
REDRAWN W/ NO REVISIONS	9-27-99

SOLID ☒ HOLLOW ☐ SEMI HOLLOW ☐
TUBE ☐ BAR ☐ ROD ☐

SILVER CITY ALUMINUM CORPORATION
Custom Aluminum Extrusion
704 WEST WATER STREET TAUNTON, MA. 02780

CUSTOMER: UNIVERSAL ALUMINUM
CITY: MARLBORO STATE: MA
APPLICATION: JAMB

DIE DATA		BILLET DATA	
TYPE	SOLID	TYPE	
SIZE	9x2w3/4"POCKET	SIZE	
BACKER	1S-9A-4532		
BOLSTER	1B-1	RUNOUT	

SCALE 1 : 1	DRAWN JCH
DATE 9-12-94	TRACED EI
MAT'L 6063-T5	CK'D
CUST. NO. 3434	

Architectural Testing

Test sample complies with these details.
Deviations are noted.

Report# B8036.01 + B8036.02

Date 4/18/12 Tech BJ

Approved for Historic Preservation
Certificate of Appropriateness
Date: 03/03/16

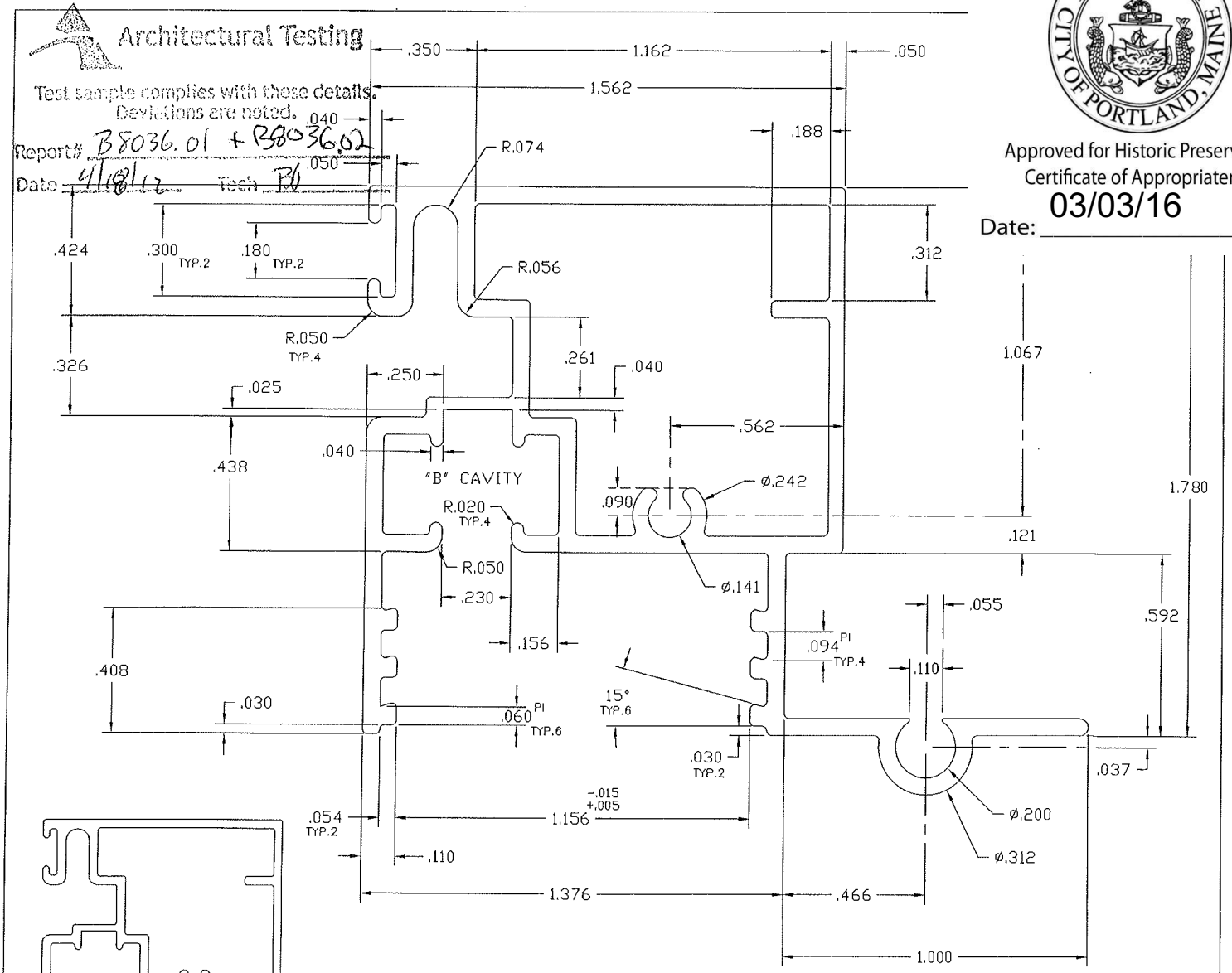

ACTUAL SIZE

400 DOUBLE HUNG TSTR FOR METAL TILT LATCHES

UNSPECIFIED WALLS .056 UNSPECIFIED RADII .020 BREAK CORNERS .015R		CIRCLE SIZE 2-3	
EST. AREA .568		EST. PERIMETER 14.631	
EST. WT. PER FT. .682		FACTOR 42	
STANDARD TOLERANCES FOR EXTRUDED PRODUCTS APPLY UNLESS SPECIFICALLY SHOWN OTHERWISE			
REVISIONS	DATE		
REDESIGN KEPT ORIG. NO.	9-9-02		

SOLID ☐ HOLLOW ■ SEMI HOLLOW ☐
TUBE ☐ BAR ☐ ROD ☐

SILVER CITY ALUMINUM CORPORATION
Custom Aluminum Extrusion
704 WEST WATER STREET TAUNTON, MA. 02780

CUSTOMER: UNIVERSAL ALUMINUM
CITY: MARLBORO STATE: MA

APPLICATION: THERMAL TILT DH - TOP RAIL

DIE DATA		BILLET DATA	
TYPE	HOLLOW	TYPE	
SIZE	9 X 4	SIZE	
BACKER		RUNOUT	
BOLSTER	1B-2194		

SCALE	DRAWN
2 : 1	LD
DATE	TRACED
7-16-02	
MAT'L	CK'D
6063-T5	
CUST. NO.	
8679	

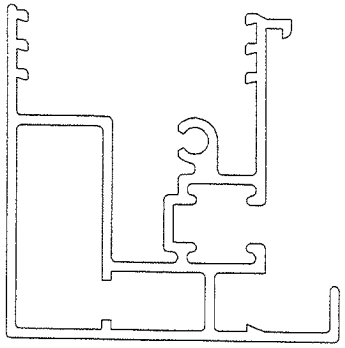

ACTUAL SIZE

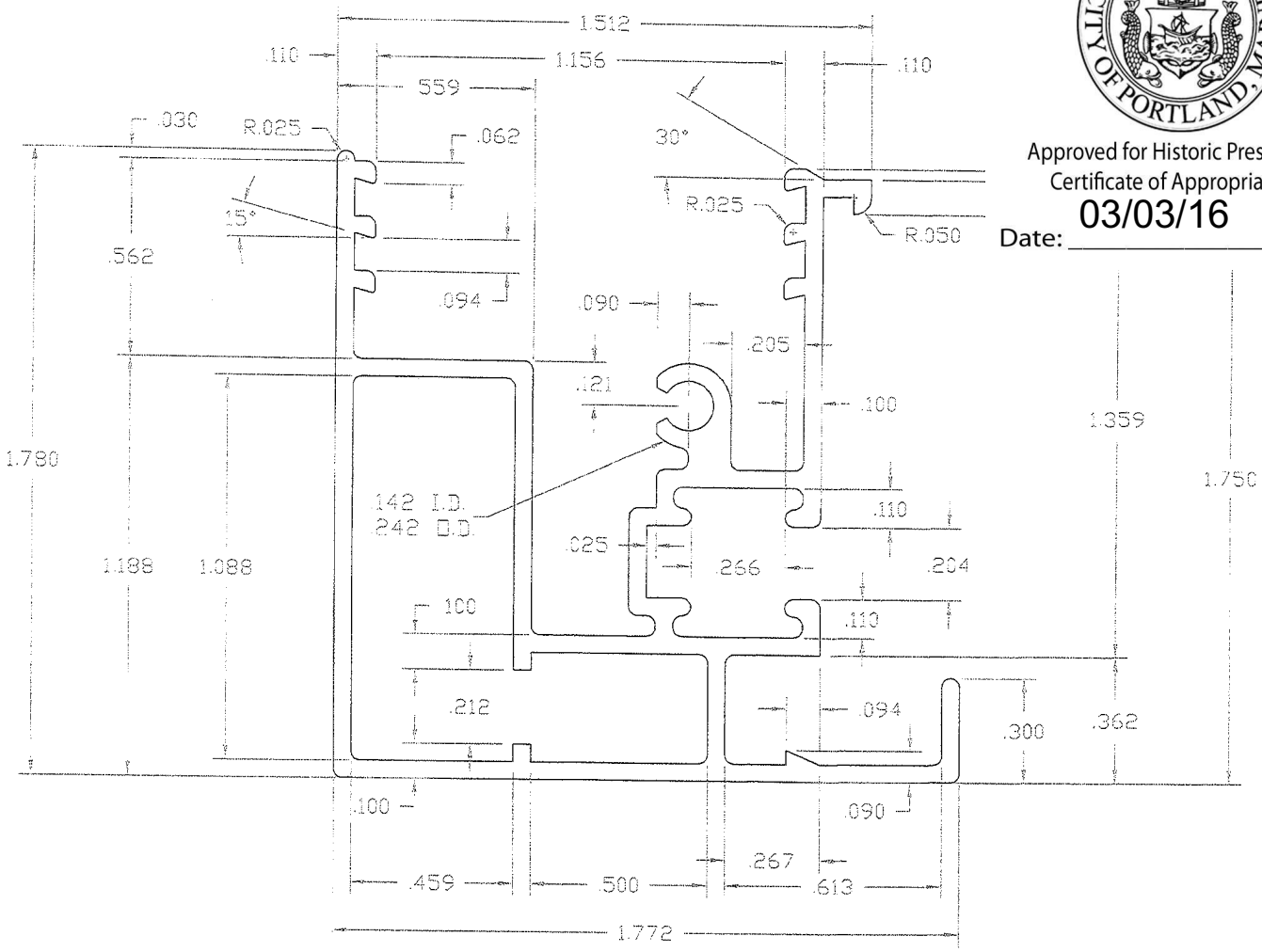

Approved for Historic Preservation
Certificate of Appropriateness
Date: 03/03/16

Architectural Testing
Test sample complies with these details.
Deviations are noted.
Report# B7036.01 + B6036.02
Date 4/18/12 Tech BJ

SILVER CITY ALUMINUM CORPORATION Custom Aluminum Extrusions 704 WEST WATER STREET TAUNTON, MA. 02780	EST. AREA .495		EST. PERIMETER 14.483	NOTES:
	EST. WT. PER FT. .594		FACTOR 36	REVISIONS / DATE
	APPLICATION: KEEPER RAIL 400 SERIES			
	SCALE 2 : 1	DRAWN JCH	CIRCLE SIZE 1-2	
CUSTOMER: UNIVERSAL ALUMINUM	DATE 12-2-02	TRACED	UNSPECIFIED WALL .05	DIE DATA / BILLET DATA
CITY: MARLBORO STATE: MA	MAT'L 6063-T5	CK'D	UNSPECIFIED RADII .025R	TYPE HOLLOW / TYPE
SOLID ☐ HOLLOW ■ SEMI HOLLOW ☐	CUST. NO. CUST #		BREAK CORNERS .015R	DIE SIZE 9 X 4 / SIZE
TUBE ☐ BAR ☐ ROD ☐				BACKER - - - - / RUNOUT
STANDARD TOLERANCES FOR EXTRUDED PRODUCTS APPLY UNLESS SPECIFICALLY SHOWN OTHERWISE				BOLSTER 1B-2194

400 DOUBLE HUNG LOCK RAIL FOR METAL TILT LATCHES

Approved for Historic Preservation Certificate of Appropriateness
Date: 03/03/16

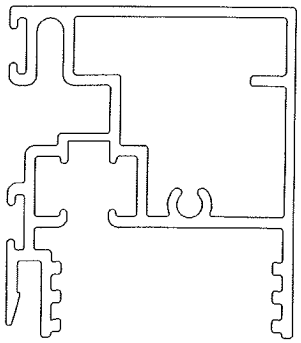

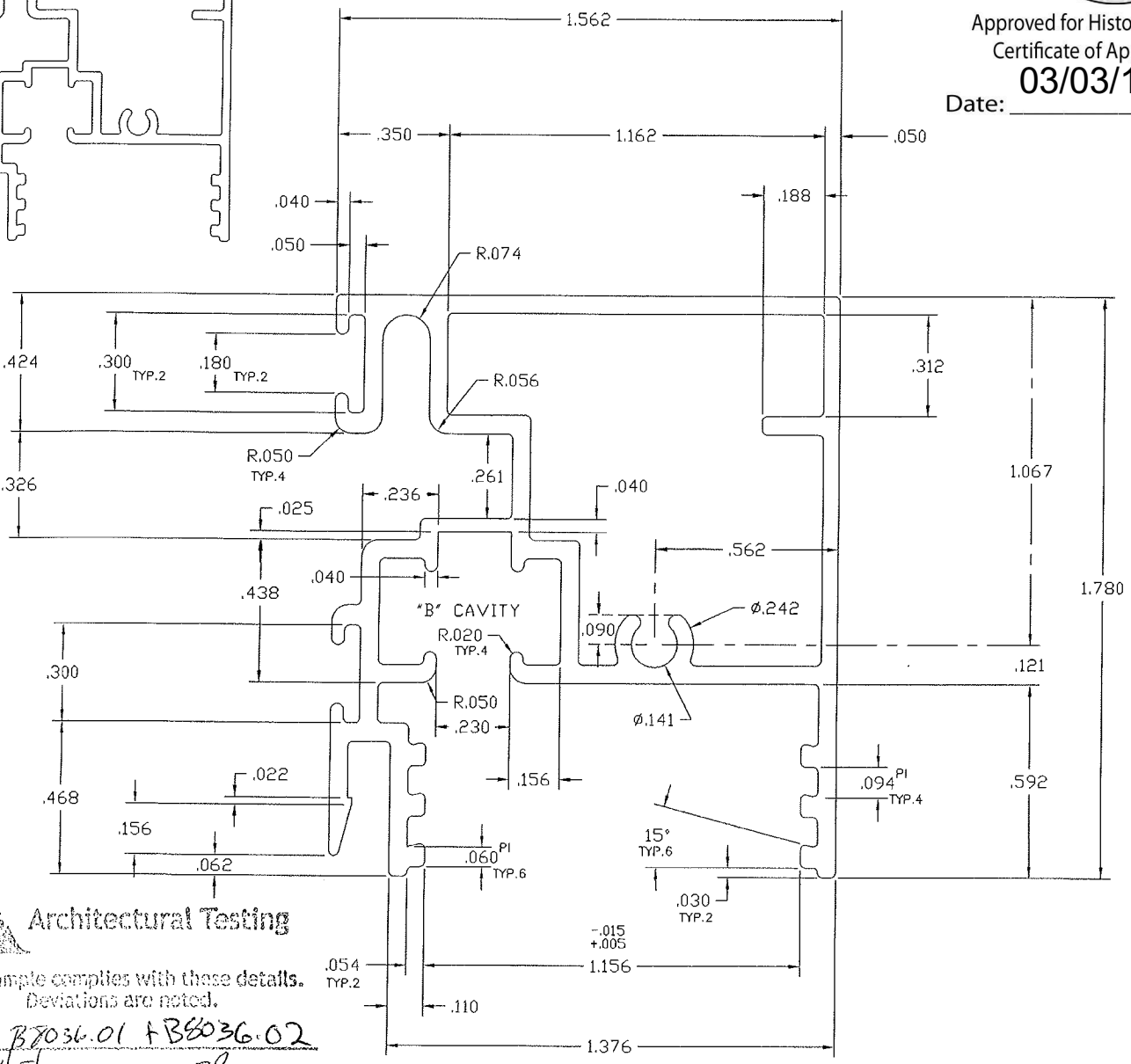

Architectural Testing

Test sample complies with these details. Deviations are noted.

Report# B8036.01 + B8036.02

Date 4/8/12 Tech BB

UNSPECIFIED WALLS .056 UNSPECIFIED RADII .020 BREAK CORNERS .015R		CIRCLE SIZE 2-3	
EST. AREA .530		EST. PERIMETER 13.308	
EST. WT. PER FT. .636		FACTOR 52	
STANDARD TOLERANCES FOR EXTRUDED PRODUCTS APPLY UNLESS SPECIFICALLY SHOWN OTHERWISE			
REVISIONS	DATE		
SOLID ☐ HOLLOW ■ SEMI HOLLOW ☐			
TUBE ☐ BAR ☐ ROD ☐			

SILVER CITY ALUMINUM CORPORATION
Custom Aluminum Extrusion
704 WEST WATER STREET TAUNTON, MA. 02780

CUSTOMER: UNIVERSAL ALUMINUM
CITY: MARLBORO STATE: MA

APPLICATION: THERMAL TILT OH - TOP RAIL

DIE DATA		BILLET DATA	
TYPE	HOLLOW	TYPE	
SIZE	9 X 4	SIZE	
BACKER		RUNOUT	
BOLSTER	1B-2194		

SCALE 2 : 1	DRAWN LD
DATE 7-15-02	TRACED
MAT'L 6063-T5	CK'D
CUST. NO. 8685	

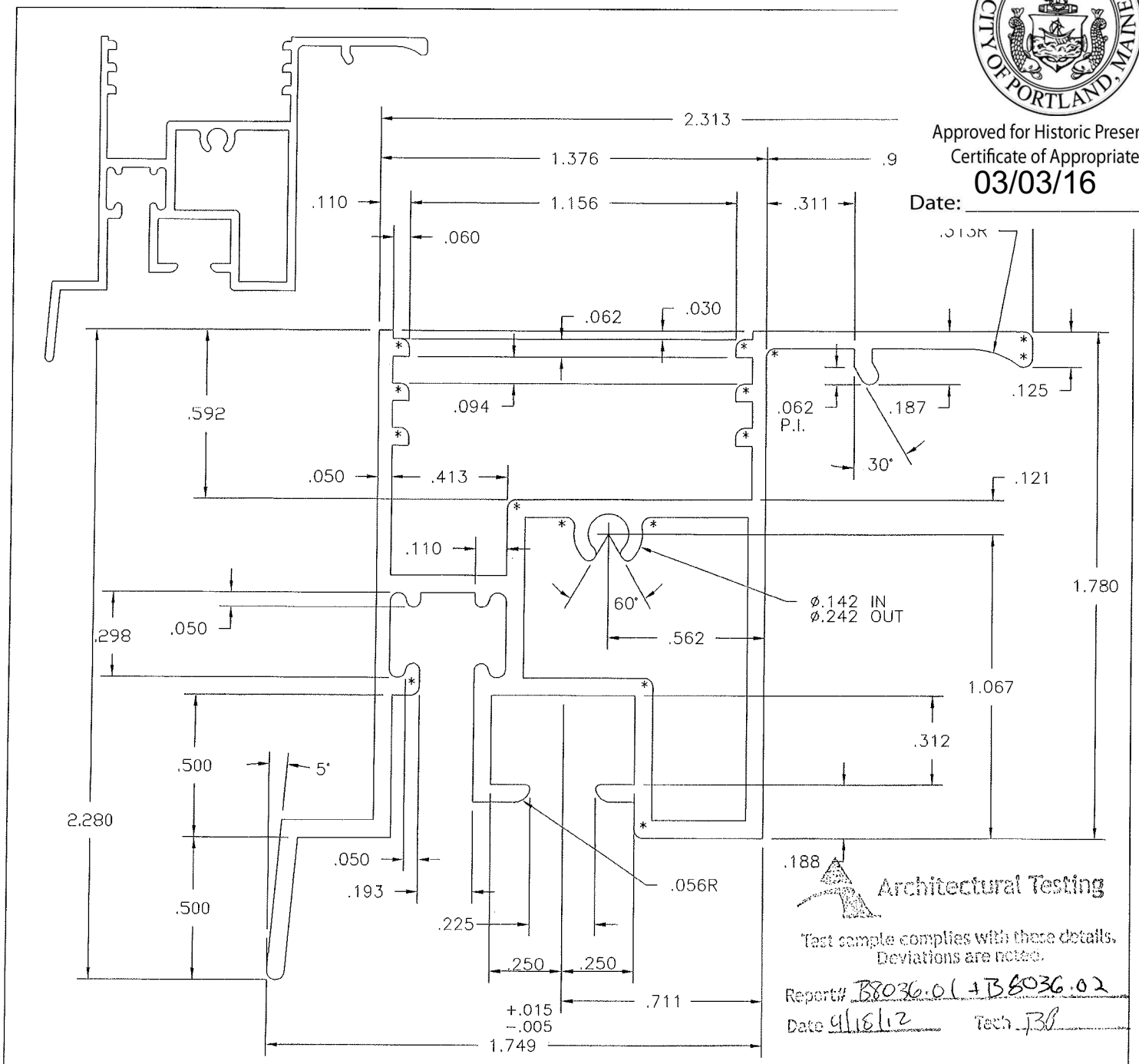

Approved for Historic Preservation
Certificate of Appropriateness
Date: 03/03/16

Architectural Testing

Test sample complies with these details. Deviations are noted.

Report# B8036.01 + B8036.02
Date 9/18/12 Tech JB

UNSPECIFIED WALLS	.062	CIRCLE SIZE	3-4
UNSPECIFIED RADII	.031R *		
BREAK CORNERS	.015R		
EST. AREA	.614	EST. PERIMETER	15.896
EST. WT. PER FT.	.737	FACTOR	54

STANDARD TOLERANCES FOR EXTRUDED PRODUCTS APPLY UNLESS SPECIFICALLY SHOWN OTHERWISE

REVISIONS	DATE
REDRAWN W/ NO REVISIONS	9-8-99

SOLID ☐ HOLLOW ■ SEMI HOLLOW ☐
TUBE ☐ BAR ☐ ROD ☐

SILVER CITY ALUMINUM CORPORATION

Custom Aluminum Extrusion

704 WEST WATER STREET TAUNTON, MA. 02780

CUSTOMER: UNIVERSAL ALUMINUM PRODUCTS

CITY: MARLBORO STATE: MA

APPLICATION: BOTTOM RAIL

DIE DATA		BILLET DATA	
TYPE	HOLLOW	TYPE	
SIZE	9 X 4	SIZE	
BACKER	~ ~		
BOLSTER	1B-2194	RUNOUT	

SCALE	DRAWN
2 : 1	JCH
DATE	TRACED
9-12-94	EI
MAT'L	CK'D
6063-T5	
CUST. NO.	
6052	

Approved for Historic Preservation
Certificate of Appropriateness
Date: 03/03/16

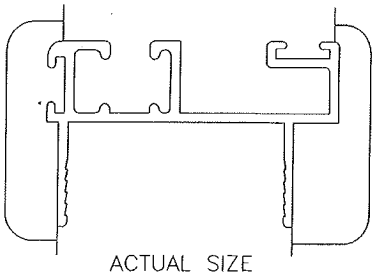

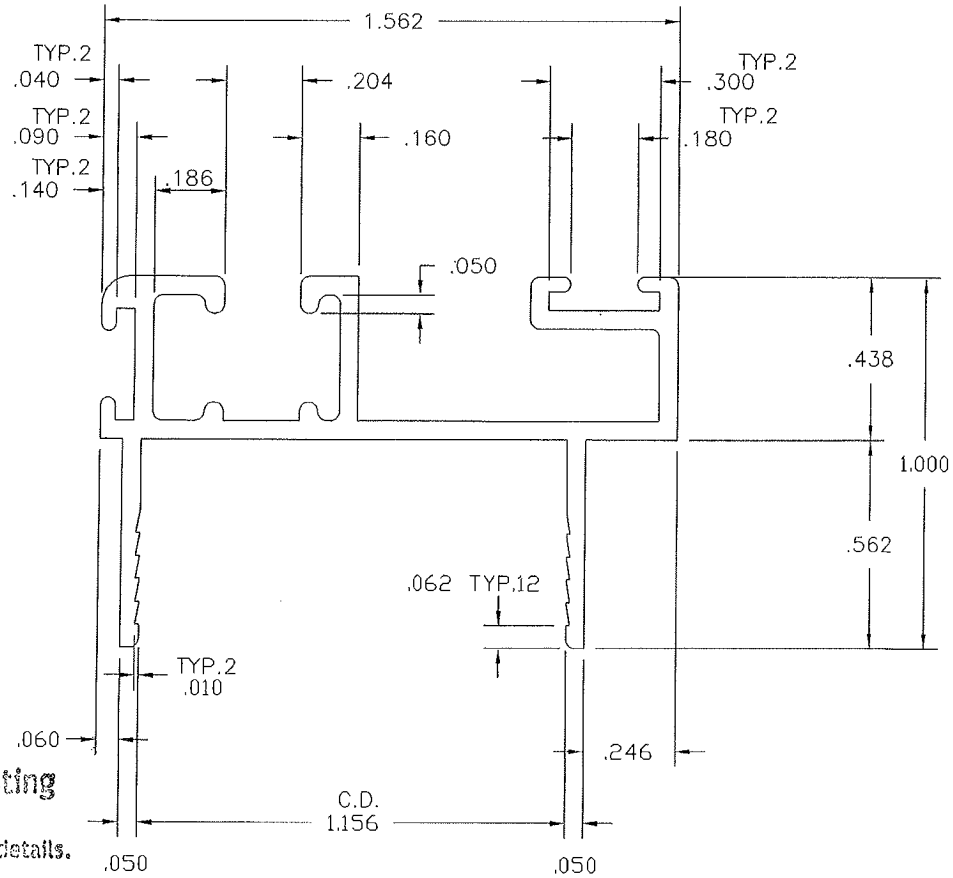

Architectural Testing

Test sample complies with these details.
Deviations are noted.

Report# B7036.01 + B7036.02
Date 4/18/12 Tech BJ

UNSPECIFIED WALLS .050 UNSPECIFIED RADII .025R BREAK CORNERS .010R		CIRCLE SIZE	1-2
EST. AREA	.251	EST. PERIMETER	10.081
EST. WT. PER FT.	.301	FACTOR	34

STANDARD TOLERANCES FOR EXTRUDED PRODUCTS APPLY UNLESS SPECIFICALLY SHOWN OTHERWISE

REVISIONS	DATE
REDRAWN W/ NO REVISIONS	11-13-02

SOLID ☒ HOLLOW ☐ SEMI HOLLOW ☐
TUBE ☐ BAR ☐ ROD ☐

SILVER CITY ALUMINUM CORPORATION
Custom Aluminum Extrusion
704 WEST WATER STREET TAUNTON, MA. 02780

CUSTOMER: UNIVERSAL ALUMINUM
CITY: MARLBORO STATE: MA
APPLICATION: TOP STILE

DIE DATA		BILLET DATA	
TYPE	SOLID	TYPE	
SIZE	9x2w3/4"POCKET	SIZE	
BACKER	2S-9A-4533		
BOLSTER	2B-2218	RUNOUT	

SCALE	DRAWN
2 : 1	
DATE	TRACED
9-12-94	AF
MAT'L	CK'D
6063-T5	
CUST. NO.	
3436	

Approved for Historic Preservation
Certificate of Appropriateness
Date: 03/03/16

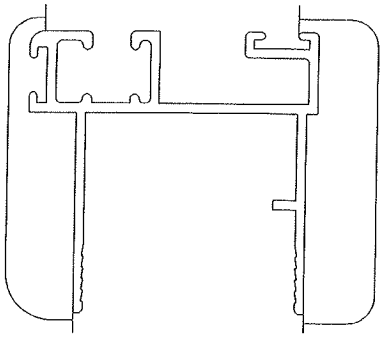

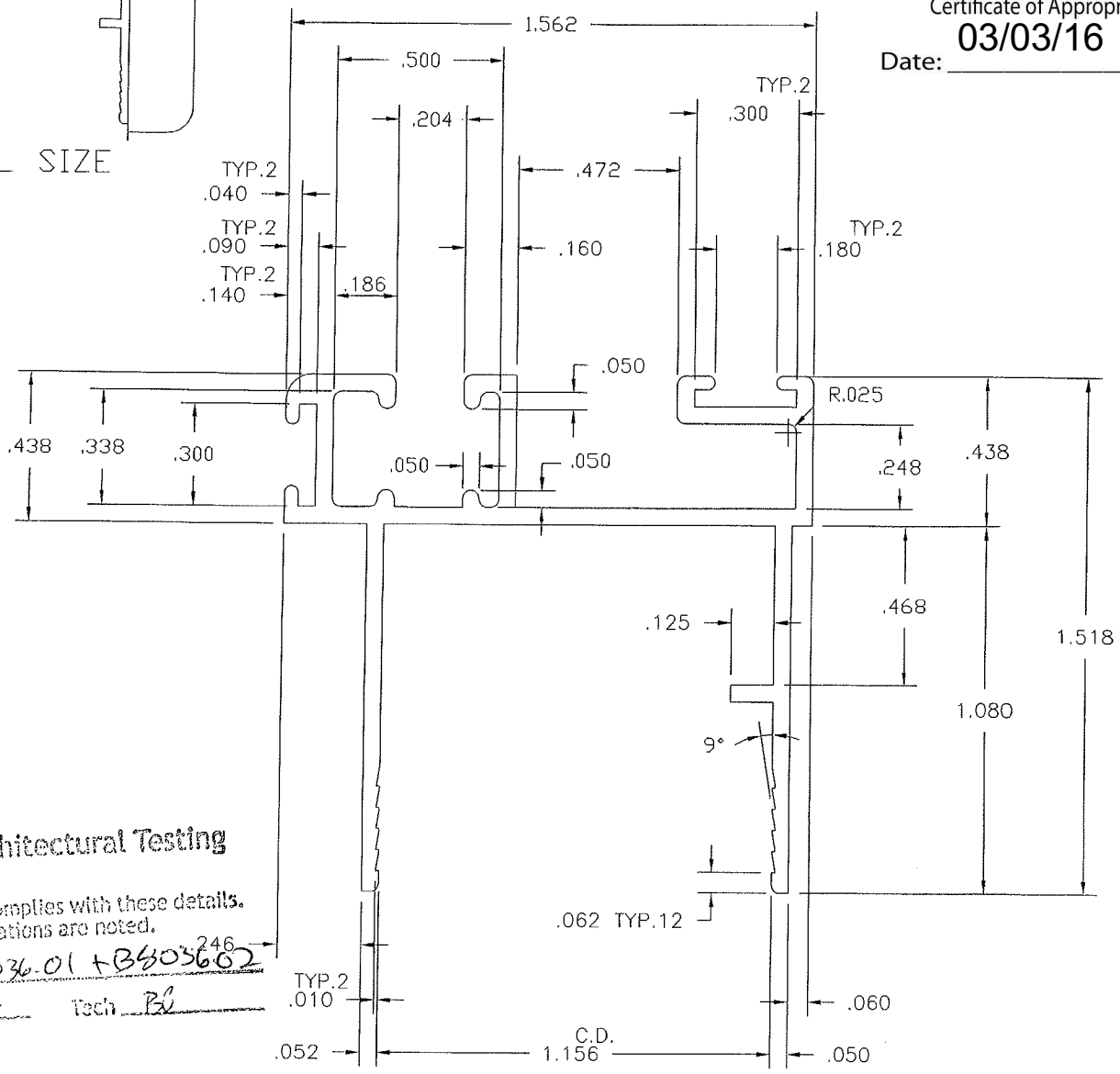

Architectural Testing

Test sample complies with these details.
Deviations are noted.

Report# B8036.01 + B8036.02
Date 9/18/12 Tech BL

UNSPECIFIED WALLS .050 UNSPECIFIED RADII .025R BREAK CORNERS .010R		CIRCLE SIZE	1-2
EST. AREA	.309	EST. PERIMETER	12.399
EST. WT. PER FT.	.371	FACTOR	33

STANDARD TOLERANCES FOR EXTRUDED PRODUCTS APPLY UNLESS SPECIFICALLY SHOWN OTHERWISE

REVISIONS	DATE
REDRAWN W/ NO REVISIONS	3-2-00

SOLID ■ HOLLOW ⧄ SEMI HOLLOW ⧄
TUBE ⧄ BAR ⧄ ROD ⧄

SILVER CITY ALUMINUM CORPORATION
Custom Aluminum Extrusion
704 WEST WATER STREET TAUNTON, MA. 02780

CUSTOMER: UNIVERSAL ALUMINUM
CITY: MARLBORO STATE: MA
APPLICATION: BOTTOM STILE

DIE DATA		BILLET DATA	
TYPE	SOLID	TYPE	
SIZE	9x2w3/4"POCKET	SIZE	
BACKER	2S-9A-4533		
BOLSTER	2B-2218	RUNOUT	

SCALE 2 : 1	DRAWN
DATE 9-12-94	TRACED
MAT'L 6063-T5	CK'D
CUST. NO. 3435	

Architectural Testing

Test sample complies with these details.
Deviations are noted.

Report# B8036.01 + B603602
Date 4/18/12 Tech. BP

Approved for Historic Preservation
Certificate of Appropriateness
Date: 03/03/16

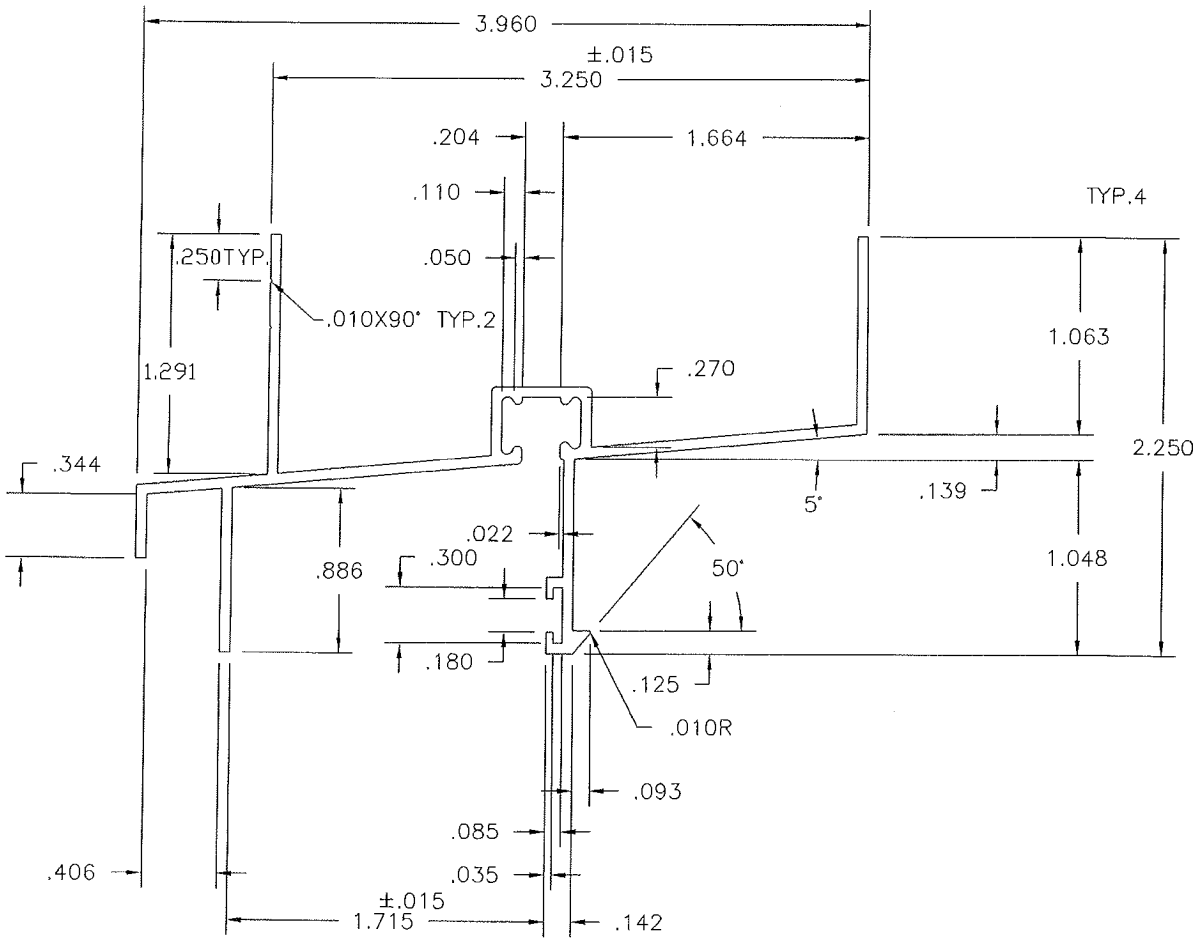

UNSPECIFIED WALLS .056 UNSPECIFIED RADII FULL BREAK CORNERS .025R		CIRCLE SIZE	4-5
EST. AREA	.558	EST. PERIMETER	19.863
EST. WT. PER FT.	.670	FACTOR	30

STANDARD TOLERANCES FOR EXTRUDED PRODUCTS APPLY UNLESS SPECIFICALLY SHOWN OTHERWISE

REVISIONS	DATE
REDRAWN W/ NO REVISIONS	5-3-00

SOLID ☒ HOLLOW ☐ SEMI HOLLOW ☐
TUBE ☐ BAR ☐ ROD ☐

SILVER CITY ALUMINUM CORPORATION
Custom Aluminum Extrusion
704 WEST WATER STREET TAUNTON, MA. 02780

CUSTOMER: UNIVERSAL ALUMINUM PRODUCTS
CITY: MARLBORO STATE: MA
APPLICATION: HEAD (THERMAL TILT DH)

DIE DATA		BILLET DATA	
TYPE	SOLID	TYPE	
SIZE	9x2w3/4"POCKET	SIZE	
BACKER	1S-9A-4534		
BOLSTER	1B-1	RUNOUT	

SCALE 1 : 1	DRAWN JCH
DATE 9-12-94	TRACED EI
MAT'L 6063-T5	CK'D
CUST. NO. 4139	

BILL OF MATERIAL

NO	DESCRIPTION	QTY/WIN
1	HEAD UNIT [illegible]	1/ WDTH
2	TOP HANDLE UNIT [illegible]	1/ WDTH
3	[illegible]	1/ WDTH
4	LOCK RAIL [illegible]	1/ WDTH
5	[illegible]	4
6	[illegible]	1/ WDTH
7	[illegible]	2/ HT
8	[illegible]	2/ 5 HT
9	[illegible]	2/ 5 HT

NO	DESCRIPTION	QTY/WIN
10	AUTO LOCK UNIT [illegible]	2 / WDTH
11	[illegible]	
12	[illegible]	
13	SCREW HANDLE [illegible]	
14	TRACK SCREW [illegible]	8
15	ASH SCREWS [illegible]	8
16	[illegible]	4
17	[illegible]	1 or 2
18	[illegible]	1 or 2

NO	DESCRIPTION	QTY/WIN
19	PIVOT BAR [illegible]	4
20	[illegible]	perm of glc
21	[illegible]	2/ @ 5 HT
22	SCREEN SPRING [illegible]	2
23	[illegible]	4
24	[illegible]	perm of scr
25	INSULATED GLASS [illegible]	2
26	SCREEN MESH [illegible]	1
27	POCKET CAP [illegible]	4

NO	DESCRIPTION	QTY/WIN
28	[illegible]	2
29	[illegible]	2 or 4
30	[illegible]	2 or 4
31	[illegible]	
32	[illegible]	
33	[illegible]	
34	[illegible]	2
35	[illegible]	4
36	BALANCE (VARY BY TYPE)	4

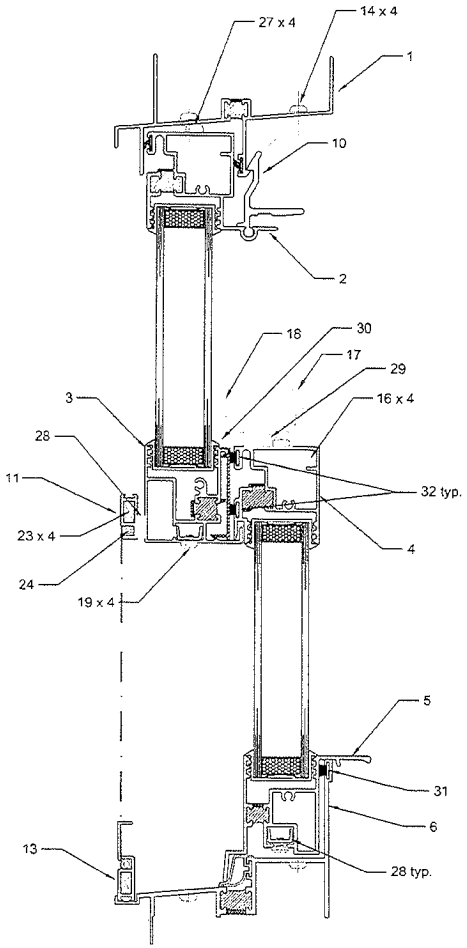

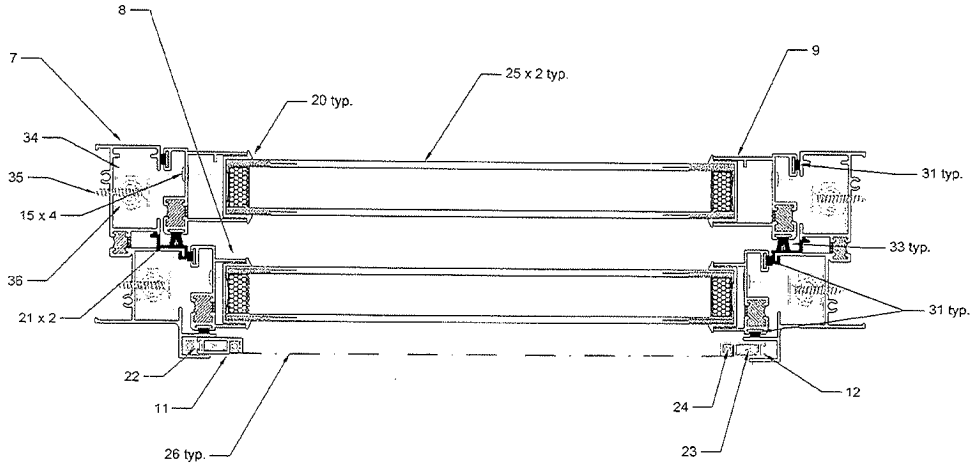

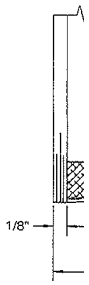

STANDARD INSULATED
GLASS UNIT
THIS WILL VARY BY PROJECT AND
CONDITIONS

RESURGAM. CITY OF PORTLAND, MAINE

Approved for Historic Preservation
Certificate of Appropriateness
Date: 03/03/16

Architectural Testing

Test [illegible] details.
[illegible]
Report: B8036.01 + B8036.02
Date: 4/18/12 [illegible]

SHIPPING ADDRESS
XXXXXXX

REVISIONS

1	2	3	4	5	6

PROJECT NAME
XXXXXX
XXXXXX
XXXXXX
XXXXXX
XXXXXX
FLM

DWG #
D-1