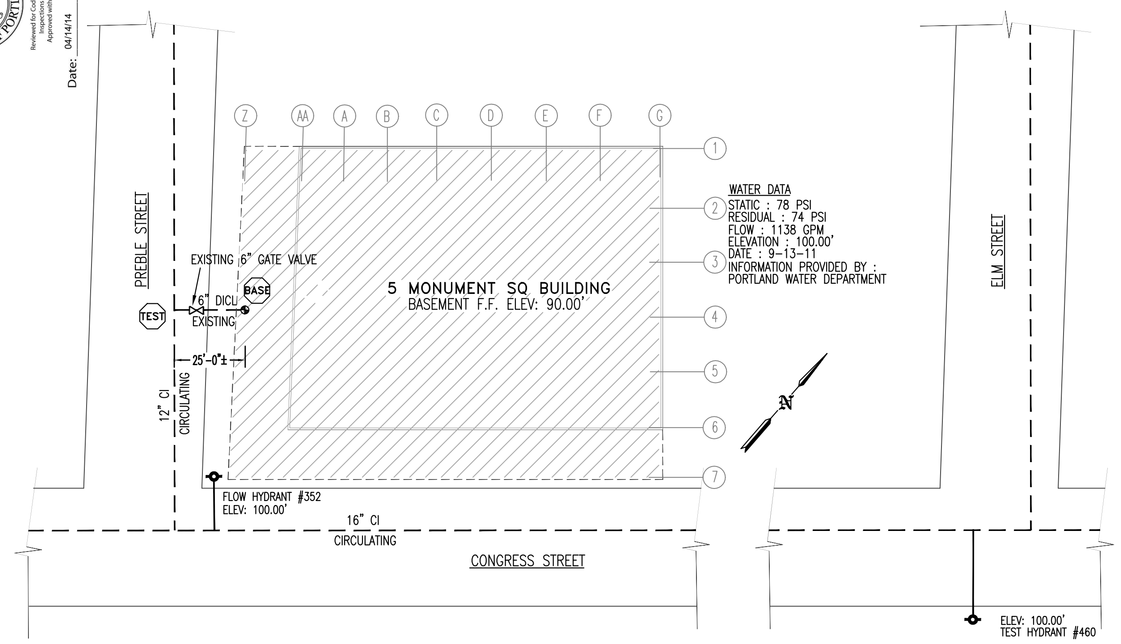

PLOT PLAN
NOT TO SCALE

NOTE: THE UNDERGROUND PIPING IS EXISTING PREVIOSLY INSTALLED BY OTHERS. EASTERN FIRE PROTECTION INC. TO START AT THE UNDERGROUND ENTRANCE FLANGE PROVIDED BY OTHERS.

LEGEND

1. 6" O.S.&Y GATE VALVE W/ TAMPER SWITCH (N.O.)
2. SUCTION GAUGE (0-300 PSI)
3. PATTERSON FIRE PUMP MODEL 6x6 VIP INLINE 50HP 460/3/60 RATED FOR 750 GPM @ 80 PSI
4. DISCHARGE GAUGE (0-300 PSI)
5. CASING RELIEF VALVE LOCATED ON THE DISCHARGE SIDE OF THE PUMP.
6. 6" WAFER CHECK VALVE
7. 6" GROOVED BUTTERFLY VALVE W/ TAMPER SWITCH (N.O.)
8. 6" GROOVED CHECK VALVE
9. 6" GROOVED BUTTERFLY VALVE W/ TAMPER SWITCH (N.C.)
10. 3" GROOVED BUTTERFLY VALVE W/ TAMPER SWITCH (N.O.)
11. 3" GROOVED CHECK VALVE
12. 3" POTTER VSR-4 FLOW SWITCH
13. 1¼" TEST AND DRAIN VALVE W/ ½" RELIEF VALVE
14. WATER PRESSURE GAUGE (0-300 PSI)
15. 1/4" 3-WAY VALVE
16. 2" TEST AND DRAIN VALVE W/ ½" RELIEF VALVE
17. 6" GROOVED BUTTERFLY VALVE W/ TAMPER SWITCH (N.O.)
18. 6" POTTER VSR-6 FLOW SWITCH
19. 6" AMES M200 BACKFLOW PREVENTER W/BUTTERFLY VALVE TAMPER SWITCH (N.O.) (SEE BASEMENT PLAN DWG 2 OF 3)
20. MTH MODEL T41E 1 HP 460/3/60 JOCKEY PUMP 1" SUCTION 1" DISCHARGE.
21. CUTLER HAMMER MODEL XTJP JOCKEY PUMP CONTROLLER 460/3/60.
22. CUTLER HAMMER MODEL FD70 FIRE PUMP CONTROLLER 460/3/60.
23. JOCKEY PUMP RELIEF VALVE
24. 1" CHECK VALVE
25. 1" GATE VALVE W/ TAMPER SWITCH (N.O.)
26. 1/2" GLOBE VALVE
27. 1/4" PLUG
28. 1/2" CHECK VALVE W/ 3/32" HOLE IN CLAPPER.
29. 1" AUXILIARY DRAIN VALVE.
30. PIPE STAND
31. HEAD BOX 12 SPARE HEADS AND HEAD WRENCH.
32. NOT USED
33. EXISTING 2" MAIN DRAIN DISCHARGE (SEE BASEMENT PLAN DWG 2 OF 3).
34. FIRE PUMP TEST HEADER (3) 2½" HOSE GATE VALVES (SEE BASEMENT PLAN DWG 2 OF 3).
35. EXISTING 4x2½x2½ FIRE DEPT CONNECTION (SEE BASEMENT PLAN DWG 2 OF 3).
36. 4" GROOVED CHECK VALVE (SEE BASEMENT PLAN DWG 2 OF 3)..
37. 1/2" BALL DRIP VALVE (SEE BASEMENT PLAN DWG 2 OF 3)..

N.O. = NORMALLY OPEN
N.C. = NORMALLY CLOSED

NOTE: WHERE THE PUMP ROOM IS NOT CONSTANTLY ATTENDED, AUDIBLE OR VISIBLE SIGNAL POWERED BY A SOURCE NOT EXCEEDING 125V SHALL BE PROVIDED AT A POINT OF CONSTANT ATTENDANCE.

THE FIRE PUMP SHALL BE MONITORED FOR THE FOLLOWING FUNCTIONS:
1) MOTOR RUNNING.
2) LOSS OF PHASE.
3) PHASE REVERSAL.
~~4) CONTROLLER CONNECTED TO ALTERNATE POWER~~

SEQUENCE OF PUMP OPERATION

FIRE PUMP CHURN PRESSURE = 88 + 82 = 170 PSI
JOCKEY PUMP STOP = 170 PSI + 5 PSI = 175 PSI
JOCKEY PUMP START = 170 PSI – 10 PSI = 160 PSI
FIRE PUMP START = 160 PSI – 5 PSI = 155 PSI

THE ABOVE SETTINGS ARE APPROXIMATE AND MAY VARY SLIGHTLY TO SUIT ACTUAL FIELD TEST CONDITIONS.
ALL ELECTRICAL WIRING BY OTHERS IN COMPLIANCE WITH ART. 695 OF THE NATIONAL ELECTRIC CODE (NFPA 70).

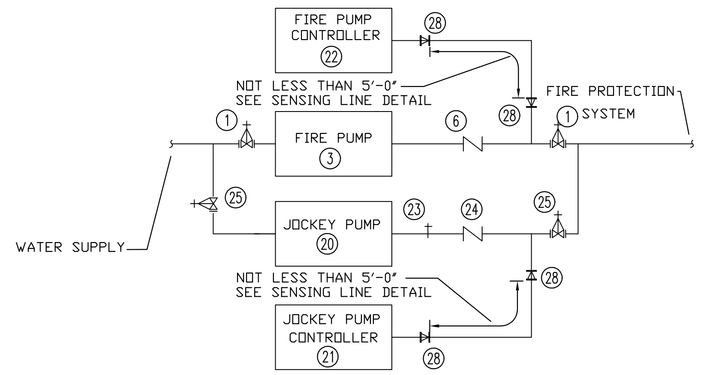

PIPING CONNECTION FOR PRESSURE SENSING LINE.
(AS PER FIGURE A.4.30(b) NFPA 20, 2010 EDITION)

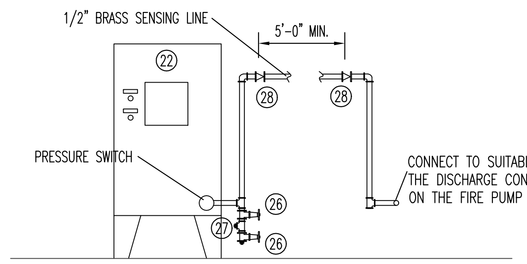

FIRE PUMP SENSING LINE DETAIL
NOT TO SCALE

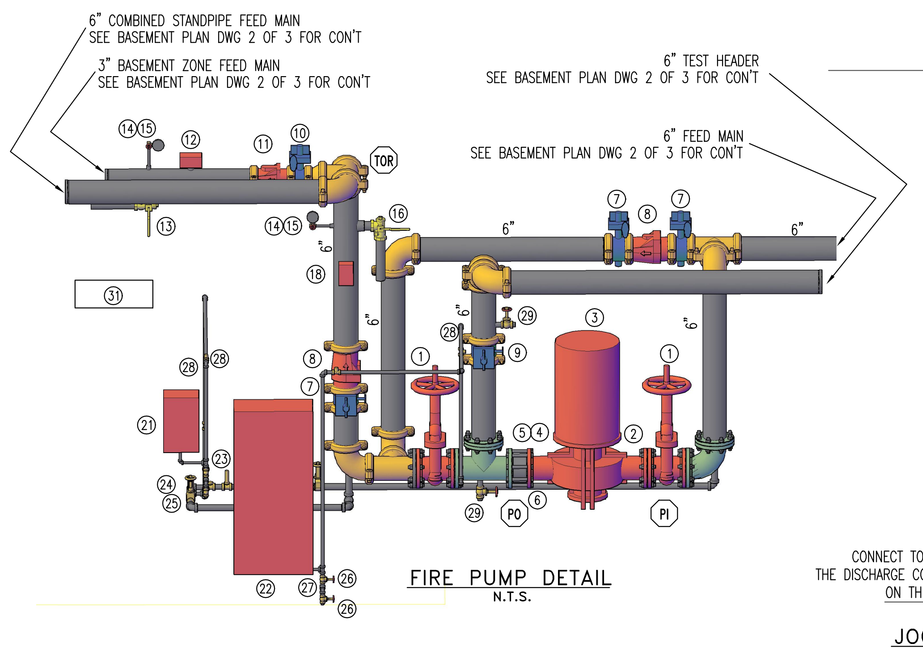

FIRE PUMP DETAIL
N.T.S.

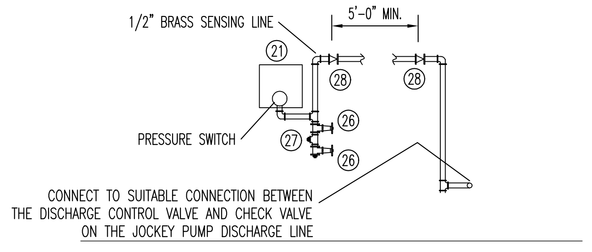

JOCKEY PUMP SENSING LINE DETAIL
NOT TO SCALE

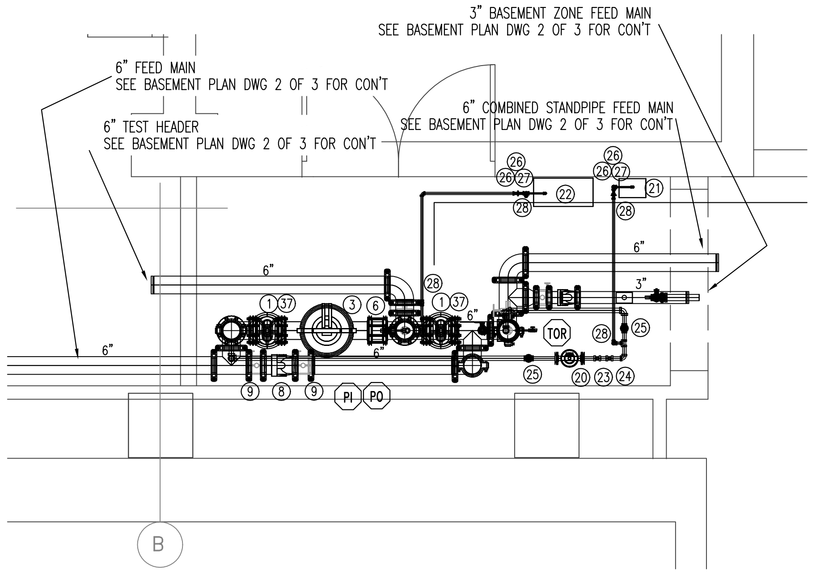

BASEMENT FIRE PUMP ROOM PARTIAL PLAN
SCALE: N.T.S
FF ELEV = 90.00'

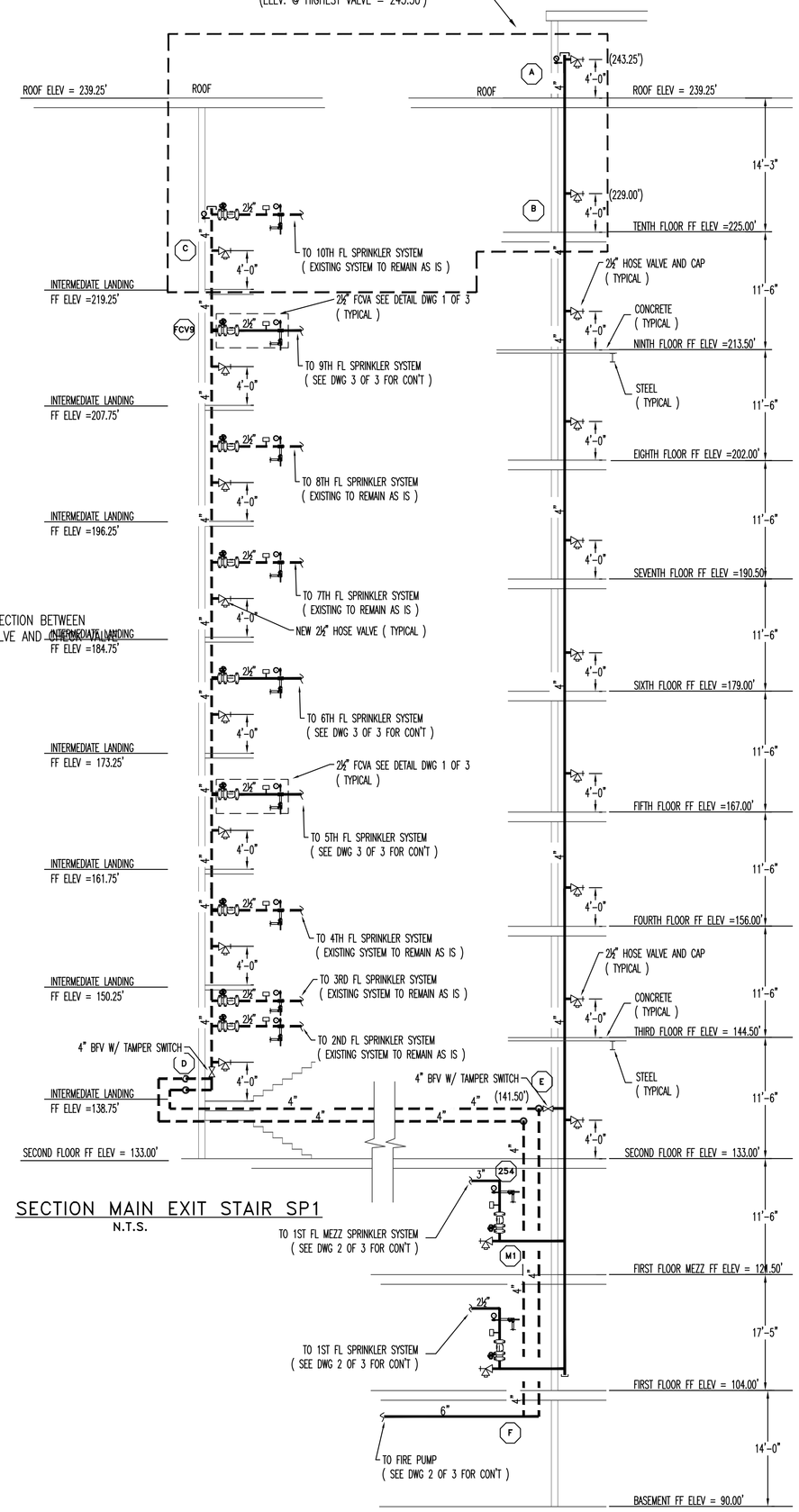

SECTION MAIN EXIT STAIR SP1
N.T.S.

SECTION SECONDARY EXIT STAIR SP2
N.T.S.

GENERAL NOTES

SPRINKLER SYSTEM INSTALLATION TO COMPLY WITH NFPA 13, (2013).

SEE EXISTING EASTERN FIRE PROTECTION DRAWING. MAINE BANK & TRUST SECOND FLOOR & BASEMENT #E-2156-95 SHEET 1 OF 1 FOR RISER, SITE PLAN & WATER DATA.

SCOPE OF WORK:
UPGRADE THE EXISTING FIRE PROTECTION THROUGHOUT THE ENTIRE BUILDING IN COMPLIANCE WITH DEFICIENCIES & PLAN OF CORRECTION REPORT BY MARC L. TARDIF, PE AS NOTED BELOW:

1. INSTALL 750 GPM @80 PSI FIRE PUMP TO SUPPLY THE CLASS I WET AUTOMATIC STANDPIPES, AND SPRINKLER SYSTEMS LOCATED BASEMENT TO NINTH FLOOR.

2. INSTALL CLASS I WET AUTOMATIC STANDPIPE IN THE SECONDARY EXIT STAIR WITH 2½" HOSE VALVES LOCATED ON THE SECOND FLOOR TO THE ROOF ACCESS LANDING.

3. CONVERT EXISTING 4" SPRINKLER RISER LOCATED IN THE MAIN STAIR TO A COMBINED STANDPIPE RISER WITH 2 1/2" HOSE VALVES LOCATED FROM THE SECOND TO THE TENTH FLOORS.

4. INSTALL SPRINKLER PROTECTION ON THE BASEMENT, FIRST, FIRST FLOOR MEZZANINE, FIFTH, SIXTH, AND NINTH FLOORS ONLY. ALL OTHER FLOORS OF THE BUILDING HAVE SPRINKLER PROTECTION PREVIOUSLY INSTALLED.

OCCUPANCY HAZARD AND CLASSIFICATION:
LIGHT HAZARD = ELEV LOBBY, OFFICES, BATH RMS, CORRIDORS, AND CONFERENCE ROOMS.

ORDINARY GROUP I = MECH/ ELEC ROOM, STORAGE ROOM, FILE STORAGE.

MAXIMUM HEIGHT OF STORAGE 8'-0" A.F.F.

ALL DIMENSIONS ARE SHOWN FOR GENERAL LOCATION OF SPRINKLER HEADS ; PIPING MAY VARY TO SUIT ACTUAL FIELD CONDITIONS.

ALTHOUGH NOT SPECIFIED, SOME SPRINKLER HEADS HAVE BEEN SHOWN @ CENTERLINE OF TILE. ACTUAL ORIENTATION OF HEADS WITH RESPECT TO CEILING COMPONENTS WILL VARY ACCORDING TO FIELD CONDITIONS.

ACOUSTICAL CEILING TILE (ACT) TO BE LISTED NON-COMBUSTIBLE WITH UL FLAME SPREAD OF LESS THAN 25.

ALL WIRING TO BE DONE BY OTHERS.

CONSTRUCTION OF 2 HOUR RATED FIRE PUMP ROOM TO BE DONE BY OTHERS.

⬡ = INDICATES HYDRAULIC REFERENCE POINTS.
(X-X) = FINISH FLOOR UP TO CENTERLINE OF PIPE.
(XX BPL) = BOTTOM OF PURLIN DOWN TO CENTERLINE OF PIPE.

NEW STEEL SPRINKLER PIPE
NEW CPVC SPRINKLER PIPE
EXISTING STEEL SPRINKLER PIPE

HYDRAULIC-SYSTEM

THIS BUILDING IS PROTECTED BY A HYDRAULICALLY DESIGNED CLASS I WET STANDPIPE SYSTEM AS PER NFPA14 (2010)

LOCATION: ROOF (A)

BASIS OF DESIGN:

1. NUMBER OF SP RISERS CALCULATED	2
2. GPM AT FIRST RISER	500 GPM
3. GPM EACH ADDITINAL RISER	250 GPM

SYSTEM DEMAND:

1. WATER FLOW RATE	750 GPM
2. REQUIRED PRESSURE AT FIRE DEPT CONNECTION	113 PSI

HYDRAULIC DATA NAMEPLATE
TO BE MOUNTED AT SYSTEM RISER

SEE DWG 1 OF 3 STANDPIPE SCHEMATIC

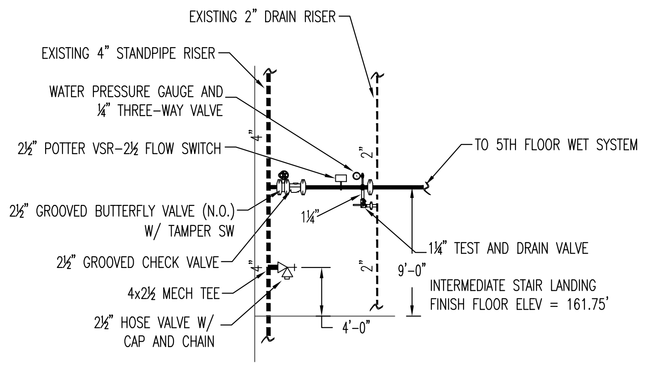

N.O. = NORMALLY OPEN

"FCVA" DETAIL (TYPICAL 5TH, 6TH, AND 9TH FLOOR)
N.T.S.
(MAIN EXIT STAIR)

GENERAL NOTES	DATE	REVISIONS
SPRINKLER SYSTEM INSTALLATION TO COMPLY WITH NFPA PAMPHLETS #13, 14, AND 20 (2010).		
EXPOSED BRANCH LINE PIPING 1"-2" TO BE BLACK STEEL SCH'D 40 JOINED BY THREADED DUCTILE IRON FITTINGS.		
CONCEALED BRANCH LINE PIPING 1"-2" TO BE CPVC PLASTIC PIPE C=150 JOINED WITH GLUED CPVC FITTINGS.		
MAIN PIPING 2½" AND LARGER TO BE BLACK STEEL SCH'D 10 W/ GROOVED ENDS & WELDED OUTLETS JOINED BY MECHANICAL COUPLINGS.		
OWNER TO PROVIDE SUFFICIENT HEAT THROUGHOUT BUILDING TO PREVENT FREEZING OF WATER FILLED SPRINKLER PIPING AND EQUIPMENT. (40°F)		

REQUIRED APPROVALS	
OWNER / ARCHITECT	
STATE FIRE MARSHAL	
PORTLAND FIRE DEPARTMENT	
DRAWN BY	GRD
NICET LEVEL III	CERT.# 090388
CHECKED BY	WAF
NICET LEVEL III	CERT.# 095574
CONTRACTOR LICENSE #	101
CONTRACTOR RMS #	368

5 MONUMENT SQUARE
2014 FIRE PROTECTION UPGRADE
465 CONGRESS ST., PORTLAND, ME

CONTRACT WITH: OWNER

EASTERN FIRE PROTECTION
AUBURN/LEWISTON INDUSTRIAL AIRPARK, AUBURN, MAINE 04210

FIRE SPRINKLER PLANS AND DETAILS	
DWG. NO.	1 OF 3
JOB NUMBER	AU-5126-14
SCALE	AS NOTED
DATE	4-7-14