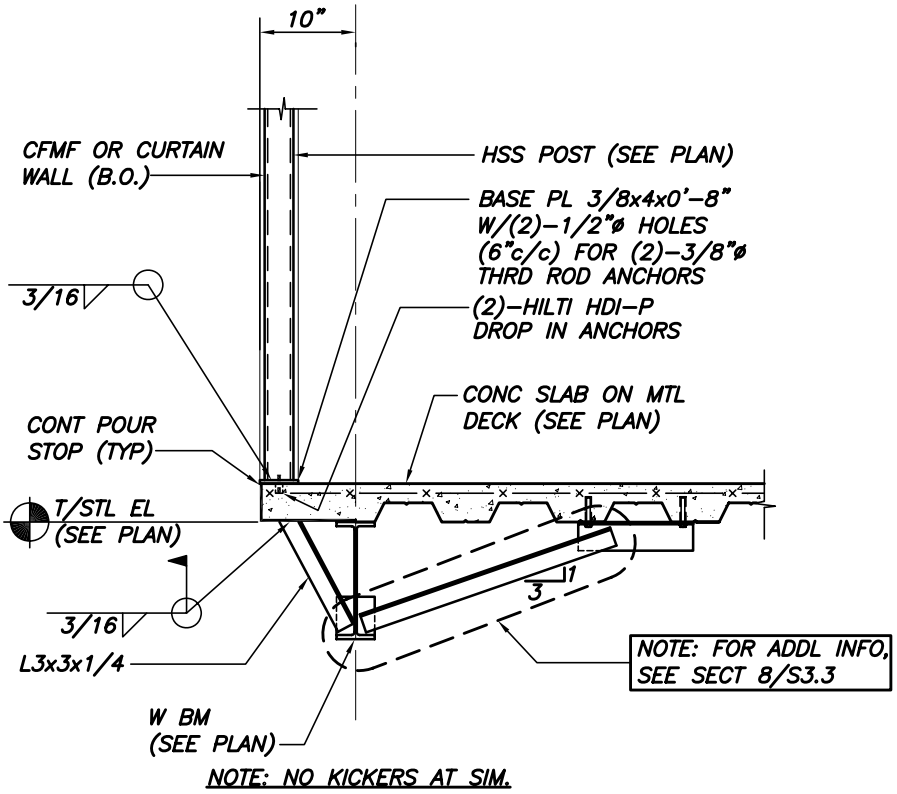

SECTION 1
3/4"=1'-0" SKS-33,34

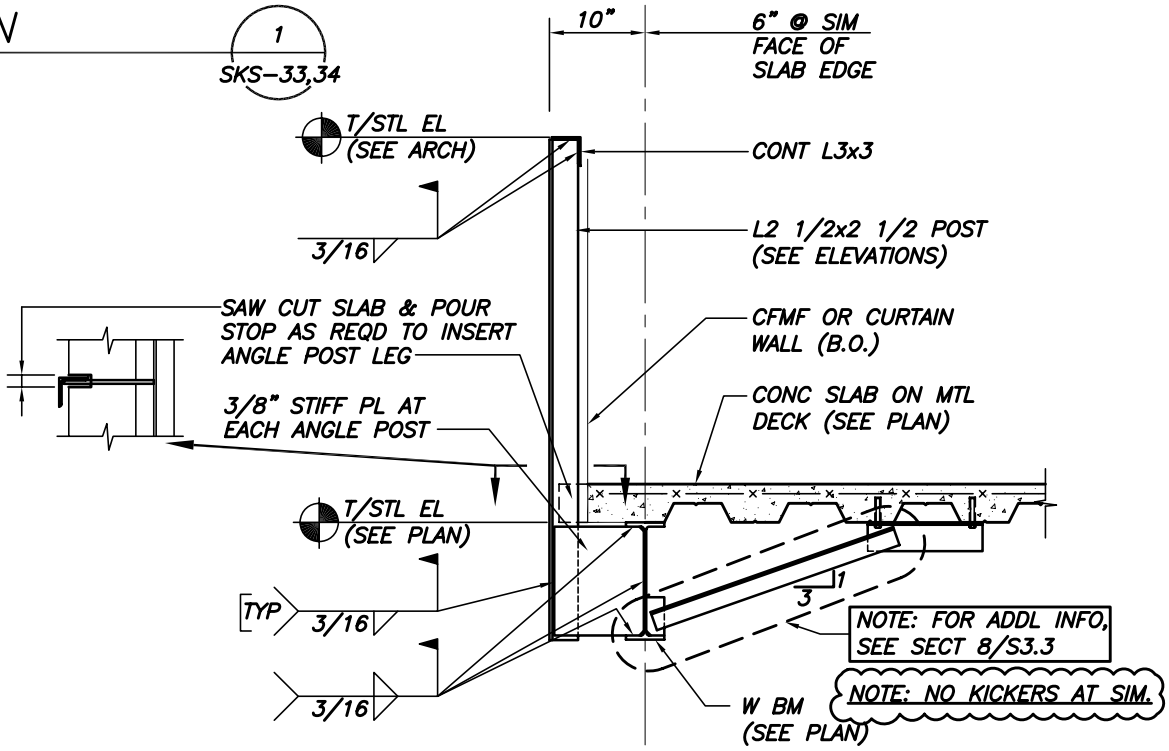

SECTION 2
3/4"=1'-0" SKS-34

REF DWG S3.2

BECKER
structural engineers, inc.
75 York Street
Portland, ME 04101-4701
Tel 207-879-1838
Fax 207-879-1822
info@beckerstructural.com
www.beckerstructural.com

Designed	NRM
Drawn	APP
Checked	PBB
Scale	AS NOTED
Date	11/20/09

POWERPAY OFFICE
PORTLAND, ME

Becker Job Number
2036

SKS-35
REV1