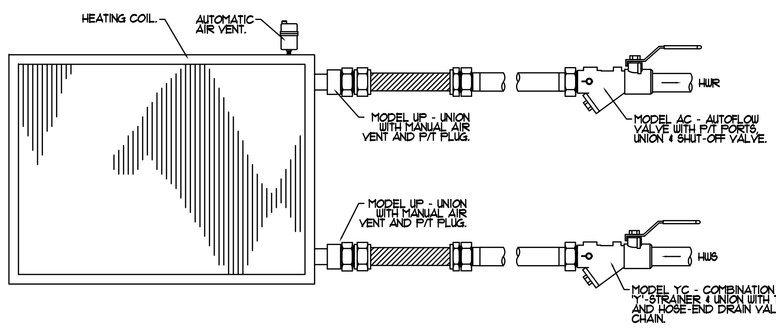

AUTOFLOW VALVE PIPING SCHEMATIC w/ NO VALVE CONTROL

NTS

NOTE - MODEL NUMBERS BASED ON FLOW DESIGN INC. FOR PIPE SIZES 2" AND SMALLER.
NOTE - DETAIL APPLIES TO UNIT HEATERS AND CABINET UNIT HEATERS.
NOTE - UNLESS OTHERWISE NOTED, UNIT HEATER PIPE SIZES SHALL BE 1¼".
NOTE - UNLESS OTHERWISE NOTED, CABINET UNIT HEATER PIPE SIZES SHALL BE ¾".

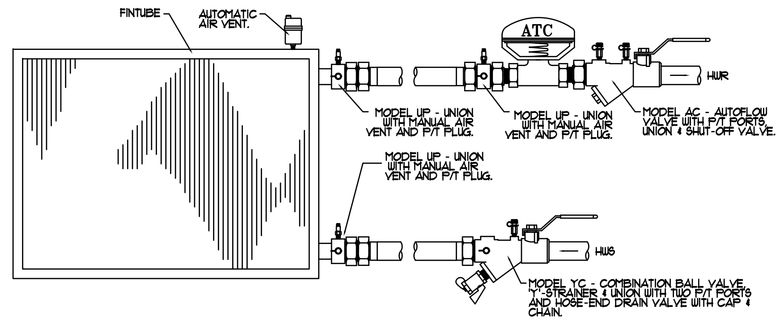

AUTOFLOW VALVE PIPING SCHEMATIC w/ 2-WAY VALVE

NTS

NOTE - MODEL NUMBERS BASED ON FLOW DESIGN INC. FOR PIPE SIZES 2" AND SMALLER.
NOTE - DETAIL APPLIES TO ERV's, FINTUBE AND WHERE INDICATED.
NOTE - UNLESS OTHERWISE INDICATED, PIPE SIZES SHALL BE AS FOLLOWS -
WALL HEATERS (WH 1 & 2), ½", FINTUBE RADIATION (FTR1, 2, 3) (¾").

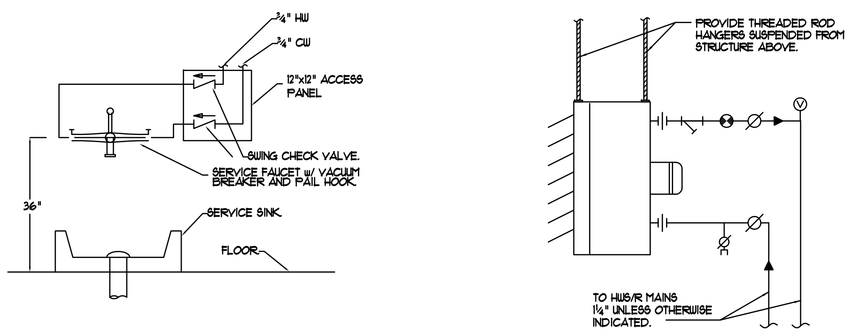

MOP BASIN INSTALLATION DETAIL

NTS

HORIZONTAL UNIT HEATER PIPING DETAIL

NTS

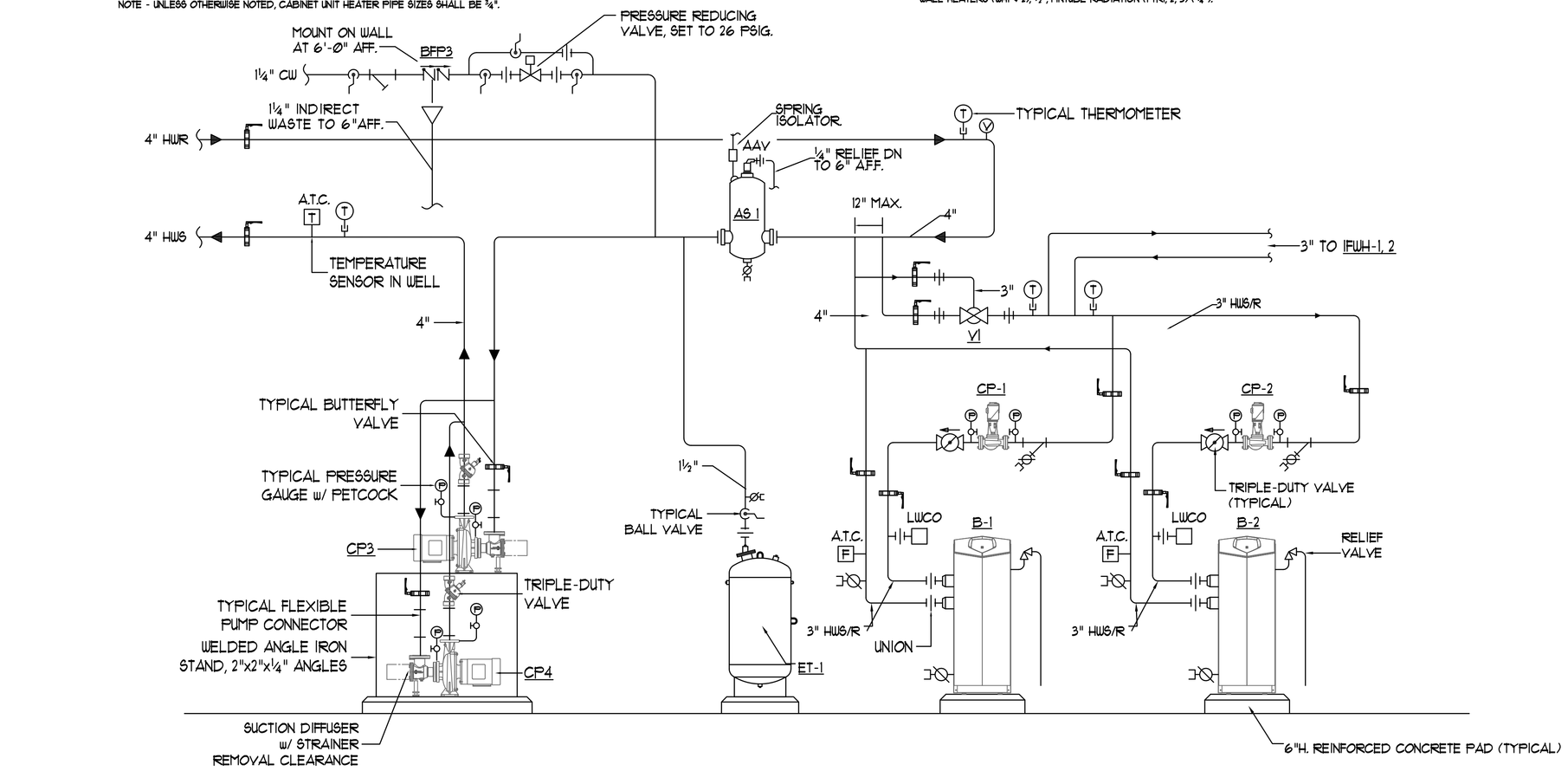

BASE-MOUNTED PUMP / BOILER PIPING SCHEMATIC

NTS

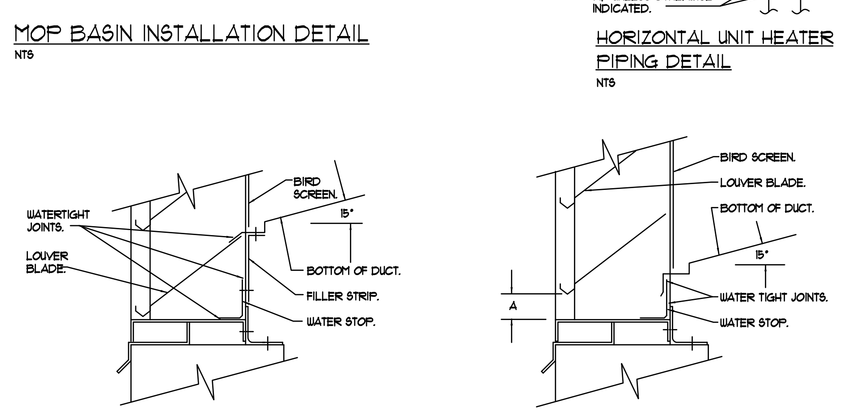

MODIFIED LOUVER DETAIL

NTS

LOUVER CONNECTION DETAIL

NTS

NOTE TYPICAL FOR LOUVERS AND BLOCK VENTS. IF DIMENSION "A" IS LESS THAN 1 INCH SEE MODIFIED LOUVER DETAIL THIS SHEET (LOUVERS ONLY.)

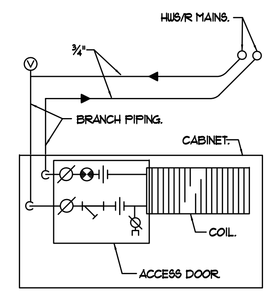

CABINET UNIT HEATER PIPING DETAIL

NTS

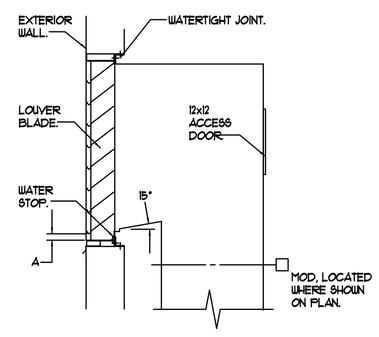

LOUVER DETAIL WITH DUCT FROM BELOW

NTS

NOTE IF DIMENSION "A" IS LESS THAN 1 INCH SEE MODIFIED LOUVER DETAIL THIS SHEET.

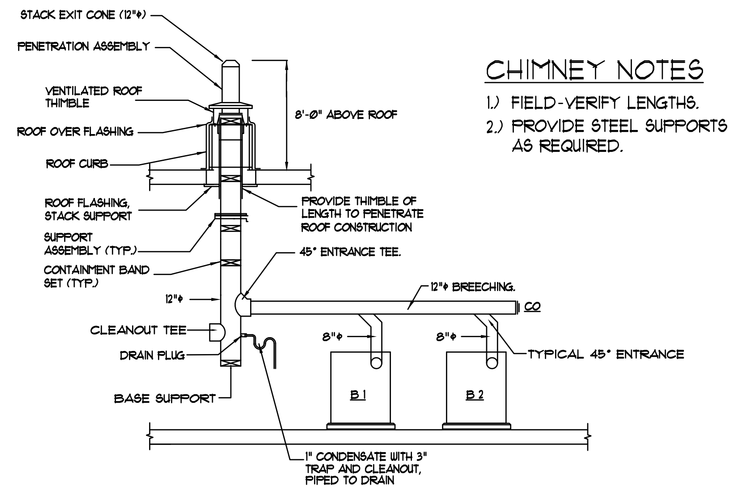

CHIMNEY NOTES

1.) FIELD-VERIFY LENGTHS.
2.) PROVIDE STEEL SUPPORTS AS REQUIRED.

TYPICAL CHIMNEY STACK DETAIL

NTS

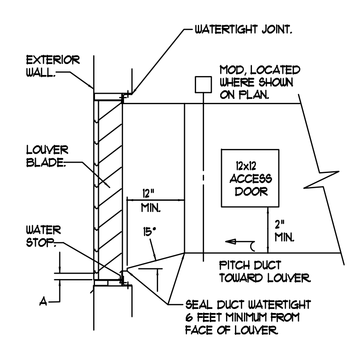

LOUVER DETAIL WITH HORIZONTAL DUCT

NTS

NOTE IF DIMENSION "A" IS LESS THAN 1 INCH SEE MODIFIED LOUVER DETAIL THIS SHEET.

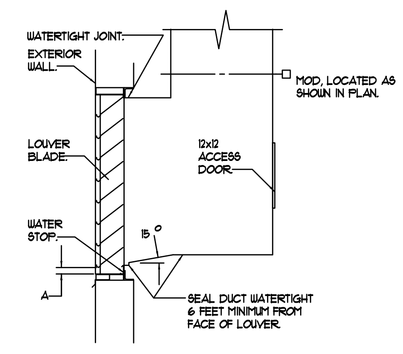

LOUVER DETAIL WITH DUCT FROM ABOVE

NTS

NOTE IF DIMENSION "A" IS LESS THAN 1 INCH SEE MODIFIED LOUVER DETAIL THIS SHEET.

MECHANICAL & PLUMBING LEGEND

NOTE USE SYMBOLS AND ABBREVIATIONS AS APPLICABLE FOR THIS MECHANICAL DRAWING SET. SOME SYMBOLS AND ABBREVIATIONS IN THIS LEGEND MAY NOT APPLY.

SYMBOL	DESCRIPTION
CA	COMPRESSED AIR PIPING (CA)
C	CONDENSATE DRAIN PIPING (C)
CTR	COOLING TOWER RETURN PIPING (CTR)
CTS	COOLING TOWER SUPPLY PIPING (CTS)
CWR	CHILLED WATER RETURN PIPING (CWR)
CWS	CHILLED WATER SUPPLY PIPING (CWS)
FOR	FUEL OIL RETURN PIPING (FOR)
FOS	FUEL OIL SUPPLY PIPING (FOS)
G	GAS PIPING (G)
HWR	HOT WATER RETURN PIPING (HWR)
HWS	HOT WATER SUPPLY PIPING (HWS)
RL	REFRIGERANT LIQUID PIPING (RL)
RG	REFRIGERANT GAS PIPING (RG)
LTHWR	LOW TEMP HOT WATER RETURN PIPING (LTHWR)
LTHWS	LOW TEMP HOT WATER SUPPLY PIPING (LTHWS)
	SANITARY PIPING BELOW FLOOR (SAN)
	SANITARY PIPING ABOVE FLOOR (SAN)
	SANITARY VENT PIPING
RWL	RAINWATER LEADER ABOVE SLAB (RWL)
	DOMESTIC COLD WATER PIPING (CW)
	DOMESTIC HOT WATER PIPING (HW)
	RECIRCULATED HOT WATER PIPING (RHW)
	PIPE CAP
	DIRECTION OF FLUID FLOW
	ELBOW UP
	ELBOW DOWN
	PIPE TEE UP
	PIPE TEE DOWN
	PIPE REDUCER
	PIPE WITH GUIDE
	PIPE WITH ANCHOR
	BUTTERFLY VALVE
	OS & Y GATE VALVE
	BACKFLOW PREVENTER (BFP)
	CHECK VALVE
	BALANCING VALVE (ADJUSTABLE)
	AUTOMATIC FLOW CONTROL VALVE
	RELIEF VALVE (RV)
	BALL VALVE
	BALL VALVE
C	3/4" BALL VALVE WITH 3/4" HOSE END
	GATE VALVE
	PRESSURE REDUCING VALVE
	FUSIBLE VALVE
	STRAINER w/ BLOWDOWN BALL VALVE
	2-WAY CONTROL VALVE
	SOLENOID VALVE
	3-WAY CONTROL VALVE
	3-WAY CONTROL VALVE (TOP VIEW)
	4-WAY CONTROL VALVE (TOP VIEW)

SYMBOL	DESCRIPTION
	2 BUTTERFLY VALVES w/ SINGLE ACTUATOR
	BUTTERFLY VALVE w/ ACTUATOR
	TRIPLE-DUTY VALVE
	UNION
	PIPE FLANGE
CO2	CARBON DIOXIDE SENSOR
	BASE MOUNTED PUMP
	CARTRIDGE TYPE INLINE PUMP
	VERTICAL INLINE PUMP
FC	FLEXIBLE PIPE CONNECTION (FC)
	PITCH DOWN
	PETCOCK
	PRESSURE GAGE WITH GAGE COCK
	THERMOMETER IN WELL
	WATER FLOW SWITCH
	PRESSURE SWITCH OR SENSOR
	IMMERSION TEMPERATURE SENSOR
	DUCT MOUNTED SMOKE DETECTOR
	ROOM TEMPERATURE SENSOR
	THERMOSTAT OR SENSOR ON WALL
G	TEMP. SENSOR w/ TAMPERPROOF GUARD
	MANUAL AIR VENT
	NOTE TAG (NUMBER)
25Φ	AIR DEVICE TAG (LETTER) WITH CFM
	ROOM NUMBER
	TURNING VANES
	DUCT w/ MANUAL DAMPER
	DUCT w/ FLEXIBLE CONNECTION (FC)
	LAGGED DUCT
	DUCT w/ ACOUSTIC LINING
	DUCT w/ SQUARE-TO-ROUND TRANSITION
	FLEXIBLE DUCT
MD	MOTOR OPERATED DAMPER
	AIRFLOW OUT
	AIRFLOW IN
Ø	DIAMETER OR FLAT OVAL
FD	FIRE DAMPER
	CONNECT TO EXISTING
	ROUND OR FLAT OVAL DUCT DOWN
	ROUND OR FLAT OVAL DUCT UP
	SUPPLY DIFFUSER
	RETURN GRILLE
	STEAM TRAP
	WATER HAMMER ARRESTOR
A / M3	SECTION REFERENCE

ABBREVIATION	DESCRIPTION
AAV	AUTOMATIC AIR VENT
AD	ACCESS DOOR
AFF	ABOVE FINISHED FLOOR
AHU-#	AIR HANDLING UNIT TAG
AFSD	ADJUSTABLE FLOW STATION FOR DISPLACEMENT DIFFUSERS
AMPS	AMPERES
AP	ACCESS PANEL
APD	AIR PRESSURE DROP
AS-#	AIR SEPARATOR TAG
ATC	AUTOMATIC TEMPERATURE CONTROL
B-#	BOILER TAG
BD-#	BYPASS DAMPER TAG
BFP-#	BACKFLOW PREVENTER TAG
BHP	BRAKE HORSEPOWER
BTUH	BRITISH THERMAL UNITS PER HOUR
B.S.	BELOW SLAB
CA	COMPRESSED AIR PIPING
CFM	CUBIC FEET PER MINUTE
CHLR-#	CHILLER TAG
CO	CLEANOUT
CONV-#	CONVECTOR TAG
CUH-#	CABINET UNIT HEATER TAG
CP-#	CIRCULATING PUMP TAG
CT-#	COOLING TOWER TAG
Cv	VALVE COEFFICIENT
CW	COLD WATER
CHWS/R	CHILLED WATER SUPPLY AND RETURN
DB	DRY BULB
dB RE	DECIBELS RELATIVE TO
DC	DOUBLE CHECK
DCA	DOUBLE CHECK ATMOSPHERIC
DEG F	DEGREES FAHRENHEIT
DIA	DIAMETER
DWI	DOWN IN WALL
DN	DOWN
EA	EXHAUST AIR
EAT	ENTERING AIR TEMPERATURE
EDB	ENTERING DRY BULB
EDC-#	ELECTRIC DUCT COIL TAG
EER	ENERGY EFFICIENCY RATIO
EF-#	EXHAUST FAN TAG
EFF	EFFICIENCY
EG-#	EXHAUST GRILLE TAG
ER-#	EXHAUST REGISTER TAG
ESP	EXTERNAL STATIC PRESSURE
ET-#	EXPANSION TANK TAG
EWB	ENTERING WET BULB
EWH-#	ELECTRIC WATER HEATER TAG
EWT	ENTERING WATER TEMPERATURE
EXG	EXISTING

ABBREVIATION	DESCRIPTION
EV-#	EXHAUST VENT TAG
FC	FLEXIBLE CONNECTION
FCO	FLOOR CLEANOUT
FD	FIRE DAMPER
FD-#	FLOOR DRAIN TAG
FLA	FULL LOAD AMPS
FLG	FUEL LEVEL GAUGE
FOR	FUEL OIL RETURN
FOS	FUEL OIL SUPPLY
FPHB	FROST PROOF HOSE BIBB
FPM	FEET PER MINUTE
FS-#	FLOOR SINK TAG
FT	FEET
FTR-#	FINTUBE RADIATION TAG
GA	GAGE
GAL	GALLONS
GFWH-#	GAS FIRED WATER HEATER TAG
GPH	GALLONS PER HOUR
GPM	GALLONS PER MINUTE
GUH-#	GAS UNIT HEATER TAG
HC-#	HEATING COIL TAG
HP	HORSEPOWER
HRV-#	HEAT RECOVERY VENTILATOR TAG
HW	HOT WATER
HWS/R	HOT WATER SUPPLY AND RETURN
I=B=R	INSTITUTE OF BOILER AND RADIATOR MANUFACTURERS
IFWH-#	INDIRECT FIRED WATER HEATER TAG
IN.	INCHES
IV-#	INTAKE VENT TAG
L-#	LOUVER TAG
LAT	LEAVING AIR TEMPERATURE
LB	POUNDS
LD-#	LINEAR DIFFUSER TAG
LMP	LEAK MONITORING PANEL
LTHWS/R	LOW TEMPERATURE HOT WATER
LWA	LOCKED ROTOR AMPS
LWCO	LOW WATER CUTOUT
LWT	LEAVING WATER TEMPERATURE
MAX	MAXIMUM
MBH	THOUSANDS OF BTU PER HOUR
MCA	MINIMUM CIRCUIT AMPACITY
MIN	MINIMUM
NC	NOISE CRITERIA
NIC	NOT IN CONTRACT
NTS	NOT TO SCALE
OA	OUTSIDE AIR
OBD	OPPOSED BLADE DAMPER
O.D.	OUTSIDE DIAMETER
OED	OPEN ENDED DUCT
OFUH-#	OIL FIRED WATER HEATER TAG
OPD	OVERCURRENT PROTECTIVE DEVICE

ABBREVIATION	DESCRIPTION
P-#	PLUMBING FIXTURE TAG
PENETN	PENETRATION
PF-#	PADDLE FAN TAG
PSIA	POUNDS PER SQUARE INCH ABSOLUTE
PSIG	POUNDS PER SQUARE INCH GAGE
PVC	POLYVINYL CHLORIDE (PIPE)
RA	RETURN AIR
RD	ROOF DRAIN
RDE	RECOMMENDED DUAL ELEMENT FUSE AMPS
RFH-#	RADIANT FLOOR MANIFOLD TAG
RG-#	RETURN GRILLE TAG
RHW	RECIRCULATED HOT WATER
RLA	RUNNING LOAD AMPS
RPM	REVOLUTIONS PER MINUTE
RPS	REVOLUTIONS PER SECOND
RPZ	REDUCED PRESSURE ZONE
RR-#	RETURN REGISTER TAG
RTU	ROOM TEMPERATURE SENSOR
RV	RELIEF VALVE
RWL	RAINWATER LEADER
SA	SUPPLY AIR
SAN	SANITARY (DRAIN & WASTE)
SD	SMOKE DAMPER
SEER	SEASONAL ENERGY EFFICIENCY RATIO
SF	SUPPLY FAN
SG-#	SUPPLY GRILLE TAG
SP	STATIC PRESSURE
SP-#	SUMP PUMP TAG
SR-#	SUPPLY REGISTER TAG
SQFT	SQUARE FEET
ΔT	TEMPERATURE DIFFERENTIAL
TEMP.	TEMPERATURE
TCP	TEMPERATURE CONTROL PANEL
TMV-#	THERMOSTATIC MIXING VALVE TAG
TSP	TOTAL STATIC PRESSURE
TYP	TYPICAL
UH-#	UNIT HEATER TAG
VAV-#	VARIABLE AIR VOLUME BOX TAG
VB	VACUUM BREAKER
VFD	VARIABLE FREQUENCY INVERTER DRIVE
VTR	VENT THRU ROOF
V/PH/HZ	VOLTS/PHASES/HERTZ
WB	WET BULB
WCO	WALL CLEANOUT
WG	WATER GAGE
WPD	WATER PRESSURE DROP
WSA	WIRE SIZING AMPS
WTD	WATER TEMPERATURE DROP
w/	WITH
ZD-#	ZONE DAMPER TAG

PDT ARCHITECTS
49 DARTMOUTH STREET
PORTLAND, MAINE 04101
207-775-1059
www.pdtarchs.com

COPYRIGHT 2011
PDT Architects
Reuse or reproduction of the contents of this document is not permitted without written permission of PDT Architects.

BENNETT ENGINEERING
MECHANICAL • ELECTRICAL
(207) 865-9475

Pearl Place II
184 Pearl Street

STATE OF MAINE
STEPHEN P. DOEL
No. 3807
LICENSED
PROFESSIONAL ENGINEER

JOB NO.
10-020

DRWN. CHK
SP Doel SP Doel

SCALE:
1/8" = 1'-0"

ISSUE:
August 3, 2011
For Bid

TITLE
MECHANICAL DETAILS SHEET 1

SHEET
M3.2