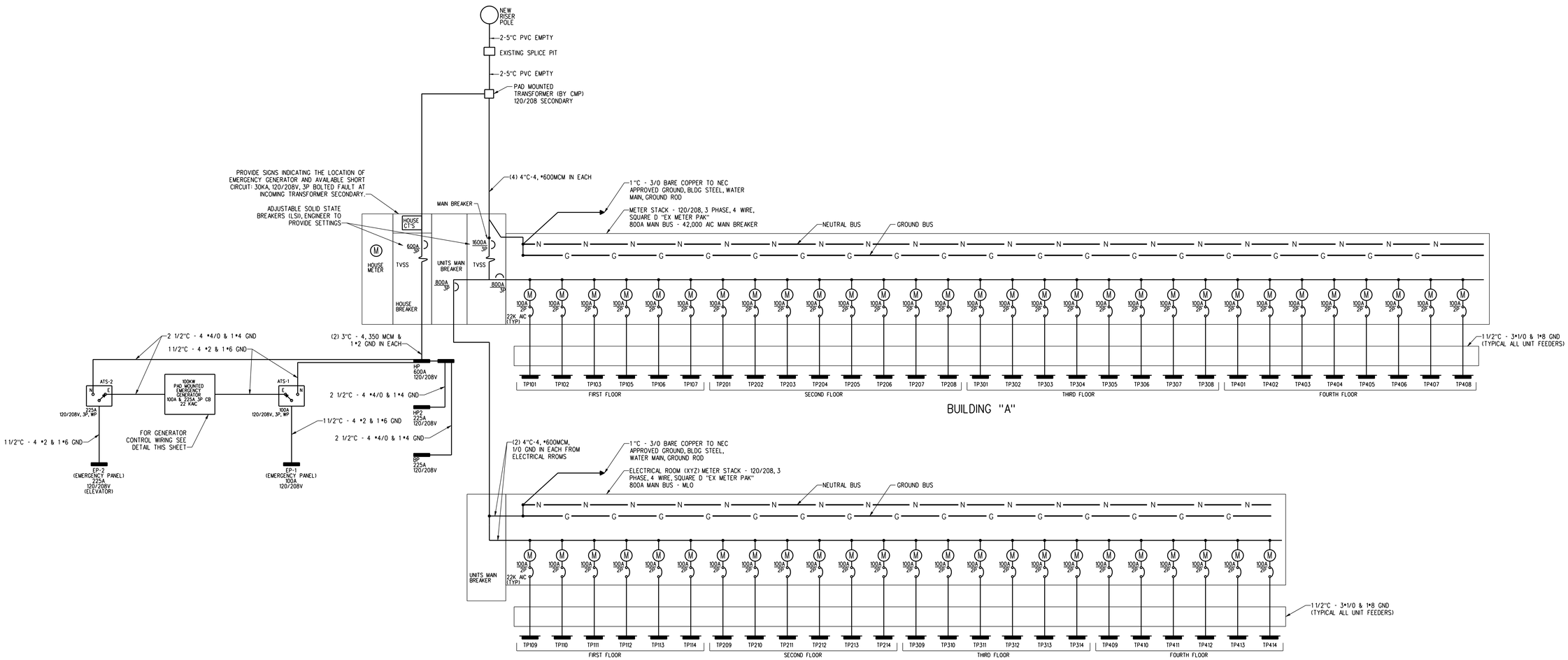

ONE LINE DIAGRAM
SCALE: NONE

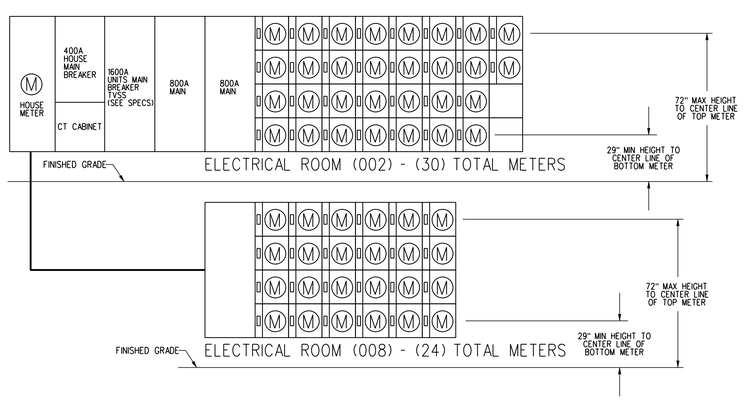

SPLIT METER STACK - (54) TOTAL METERS
SCALE: NONE

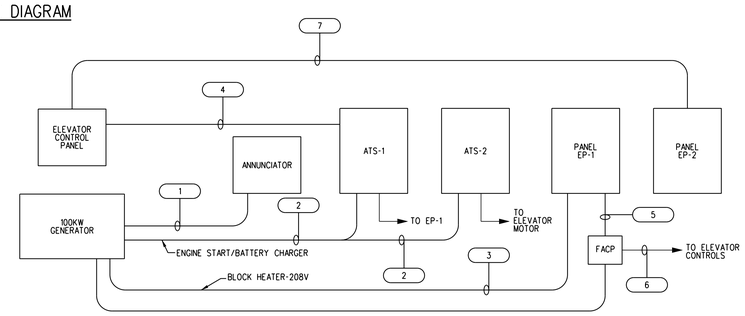

NOTE: 1. ATS-1 CONTAINS THE BATTERY CHARGER

TAG	FROM	TO	CONDUCTORS	CONDUIT	REMARKS
1	GENERATOR	GEN ANNUNCIATION	(1) #16 TSP	3/4"	
2	GENERATOR	ATS-1	(2)#10 + (2)#12 +#10 GND	1"	
3	GENERATOR	ATS-2	(2)#10+#10 GND	1"	
4	ATS-1	ELEVATOR CONTROL PANEL	(2) #14 + #14 GND	3/4"	ELEVATOR MONITOR
5	FACP	HP	(2) #14 + #14 GND	3/4"	SHUNT TRIP MONITOR
6	FACP	ELEVATOR	(2) #14 + #14 GND	3/4"	ELEV. TAMPER SWITCH MONITOR
7	ELEV CONTROLS	EP-1	(2) #12 + #12 GND	3/4"	ELEV 120V POWER

GENERATOR CONTROL WIRING
SCALE: NONE

PDT ARCHITECTS
49 DARTMOUTH STREET
PORTLAND, MAINE 04101
207-775-1059
www.pdtarchs.com

COPYRIGHT 2011
PDT Architects
Reuse or reproduction of the contents of this document is not permitted without written permission of PDT Architects.

BENNETT ENGINEERING
MECHANICAL • ELECTRICAL
(207) 865-9475

Pearl Place II
184 Pearl Street

STATE OF MAINE
LICENSED
PROFESSIONAL ENGINEER

JOB NO.
10-020

DRWN. CHK
TWG WSBJR

SCALE:
AS NOTED

ISSUE:
August 3, 2011
For Bid

TITLE
SCHEDULES, LEGENDS AND DETAILS

SHEET
E3.2