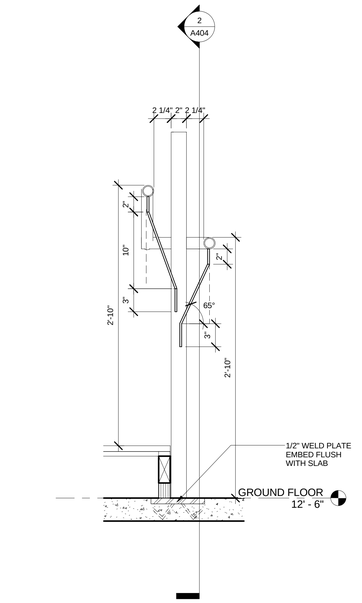

D6 S2 Bottom Stanchion Section
1 1/2" = 1'-0"

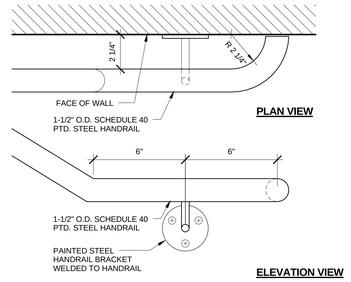

E5 STAIR HANDRAIL TERMINATION
3" = 1'-0"

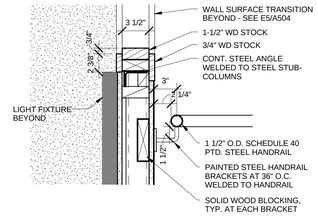

E4 WALL CAP DETAIL & HANDRAIL CONNECTION
1 1/2" = 1'-0"

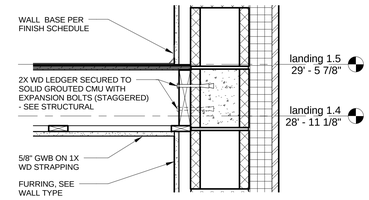

E3 Callout of STAIR S1 SECTION
1 1/2" = 1'-0"

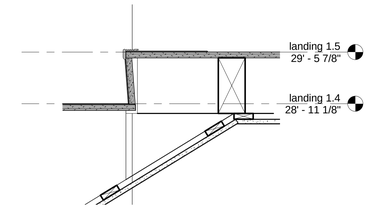

E1 Detail 8
1 1/2" = 1'-0"

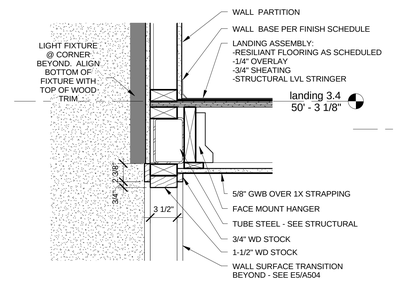

D4 LANDING SUPPORT 2 @ STAIR S2
1 1/2" = 1'-0"

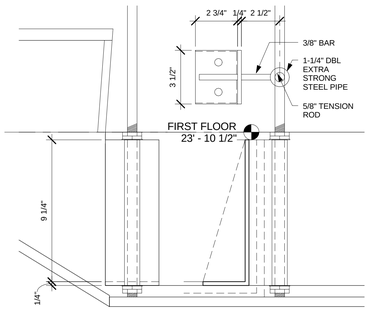

D3 STAIR S2 STEEL LANDING SUPPORT
3" = 1'-0"

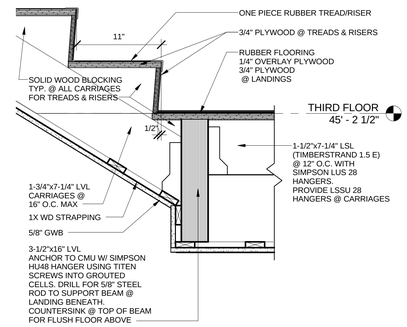

D2 CARRIAGE SUPPORT 1 @ STAIR S2
1 1/2" = 1'-0"

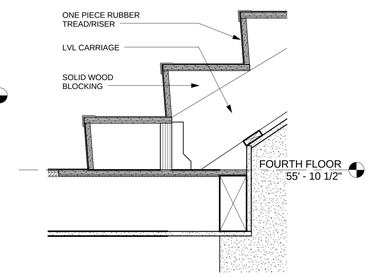

D1 Detail 10
1 1/2" = 1'-0"

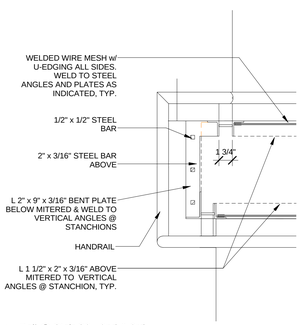

C6 Rail @ Stair S2 - 2nd & 3rd
1 1/2" = 1'-0"

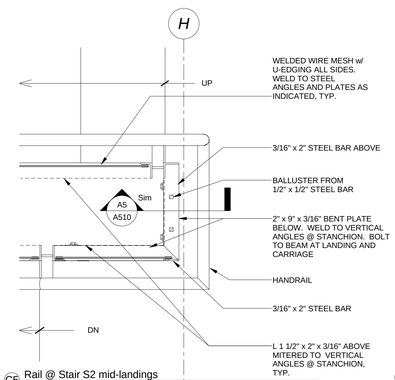

C5 Rail @ Stair S2 mid-landings
1 1/2" = 1'-0"

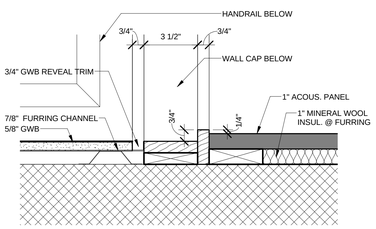

C4 WALL SURFACE TRANSITION
3" = 1'-0"

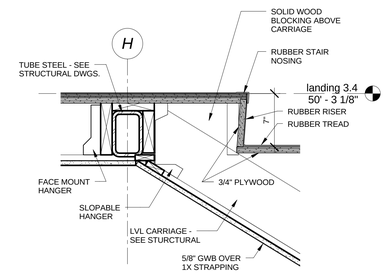

C2 LANDING SUPPORT 1 @ STAIR S2
1 1/2" = 1'-0"

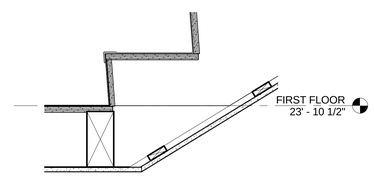

C1 Detail 9
1 1/2" = 1'-0"

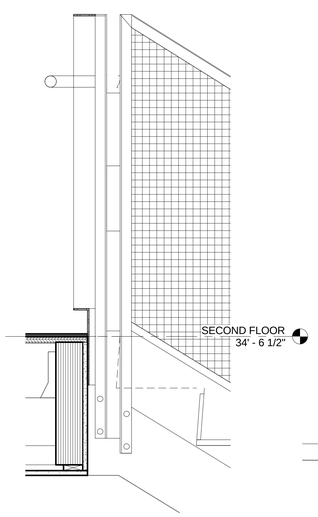

A6 S2 Rail Typical top-flight
1 1/2" = 1'-0"

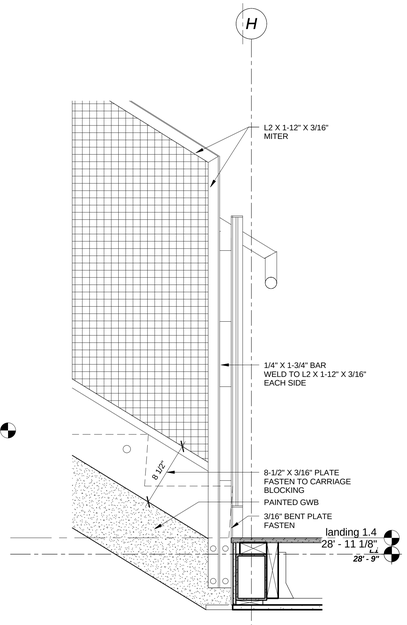

A5 S2 Stanchion @ mid landing
1 1/2" = 1'-0"

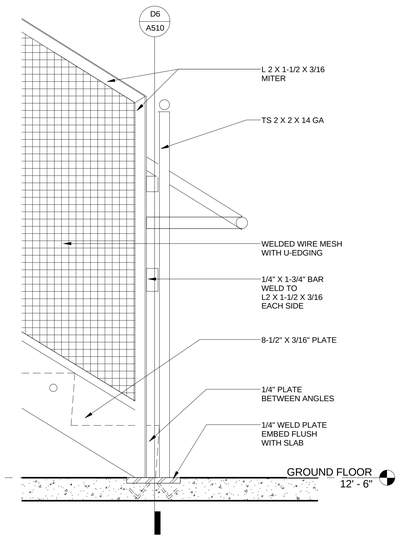

A4 S2 Bottom Stanchion
1 1/2" = 1'-0"

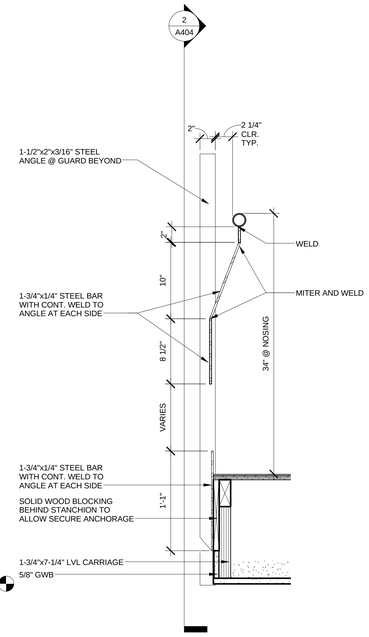

A3 Section @ Typ. S2 rail stanchion
1 1/2" = 1'-0"

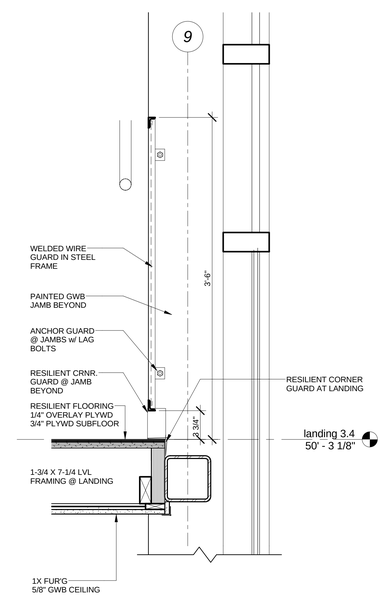

A2 LANDING SUPPORT 3 @ STAIR S2
1 1/2" = 1'-0"

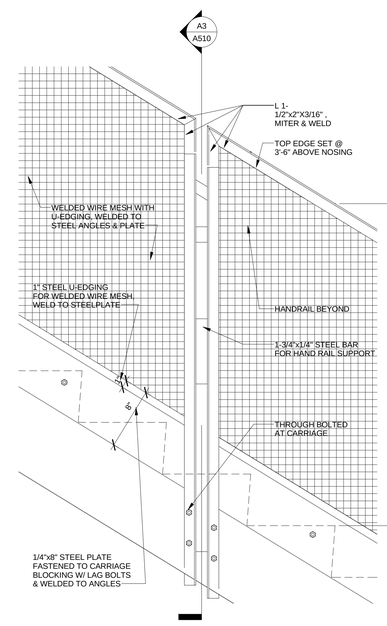

A1 S2 RAIL TYPICAL MID-FLIGHT
1 1/2" = 1'-0"

PDT ARCHITECTS
49 DARTMOUTH STREET
PORTLAND, MAINE 04101
207-775-1059
www.pdtarchs.com

COPYRIGHT
PDT Architects
Reuse or reproduction of the contents of this document is not permitted without written permission of PDT Architects.

307 CUMBERLAND AVENUE
PORTLAND, MAINE 04101
207-797-7290
www.avestahousing.org

AVESTA HOUSING

Pearl Place 2
184 Pearl Street

LICENSED ARCHITECT
ALAN G. KUNIHOLM
No. 2133
STATE OF MAINE

JOB NO.	10020
DRWN.	CHK
	Checker
SCALE:	As indicated
ISSUE	08/03/11
TITLE	STAIR & RAILING DETAILS
SHEET	A510