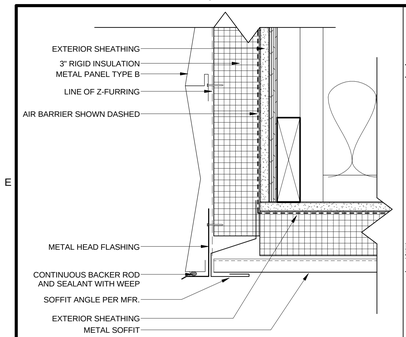

E6 METAL PANEL - SOFFIT @ 2ND FLOOR
3" = 1'-0"

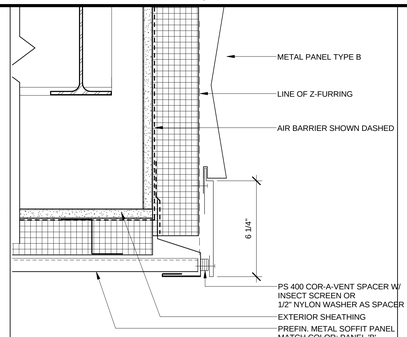

E5 METAL PANEL - SOFFIT DETAIL
3" = 1'-0"

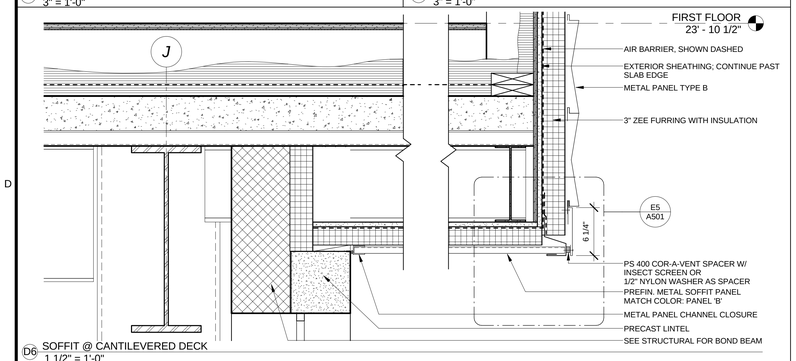

D6 SOFFIT @ CANTILEVERED DECK
1 1/2" = 1'-0"

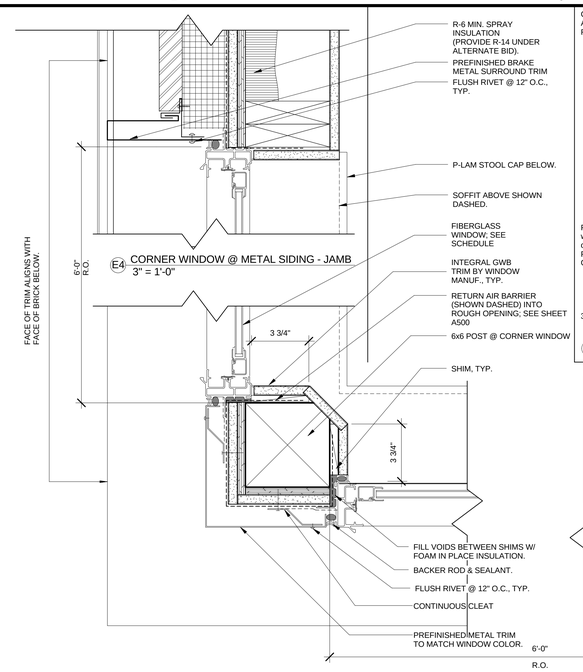

E4 CORNER WINDOW @ METAL SIDING - JAMB
3" = 1'-0"

D4 CORNER WINDOW @ METAL SIDING
3" = 1'-0"

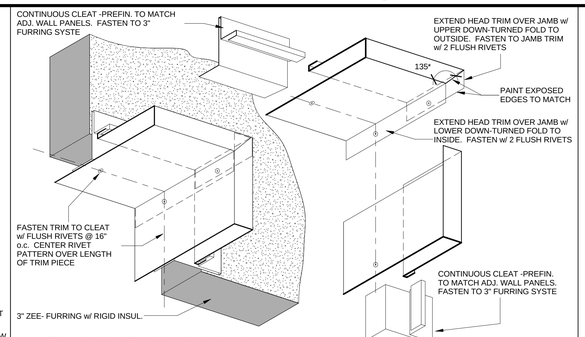

E2 METAL WINDOW TRIM ISO- HEAD & JAMB
3" = 1'-0"

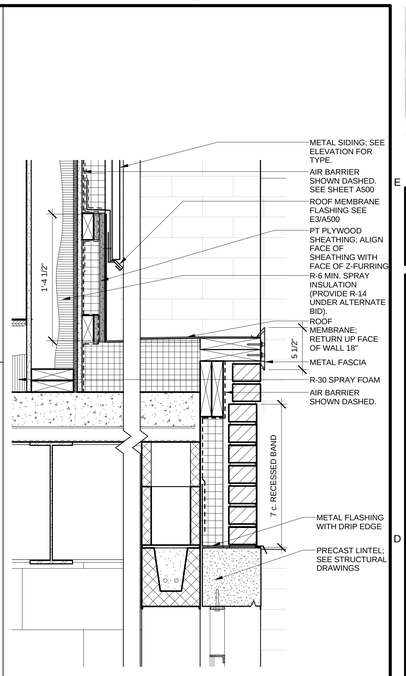

D1 GARAGE ROOF @ RECESS
1 1/2" = 1'-0"

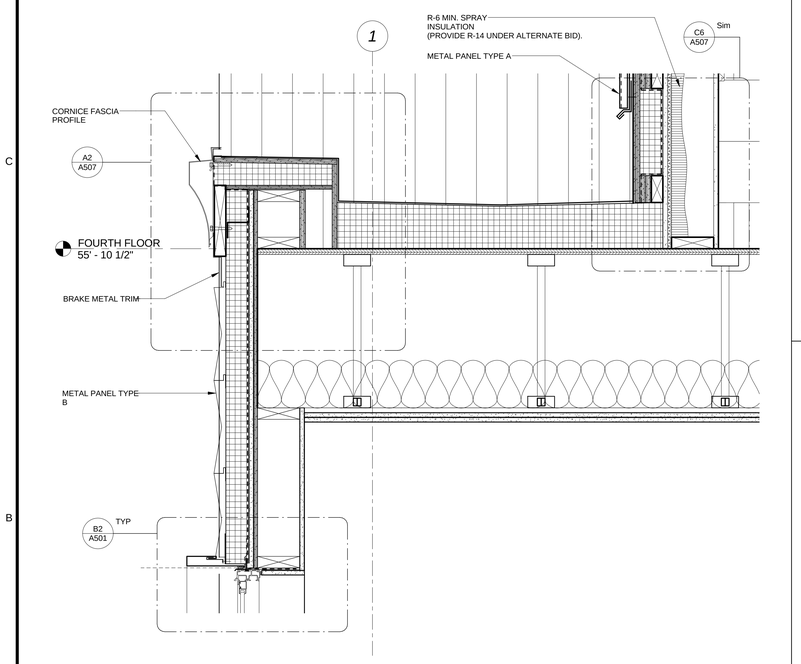

B6 ROOF DETAIL AT SET-BACK
1 1/2" = 1'-0"

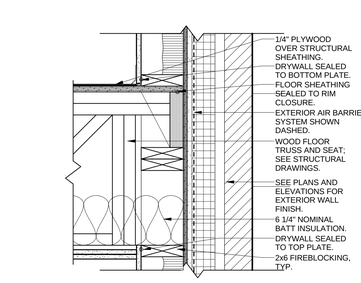

C4 TYPCIAL FLOOR / CEILING ASSEMBLY AT EXTERIOR WALL
1 1/2" = 1'-0"

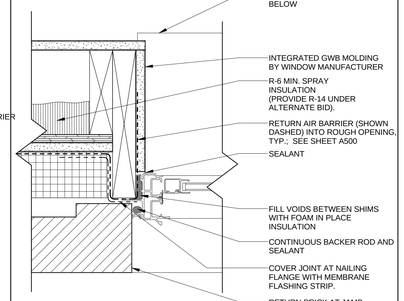

C3 WINDOW JAMB @ BRICK SURROUND
3" = 1'-0"

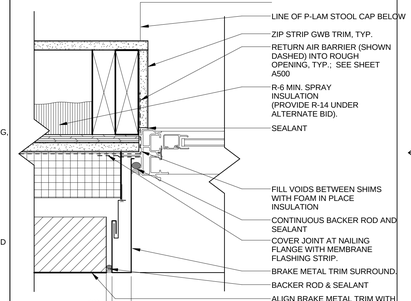

C2 WINDOW JAMB @ BRICK / METAL ABOVE
3" = 1'-0"

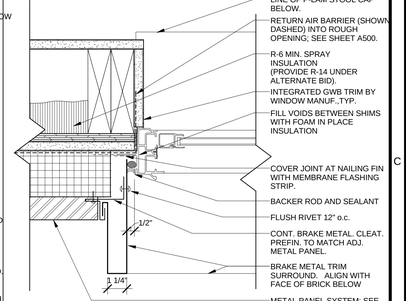

C1 WINDOW JAMB @ METAL SIDING
3" = 1'-0"

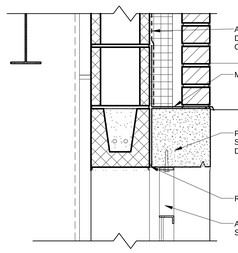

B4 GARAGE GRILLE HEAD
1 1/2" = 1'-0"

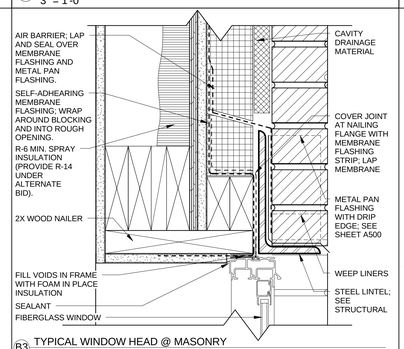

B3 TYPICAL WINDOW HEAD @ MASONRY
3" = 1'-0"

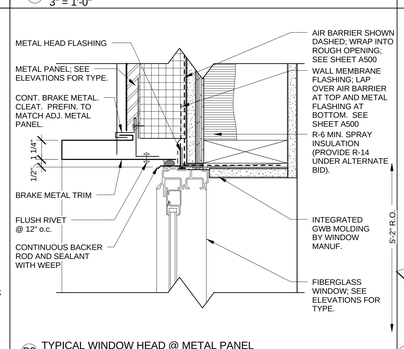

B2 TYPICAL WINDOW HEAD @ METAL PANEL
3" = 1'-0"

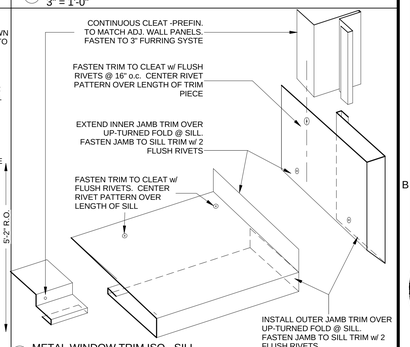

1 METAL WINDOW TRIM ISO - SILL
3" = 1'-0"

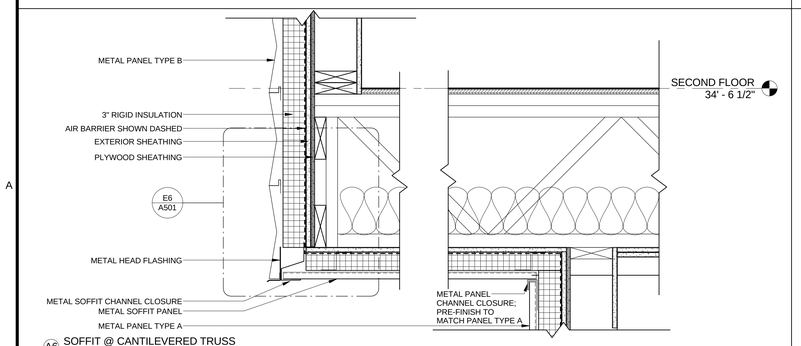

A6 SOFFIT @ CANTILEVERED TRUSS
1 1/2" = 1'-0"

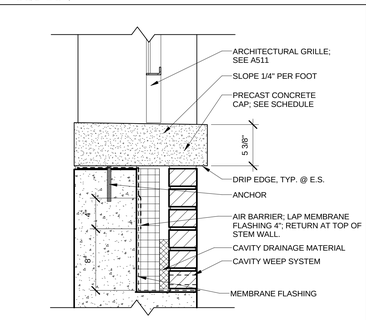

A4 GARAGE GRILLE SILL
1 1/2" = 1'-0"

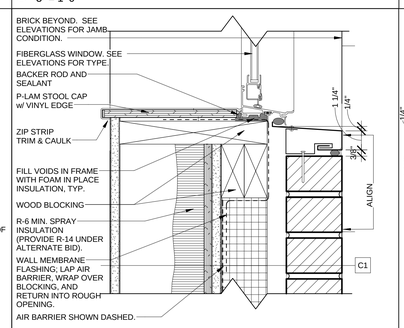

A3 TYPICAL WINDOW SILL @ MASONRY
3" = 1'-0"

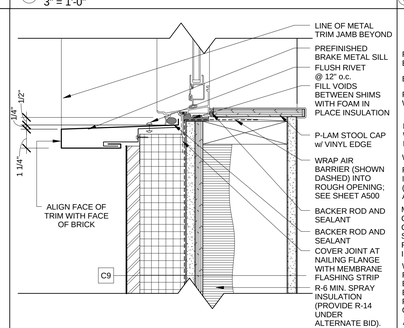

A2 TYPICAL WINDOW SILL @ METAL PANEL
3" = 1'-0"

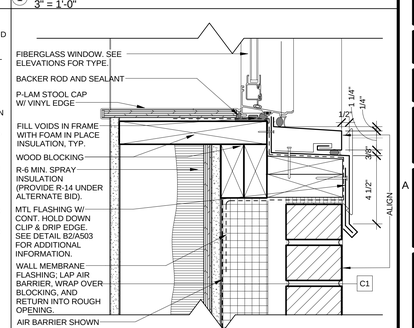

A1 WINDOW SILL @ MASONRY W/ METAL JAMBS
3" = 1'-0"

PDT ARCHITECTS
49 DARTMOUTH STREET
PORTLAND, MAINE 04101
207-775-1059
www.pdtarchs.com

COPYRIGHT
PDT Architects
Reuse or reproduction of the contents of this document is not permitted without written permission of PDT Architects.

307 CUMBERLAND AVENUE
PORTLAND, MAINE 04101
207-774-7329
www.avestahousing.org
AVESTA HOUSING

LICENSED ARCHITECT
ALAN G. KUNIHOLM
No. 2133
STATE OF MAINE

Pearl Place 2
184 Pearl Street

JOB NO.
10020

DRWN. CHK
Checker

SCALE:
As indicated

ISSUE
08/03/11

TITLE
EXTERIOR DETAILS

SHEET
A501