Reviewed for Code Compliance
Inspections Division
Approved with Conditions
Date: 02/22/18

TECHNICAL SPECIFICATIONS

FOR

EIMSKIP

40' X 8' X 9'6" REFRIGERATED CONTAINER

MODEL NO.: MQRS-40HS-065A

SuPoTec® FOAMING SYSTEM

- DOOR, ROOF LINING: Q LINER
- SIDE LINING: HGSS
- ROOF PANEL: HGSS END / MGSS MIDDLE
- SIDE, BASE, DOOR PANEL: MGSS
- END FRAMES AND RAILS: CORTEN
- SCUFF LINER: ALUMINUM EXTRUSION
- COOLING MACHINE: CARRIER THIN LINE

SPECIFICATION NO. : ES-MQRS-40HS-143A-05
ISSUE DATE : May. 10, 2016

Reviewed for Code Compliance
Inspections Division
Approved with Conditions
Date: 02/22/18

C O N T E N T S

NO	TITLE	PAGE
1	General	2
2	Testing and inspection	3
3	Dimensions and ratings	4
4	Materials	5
5	Construction	7
6	Preservation	11
7	Warranty	16
8	Revision list	17

Drawing Reference

NO	TITLE	DRAWING NO.
1	General Arrangement	MQRS-40HS-143A-GA(CR)
2	Base Assembly	MQRS-40BA-30AA
3	Floor Assembly	MQRS-40BF-74AA
4	Front Frame Assembly	MQRS-40FF-01AJ
5	Rear Frame Assembly	MQRS-40RF-31AB
6	Rear Door Assembly	MQRS-40DP-26AA
7	Door Lining Assembly	MQRS-40DL-10AC
8	Side Wall Assembly	MQRS-40SP-36AG
9	Side Lining Assembly	MQRS-40SL-01AD
10	Roof Assembly	MQRS-40RA-07AD
11	Rear Jamb Assembly	MQRS-40RJ-34AC
12	Front Lining Assembly	MQRS-40FL-01AC
13	Baffle Plate Assembly	MQRS-40BP-01AE
14	Reefer Unit Assembly	MQRS-40RU-01AA
15	Marking Arrangement	MQRS-40HS-143A-MA(CR)

Reviewed for Code Compliance
Inspections Division
Approved with Conditions
Date: 02/22/18

1. GENERAL

1.1 Operational environment

The container is designed and manufactured for the transport of frozen, chilled and general cargo in marine, on highway and railway throughout the world.

It must remain serviceable under the operating conditions encountered during each of the above mode of transport, as well as during climatic condition at temperature of minus 30 deg.C to plus 70 deg.C without any effect on the containers strength and water- tightness.

The container is designed to maintain minus 18 deg.C of inside temperature by a refrigeration unit in ambient temperature between minus 25 deg.C and plus 38 deg.C

1.2 Standards and regulations

1) I.S.O. (TC 104 1496/2 -1996)
2) T.I.R. approved by A.B.S.
3) Classification Society: A.B.S.
4) C.S.C. approved by classification society.
5) T.C.T. : No exposed timber components to be used.
6) A.T.P. (Containers to be designed and tested by ATP regulations).
7) Meet USDA cold treatment registration.
8) U.I.C. approved by classification society.
9) I.S.O. 1161 and ABS Section 14 corner casting regulation. The mechanical properties is based on testing of separately cast test bars from the same cast and heat treatment lot as the castings they represent.

1.3 Handling

1) Lifting, loaded or empty, at the top corner fittings vertically by means of spreaders fitted with hooks, shackles or twist-locks.

2) Lifting, loaded or empty, at the bottom corner fittings using slings with terminal fittings at any angle between vertical and 30 degrees to the horizontal.

1.4 Transportation

1) Marine : Eight (8) high stacked (on a level 32,500 kgs ratings)in the ship cell guide and Four(4) high stacked on the deck.

2) Road : On flat bed or skeletal chassis, secured by twist-locks or combination of twist-locks and front penetration pins to lock the two (2) bottom corner fittings.

3) Rail - road

- COFC (Container-on-flatcar) : secured by twist-locks or equivalent.
- Double stacking on the train.
- TOFC (Trailer-on-flatcar) : secured to semi-trailer chassis.

Reviewed for Code Compliance
Inspections Division
Approved with Conditions
Date: 02/22/18

2. TESTING AND INSPECTION

2.1 Proto-type container

A proto-type container manufactured in accordance with this specification will be tested according to the procedures described in the ISO 1496/2 and the Classification Society's Rules. Upon completion of the test, the container will be certified by the society with a test report showing the deflection and/or variations with in the criteria of the permissible values specified in society's Rules.

1) Stacking		102,375 kgs/post	(225,690 lbs)
- Internal load		1.8R-T	
2) Top lifting		2 R-T	
3) Bottom lifting		2 R-T	
4) Restraint		R / rail.	
5) End wall strength		0.4 P	
6) Side wall strength		0.6 P	
7) Roof strength		300 kgs	(660 lbs)
8) Floor strength		7,260 kgs	(16,000 lbs)
9) Racking-	Transverse	15,240 kgs	(33,600 lbs)
	Longitudinal	7,620 kgs	(16,800 lbs)
10) Water proofness		By means of spray rack system nozzle Pressure 1 kg/sq.cm.	
11) Air tightness		25.4 mm (1") Aq. Internal pressure.	
12) Thermal test			
13) Cooling performance test			

Where R: Max. Gross Weight
P: Max. Payload
T: Tare Weight

2.2 Production Line Container

Every container is manufactured under the effective quality control procedures to meet the specified standards.
After completion, all containers are subject to visual check, door operation check, etc.

2.3 Batch test

Minimum one (1) container per every production batch shall be tested for structure, Heat leakage.

1) Air leakage test
   -Frequency: Every one (1) unit per 10 containers.
2) Structure test
   -Item: Stacking
   Top lifting
   Floor strength
   Transverse racking
   -Frequency: Every one (1) unit per 200 containers.
3) Thermal test
   -Frequency: Every one (1) unit per 200 containers

RESURGAM CITY OF PORTLAND, MAINE
Reviewed for Code Compliance
Inspections Division
Approved with Conditions
Date: 02/22/18

3. DIMENSIONS AND RATINGS

- The dimensions and tolerances apply when measured at the temperature of 20 deg.C (68 deg.F) according to ISO 668-2013(E).

3.1 External Dimensions

	mm		ft	-	in	
Length (overall)	12,192	+0, -10	40	-	0	+0, -3/8
Width (overall)	2,438	+0, - 5	8	-	0	+0, -3/16
Height (overall)	2,896	+0, - 5	9	-	6	+0, -3/16

3.2 Internal Dimensions (nominal)

	mm		ft	-	in		
Length	11,596	+0, -10	38	-	0	9/16	+0, -3/8
Width	2,290	+0, -10	7	-	6	3/16	+0, -3/8
Height	2,545	+5, -10	8	-	4	3/16	+3/16, -3/8

3.3 Door Opening Dimension (nominal)

	mm		ft	-	in		
Width	2,290	+0, -5	7	-	6	3/16	+0, -3/16
Height	2,557	+0, -5	8	-	4	11/16	+0, -3/16

3.4 Inside cubic capacity (nominal)

cu.m	cu.ft
67.5	2,384

3.5 Ratings

	kgs	lbs
Tested max. gross weight	34,000	74,960
Payload	29,530	65,100
Tare weight	4,470	9,860

(Including reefer unit 480 kgs) (Tolerance +2%, -2%)

3.6 Air Leakage Rate

Maximum Air Leakage Rate (Q): 3.0 cu.m./hr. (at 25.4 mm Aq.)

3.7 Total Heat Transmission Rate

Estimated Heat Leakage Rate (U10): 43 W/K (37 kcal/hr. deg.C max.)

Reviewed for Code Compliance
Inspections Division
Approved with Conditions
Date: 02/22/18

4. MATERIALS

4.1 Steel

	Description	Material	Yield point kg/sq.mm(min.)	Tensile strength kg/sq.mm(min.)
1)	Corrosion resistant high tensile steel	SPA-H	35	49
2)	High tensile rolled steel	SS490	29	50
3)	Mild carbon steel	SS400	25	41
4)	Stainless steel (H.G.S.S.)	SUS304	21	52
		SUS436	25	46
		MCI D-7	27	61
		JFE443CT	21	40
5)	Muffler grade stainless steel (M.G.S.S.)	SUS410L, SUH409L	20	36

4.2 Aluminum

1)	Extrusion	6082-T6	26	29
		6061-T6	25	27
		6063-T5	11	15
2)	Sheet	5052-H34	18	24

4.3 Q Liner

Glass fiber with PP resin

Reviewed for Code Compliance
Inspections Division
Approved with Conditions
Date: 02/22/18

4.4 Sealant

1) Polyurethane or MS-polymer sealing compound. Sealant for the interior of container must be approved by FDA.

2) Butyl sealing compound (Unexposed)

3) Silicone sealing compound (Some exterior area)

4.5 Foam tape

1) 1.6 mm (0.063") thick, P.V.C. (Polyvinyl chloride) foam tape, one side adhesive, aluminum grey colored.

2) 3.0 mm (0.118") thick, E.P.D.M.(Ethylene Propylene Diane Monomer) anti-electrolysis foam gasket, black colored.

4.6 Insulation

1) Material: Environmental friendly 0-Ozone Depleting Potential and low Global Warming Potential, SuPoTec® (Modified Cyclo-pentane) blown rigid polyurethane foam

2) Nominal thickness and density:

	Thickness	overall density	core density
Base	95 mm	50 kg/cu.m	40 - 47 kg/cu.m
Side	65 mm	45 kg/cu.m	35 - 42 kg/cu.m
Roof	90 mm	45 kg/cu.m	35 - 42 kg/cu.m
Door	78 mm	55 kg/cu.m	45 - 52 kg/cu.m

3) Surface preparation for PUR. Foam contact area:

- Following unpainted bare metal surfaces of PUR foam contacting areas to be coated with foam adhesive or primer, but inaccessible area by automatic spraying system such as the area behind omega reinforcement flange and scuff liner backside etc. will be excluded.

- Side panel and lining
- Aluminum T-floor
- Base panel assembly
- Door panel
- Roof panel
- Frames

Reviewed for Code Compliance
Inspections Division
Approved with Conditions
Date: 02/22/18

5. CONSTRUCTION

5.1 Refrigeration machinery :

-Model : Carrier Thin Line

5.2 Base structure

-Sub-floor: M.G.S.S., 1.0 mm thick main, 7 mm deep corrugation and SPA-H, 3.2 mm rear end welded to the bottom side rail on one side of sub-floor.

-Gooseneck tunnel : SPA-H, 4.0 mm, one (1) piece pressed hat section.

-Cross member : SPA-H 4.0 mm, seven (7) pieces pressed trapezium section.

5.3 Flooring

-Floor stringer : P.E. located between cross member and aluminum floor board.

-Floor board : Aluminum 6082-T6, 63.5 mm high, extruded round header section. Butt welding by automatic MIG welding machine.

5.4 Front frame structure

-Front corner post : SPA-H, 6.0 mm (0.236") outer and 2.0 mm (0.079") inner. Two (2) elements fabricated integral section.

-Front top rail : SPA-H, 4.0 mm (0.157") one (1) piece top rail with 4.5 mm (0.177") doublers plates

-Front bottom rail : SPA-H, 4.0 mm (0.157") thick outer and 3.2 mm (0.126") gusset constructed special section.
Two (2) triangle gussets are welded to both ends of the front bottom rail and corner castings to reinforced strength.

5.5 Rear frame structure

-Rear corner post : SPA-H, 6.0 mm (0.236") thick outer, inner "A" and 8.0 mm (0.315") inner "B" with 8.0 mm (0.315") stiffener.

-Rear header : SPA-H, 4.0 mm (0.157") outer and 3.2 mm (0.126") inner with 4.5 mm (0.177") double plates, constructed special section with four (4) gussets behind the cam keeper.

-Rear sill : SPA-H, 6.0 mm (0.236") outer and SPA-H, 4.0 mm (0.157") inner welded to SS400 DIA. 25 reinforcement. Two (2) cone damage protectors are welded to the both ends of the rear sill and corner castings.

Reviewed for Code Compliance
Inspections Division
Approved with Conditions
Date: 02/22/18

-Rear jamb post : Rigid P.V.C., extruded special section.

5.6 Door assembly

-Door panel : M.G.S.S., 1.6 mm (0.063") thick outer facing with SPA-H reinforced member and E.P.D.M. rubber (4) edges door gasket fastened. Attached two chain holder to the inner locking rods on the door.
Each door to be capable of opening through 270 degrees.

-Door locking gear : SAEJIN model SJ-88M/2M type or equivalent.
34 mm (1.339") outer locking bar diameter.

-Hinge assembly : Hinge blade - SS400, 8 mm thick, hot dip galvanized.
Hinge pin - 12.7 mm dia. SUS304
Hinge washer - SUS304
Hinge bush – Nylon 66

-Door frame : High impact rigid plastic, extrusion.

-Door inner gasket :E.P.D.M, extruded double lip section gasket and vulcanized corners to make an one (1) piece.

-Door fastener : Door hardware including door hinges assembly to be fastened with galvanized carbon steel bolts and nuts.

-Door lining : Q Liner, 2.0 mm (0.079") thick flat panel.

5.7 Side assembly

-Top side rail : SPA-H, 4.0 mm thick, one (1) piece roll formed sloped open section.

-Bottom side rail : SPA-H, 4.0 mm thick lower and 3.0 mm upper.
Both end constructed SS400, 8 mm thick side protector to be welded to corner casting.

-Side panel : M.G.S.S., 0.8 mm thick main & 1.2 mm thick end corrugated type.
Each sheet inverted ribs to be automatically butt-welded together into one panel and continuously welded to the exterior of peripheral frame.

-Side post : SPA-H, 1.6 mm thick, spot welded to side panel.

CITY OF PORTLAND, MAINE RESURGAM
Reviewed for Code Compliance
Inspections Division
Approved with Conditions
Date: 02/22/18

-Side stringer : Rigid P.V.C., extruded special section.

-Side lining : H.G.S.S. , 0.7 mm (0.028") thick, 7 mm deep inverted small corrugation panel.
Automatically butt-welded together to form one (1) piece.

-Scuff liner : Aluminum 6061-T6, 2.7 mm (0.106") thick, 410 mm high, full length one piece Alum. extrusion to be installed at bottom of each side lining panel.

5.8 Roof assembly

-Roof panel: 7 pieces of M.G.S.S. & 2 pieces of H.G.S.S., 0.8 mm thick main and H.G.S.S., 0.8 mm thick end.
Each sheet with 4 mm high standing corrugation to be automatically butt-welded together into one panel and continuously welded to the exterior of peripheral frame.

-Roof lining : Q Liner, 1.5 mm (0.060") thick flat panel.

-Roof post : M.G.S.S., 0.8 mm thick, spot welded to roof panel

-Roof stringer : Rigid P.V.C., extruded

5.9 Additional attachment

1) Floor drain:
Four (4) kazoo drains to be provided at the front and rear gutter.

2) Generator mounting device:
Clip on type generating set at both front corner posts and front top rail to be equipped with connection points to accommodate the clip-on generating set.

3) Lashing bar
Twenty-six (26) lashing bars to be installed between floor tees in each container. (safe working load of 1,000 kgs)

Reviewed for Code Compliance
Inspections Division
Approved with Conditions
Date: 02/22/18

5.10 Marking

All containers are to be marked in accordance with the latest CSC and TIR requirements as well as ISO, as modified by customer, specified marks.

1) Decal : - Owner's code and serial number.
   - Size and type code.
   - Capacity marking.
   - Certifying agency emblem.
   - Others.

2) Plates : Data plate (C.S.C./T.I.R. and T.C.T., etc..).

3) Permanent identification
   Stamped 9.5 mm (3/8") high digits the owner's serial number on the top face of the left hand rear lower corner fitting.

Reviewed for Code Compliance
Inspections Division
Approved with Conditions
Date: 02/22/18

6. PRESERVATION

6.1 Surface preparation of steel parts

1) Hot dip galvanized to 65 microns.
   - Door locking rod assembly with brackets.
   - Door T.I.R. slam plate.
   - Hinge blades.

2) Zinc plated to a minimum 13 microns
   - Tapping screw and steel fasteners.

3) Surface preparation prior to painting shall be accordance with the section 6.3 of this specification for surface preparation procedure..

Reviewed for Code Compliance
Inspections Division
Approved with Conditions
Date: 02/22/18

6.2 Painting

Total DFT meets 80/20 rule.

1) Coverage for DFT should be minimum 80% of the total painted surface with specified DFT mentioned below.

2) The rest of Maximum 20% of the painted surface should not have a DFT below 80% of the specified DFT.

6.2.1 Steel frames

Description	D.F.T. (microns)
Outside surface	
Hot Zinc spray	40-60
Zinc phosphate epoxy primer	50
Polyurethane top coat	60
Total (Excluding hot spray Zinc galvanizing)	110

6.2.2 M.G.S.S. /H.G.S.S. material parts

Outside surface	
Zinc phosphate epoxy primer	50
Polyurethane top coat	60
Total	110

6.2.3 M.G.S.S. panels (Only door panels)

Outside surface	
Zinc phosphate epoxy primer	50
Polyurethane top coat	60
Total	110

6.2.4 Top coat color : RAL 9010 white

6.2.5 Paint supplier : KCC or Hempel (Except shop primer)

Reviewed for Code Compliance
Inspections Division
Approved with Conditions
Date: 02/22/18

6.3 Surface preparation procedure

Total density, roughness of shot blasting and DFT of Metallizing meets 80/20 rule.

1) Coverage for density, roughness and DFT should be minimum 80% of the total preparation surface with specified density, roughness and DFT mentioned below.

2) The rest of maximum 20% of the preparation surface should not have a density, roughness and DFT below 80% of the specified density, roughness and DFT.

6.3.1 Prior to assembly

6.3.1.1 Shot blasting (SPA-H parts)

A. Shot blasting

1) Abrasive material: Grit, ball, cut wire or their mixture shall be used as abrasive material for blasting. Mixture shall be suitably adjusted to achieve the required quality standard.
2) Blasting condition
   - Surface preparation grade: ISO 8501-1, 2007 Sa2.0
   - Density: Avg. 70 %
   - Roughness: 25– 40u

B. Shop primer coating

Around 10 microns

6.3.2 After assembly

6.3.2.1 End frame station

A. Shot blasting

Prior to hot spray Zinc metalizing, SPA-H parts will be shot blasted.

Blasting condition

- Surface preparation grade: ISO 8501-1, 2007 Sa2.5
- Density: Avg. 95%
- Roughness: 40 - 60u (No greater than 80 microns)

B. Hot spray Zinc metalizing

1) Application standard: BS EN ISO 2063 Metallic and other inorganic coating
   Thermal spraying-Zinc, aluminum and their alloys.
2) 40-60 microns to exposed area

C. Primer coating

50 microns to exposed surface

Reviewed for Code Compliance
Inspections Division
Approved with Conditions
Date: 02/22/18

6.3.2.2 Base frame station

A. Shot blasting

Prior to hot spray Zinc metalizing, SPA-H parts will be shot blasted
Blasting condition
- Surface preparation grade: ISO 8501-1, 2007 Sa2.5
- Density: Avg. 95%
- Roughness: 40 – 60u (No greater than 80 microns)

B. Hot spray Zinc metalizing

1) Application standard: BS EN ISO 2063 Metallic and other inorganic coating Thermal spraying-Zinc, aluminum and their alloys.

2) 40-60 microns to exposed Corten parts and welding seam line on the frame to panel area.

6.3.2.3 Main frame station

6.3.2.3.1 SPA-H parts:

A. Shot blasting

Prior to hot spray Zinc metalizing, SPA-H parts will be shot blasted
Blasting condition
- Surface preparation grade: ISO 8501-1, 2007 Sa2.5
- Density: Avg. 95%
- Roughness: 40 - 60u (No greater than 80 microns)

B. Hot spray Zinc metalizing

1) Application standard: BS EN ISO 2063 Metallic and other inorganic coating Thermal spraying-Zinc, aluminum and their alloys.
2) 40-60 microns to no metallized exposed Corten parts and welding seam line on the frame to panel area.

C. Primer coating

1) 30 microns zinc rich primer to no zinc metalizing area
2) 50 microns zinc phosphate epoxy primer to top and bottom side rail, cross member, tunnel bolster, and gooseneck tunnel.

D. Top coating

60 microns to end frame, top and bottom side rail, cross member, tunnel bolster, and gooseneck tunnel.

Reviewed for Code Compliance
Inspections Division
Approved with Conditions
Date: 02/22/18

6.3.2.3.2 MGSS/HGSS parts:

A. Shot blasting

All exhibit MGSS/HGSS parts will be sweep blasted.

Blasting condition

- Surface preparation grade: Uniformly affected
- Density: 30-40 %
- Roughness profile: 25 - 40u

B. Primer coating

50 microns to door, side, base and roof panel outside.

C. Top coating

60 microns to door, side, base and roof panel outside.

6.3.3 Final painting touch-up

Touch-up coating for damaged parts or low DFT area (minor repair).

All the unnecessary touch-up coating shall be avoided.

Reviewed for Code Compliance
Inspections Division
Approved with Conditions
Date: 02/22/18

7. WARRANTY

7.1 Paint Warranty

The paint system applied on the container surface is guaranteed against corrosion and/or paint failure for a period of five (5) years.

The warranty is applied to all kinds of faults or failures affection more than 10% based on European standard “RE3 of the painted surface and partial or total repainting is assured for the container(s) at manufacturer's expense.

Normal wear/tear or corrosion caused by acid, alkaline solution or result from damages by abrasion, impact or accident are excluded.

7.2 Decal Warranty

All decals will be applied with seven (7) years guarantee against failure including peeling, cracking, discoloration, curling and shrinking by the manufacturer.

7.3 Other Warranty

All containers are guaranteed by the manufacturer, MCIQ against any defects or omissions in construction, poor workmanship, defective materials for a period on two (2) years.

Any damages caused by mis-handling, mis-securing, mis-loading, impact and other natures of accident are excluded.

Reviewed for Code Compliance
Inspections Division
Approved with Conditions
Date: 02/22/18

8. REVISION ITEM LIST

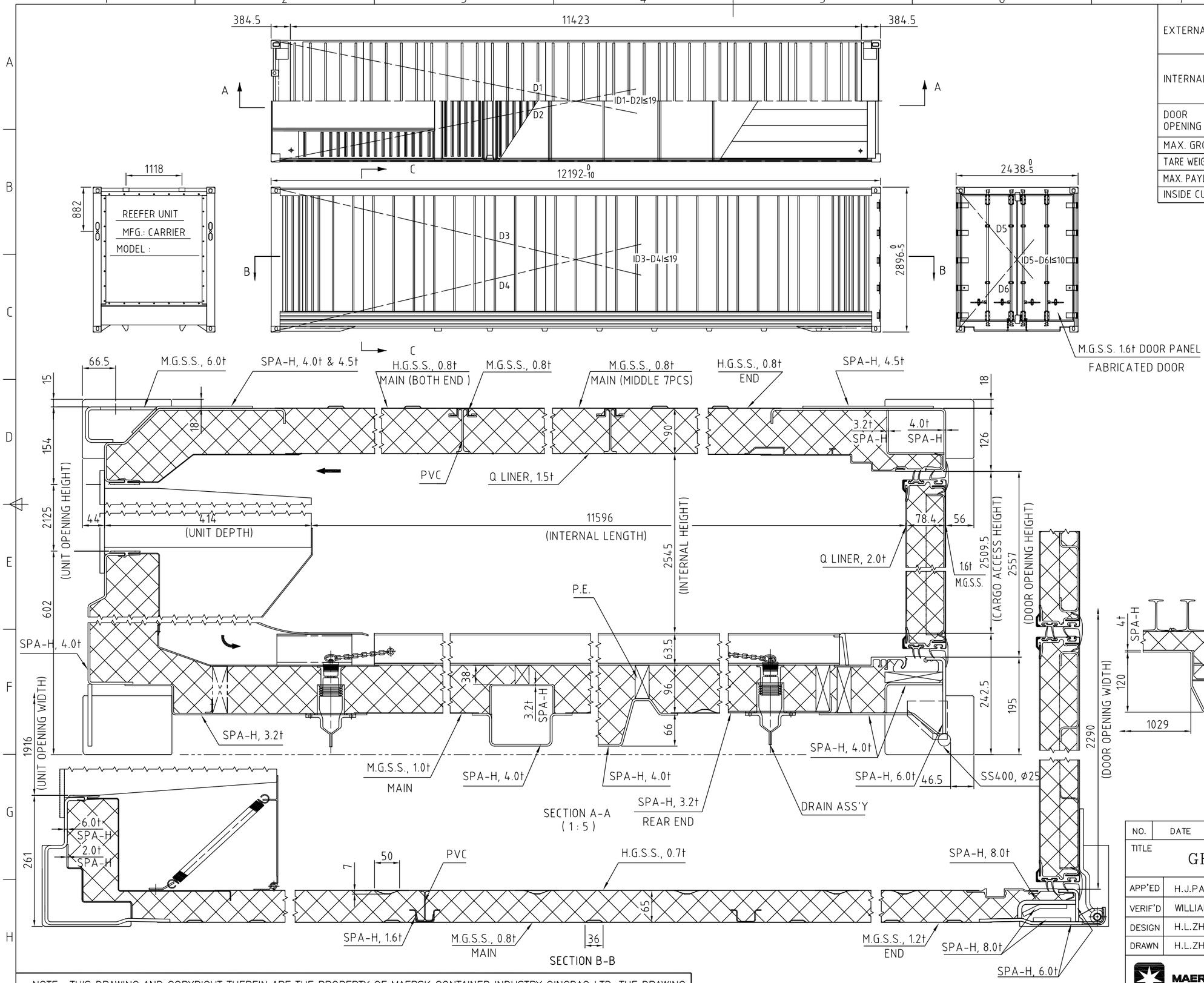

EXTERNAL	LENGTH			'	+0 -3/8"
	WIDTH			'	+0 -3/16"
	HEIGHT			'	+0 -3/16"
INTERNAL	LENGTH			1/16"	+0 -3/8"
	WIDTH	2,290 +0 -10	MM	7' - 6 3/16"	+0 -3/8"
	HEIGHT	2,545 +5 -10	MM	8' - 4 3/16"	+3/16" -3/8"
DOOR OPENING	WIDTH	2,290 +0 -5	MM	7' - 6 3/16"	+0 -3/16"
	HEIGHT	2,557 +0 -5	MM	8' - 4 11/16"	+0 -3/16"
MAX. GROSS WEIGHT		34,000	KG.	74,960	LB.
TARE WEIGHT (INCLUDING UNIT)		4,470	KG.	9,860	LB.
MAX. PAYLOAD		29,530	KG.	65,100	LB.
INSIDE CUBIC CAPACITY		67.5	CU.M	2,384	CU.FT

CITY OF PORTLAND, MAINE — RESURGAM

Reviewed for Code Compliance
Inspections Division
Approved with Conditions
Date: 02/22/18

NO.	DATE	REVISION RECORD	BY	VERIF'D

TITLE

GENERAL ARRANGEMENT

APP'ED	H.J.PARK	CUSTOMER NAME		EIMSKIP	
VERIF'D	WILLIAM.ZHOU	CONT. SIZE	40' H/C	DATE	2016-05-10
DESIGN	H.L.ZHANG	SCALE	1:50	PRO-JECTION	
DRAWN	H.L.ZHANG	DRWG NO.	MQRS-40HS-143A-GA(CR)		

MAERSK CONTAINER INDUSTRY QINGDAO LTD.

NOTE : THIS DRAWING AND COPYRIGHT THEREIN ARE THE PROPERTY OF MAERSK CONTAINER INDUSTRY QINGDAO LTD. THE DRAWING MUST NOT BE USED, COPIED OR EXHIBITED WITHOUT THE WRITTEN PERMISSION OF MAERSK CONTAINER INDUSTRY QINGDAO LTD.

NO.	DATE	REVISION REC	VERIF'D

CITY OF PORTLAND, MAINE — RESURGAM

Reviewed for Code Compliance
Inspections Division
Approved with Conditions
Date: 02/22/18

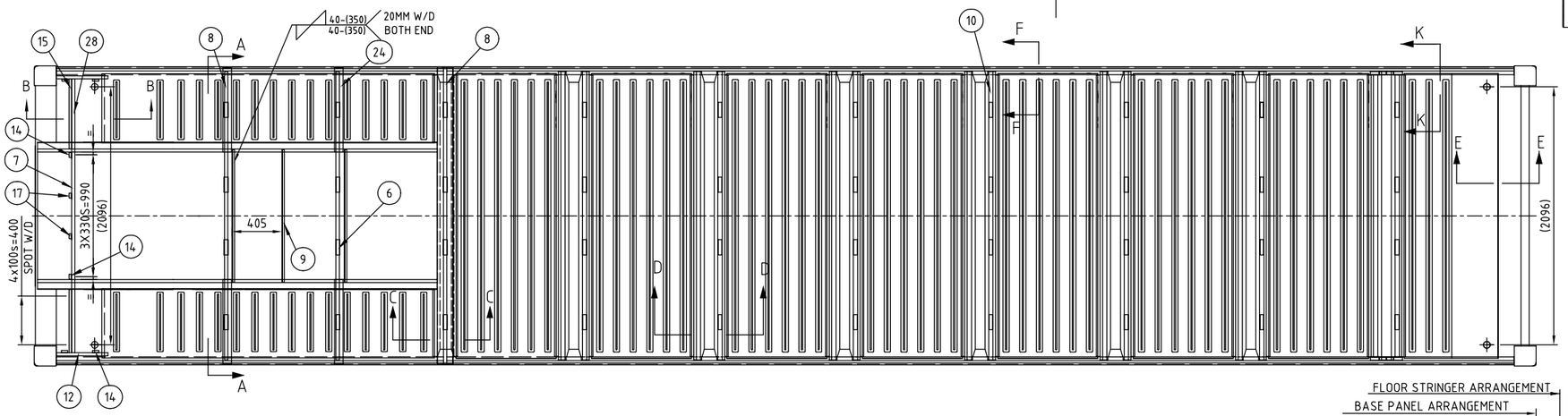

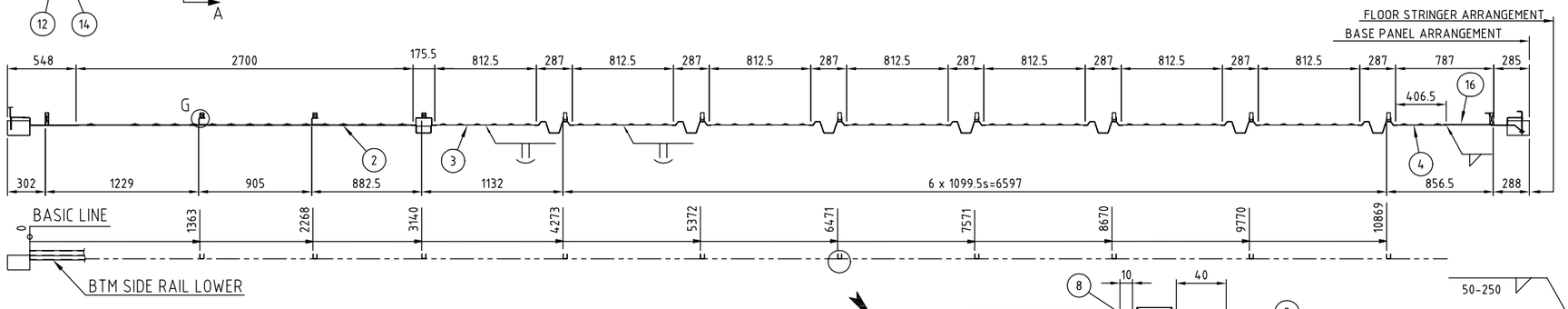

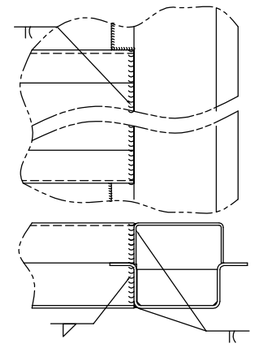

DETAIL OF JOINTED G-TUNNEL WITH BOLSTER

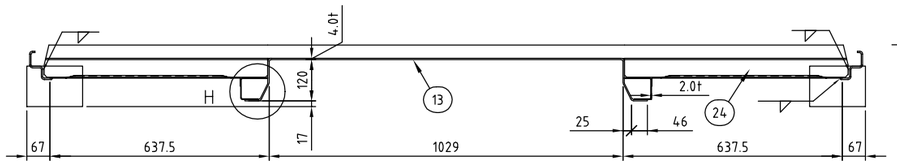

SECTION A-A

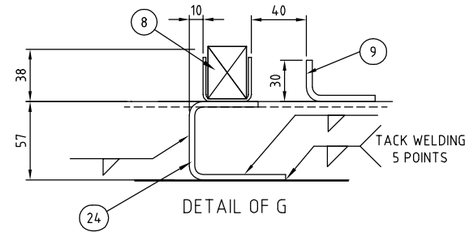

DETAIL OF G

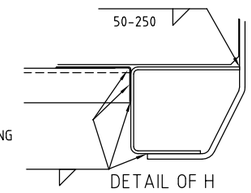

DETAIL OF H

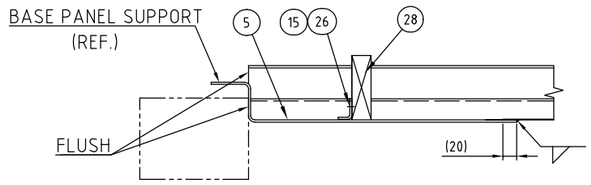

SECTION B-B

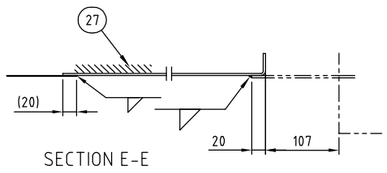

SECTION E-E

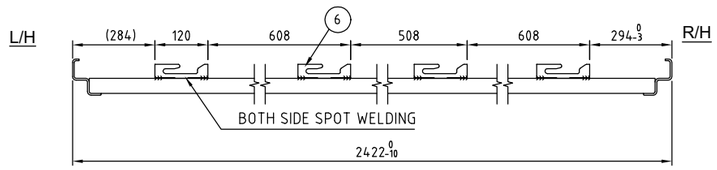

DETAIL OF BASE PANEL BRACKET WELDING WITH CROSSMEMBER

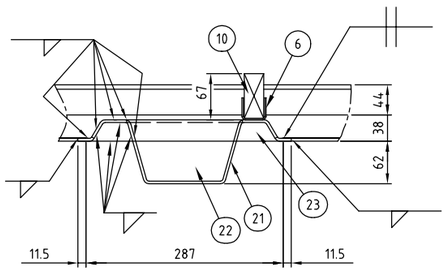

SECTION D-D

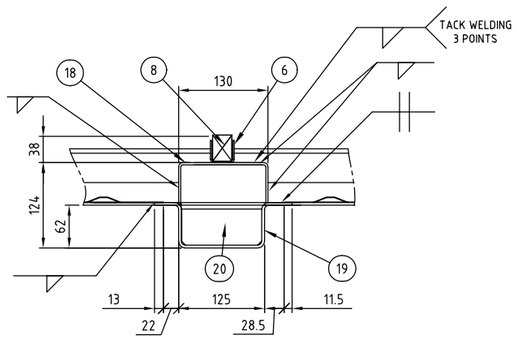

SECTION C-C

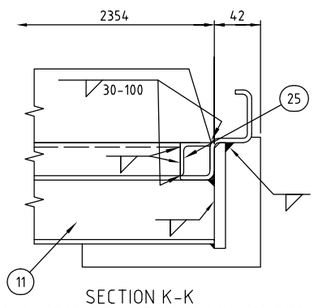

SECTION K-K
(ONLY FOR REAR END CROSSMEMBER)

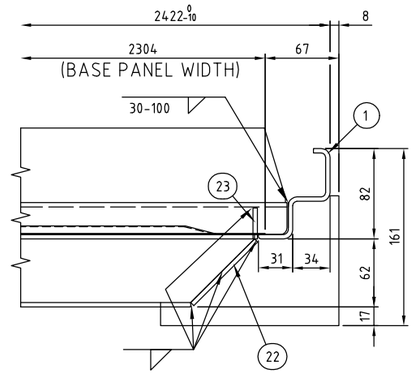

SECTION F-F

Item	PART NO.	Qty	Description
28		2	FLOOR STRINGER, OUTRIGGER
27		A/R	FOAM ADHESIVE
26		26	DRIVE SCREW
25		2	CROSS MEMBER B PATCH
24		4	CROSSMEMBER, OUTRIGGER
23		24	CROSS MEMBER END B
22		12	CROSS MEMBER END A
21		6	CROSS MEMBER A
20		2	BOLSTER END PLATE
19		1	BOLSTER LOWER
18		1	BOLSTER UPPER
17		2	SEAL VENEER SUPPORT
16		1	BASE PANEL REAR END (SPA-H)
15		2	FLOOR STRINGER BRACKET C
14		6	FLOOR STRINGER BRACKET B
13		1	GOOSENECK TUNNEL ASS'Y
12		2	FLOOR STRINGER, PAN FRONT
11		1	CROSS MEMBER B
10		7	FLOOR STRINGER, CROSS MEMBER
9		3	FLOOR STRINGER BRACKET D
8		3	FLOOR STRINGER, BOLSTER
7		1	FLOOR STRINGER,G/N
6		40	BASE PANEL BRACKET
5		2	BASE PANEL SUPPORT (SPA-H)
4		1	BASE PANEL, REAR MAIN (M.G.S.S. 1.0t)
3		7	BASE PANEL, MAIN (M.G.S.S. 1.0t)
2		2	BASE PANEL, OUTRIGGER (M.G.S.S., 1.0t)
1		2	BOTTOM SIDE RAIL

TITLE

BASE ASSEMBLY

APP'ED	H.J.PARK	CUSTOMER NAME			
VERIF'D	WILLIAM.ZHOU	CONT. SIZE	40' hc	DATE	2015-10-06
DESIGN	H.L.ZHANG	SCALE	1:30	PRO-JECTION	
DRAWN	H.L.ZHANG	DRWG NO.	MQRS-40BA-30AA		

MAERSK CONTAINER INDUSTRY QINGDAO LTD.

NOTE : THIS DRAWING AND COPYRIGHT THEREIN ARE THE PROPERTY OF MAERSK CONTAINER INDUSTRY QINGDAO LTD. THE DRAWING MUST NOT BE USED, COPIED OR EXHIBITED WITHOUT THE WRITTEN PERMISSION OF MAERSK CONTAINER INDUSTRY QINGDAO LTD.

NO.	DATE	REVISION REC	VERIF'D

Reviewed for Code Compliance
Inspections Division
Approved with Conditions
Date: 02/22/18

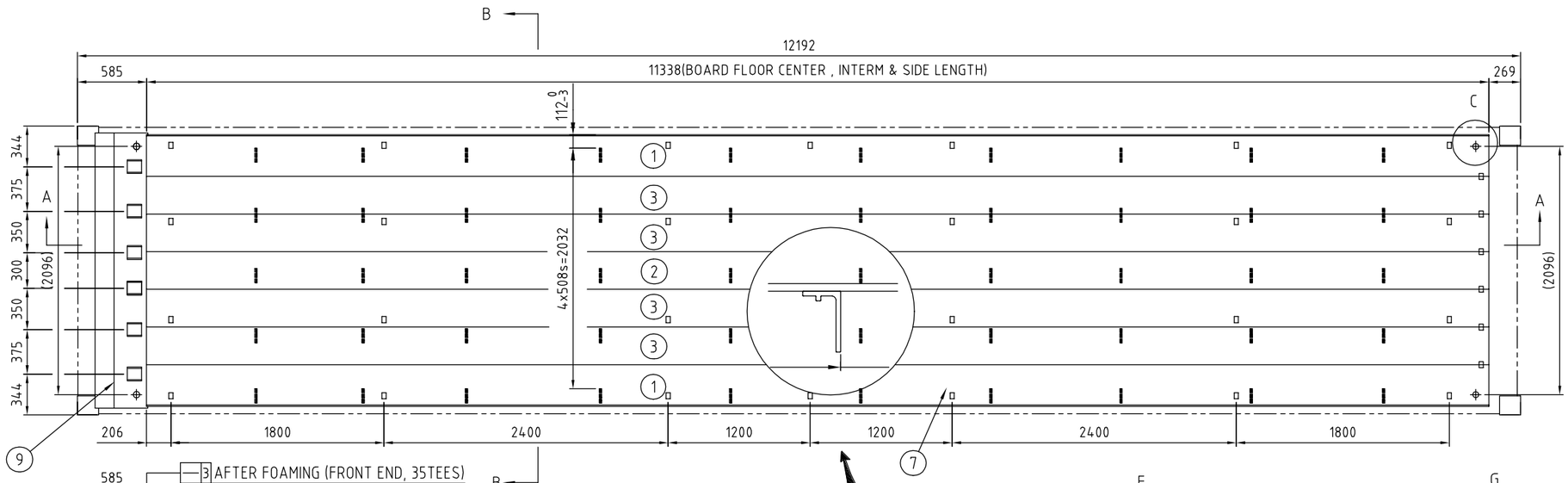

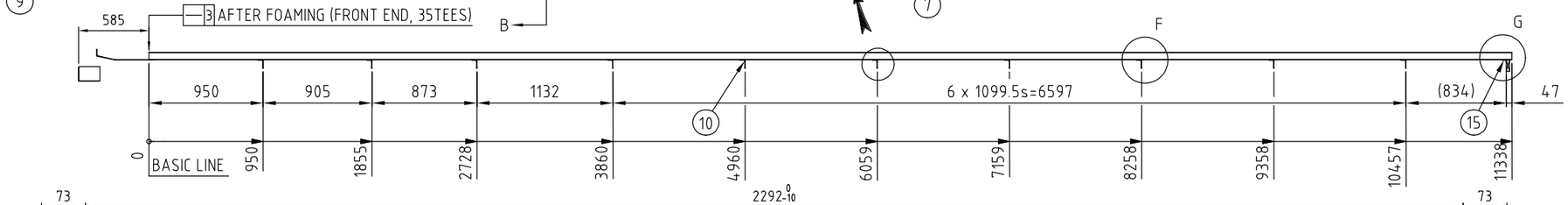

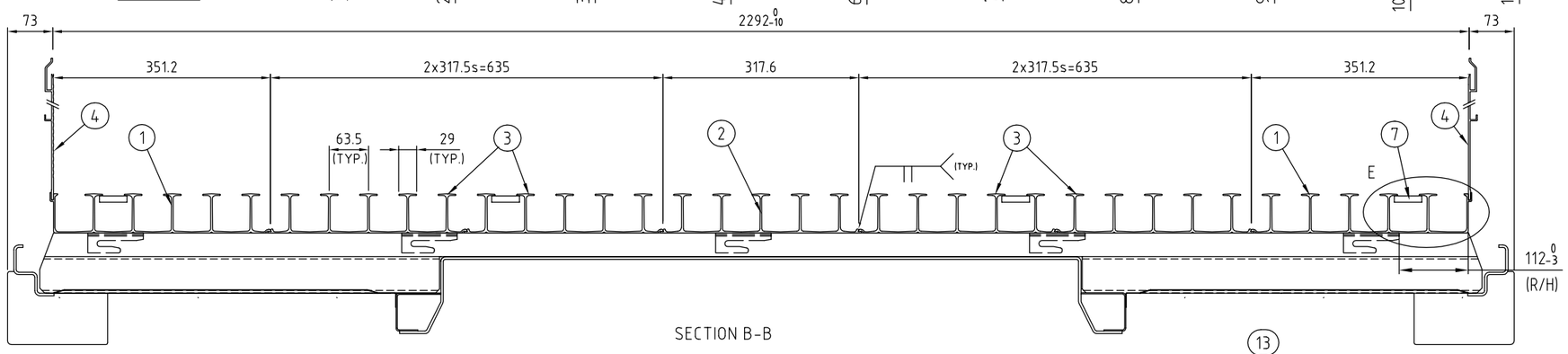

SECTION B-B

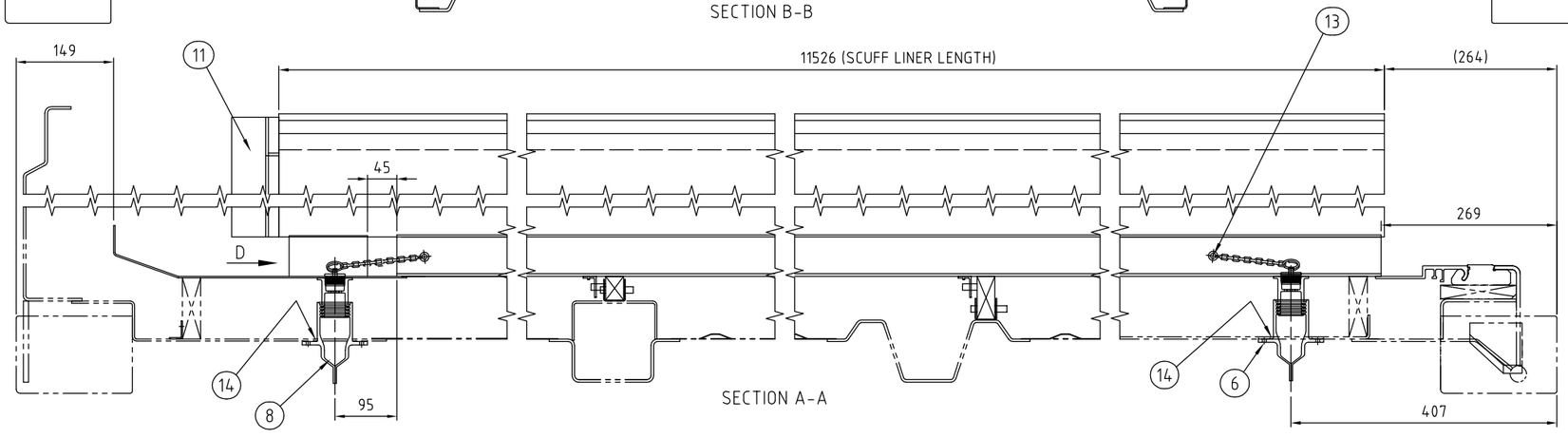

SECTION A-A

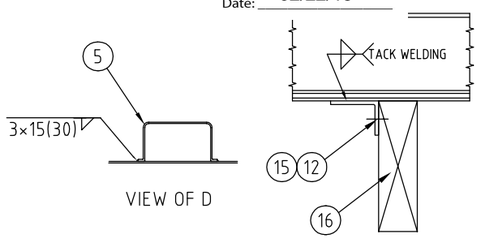

VIEW OF D

DETAIL OF G

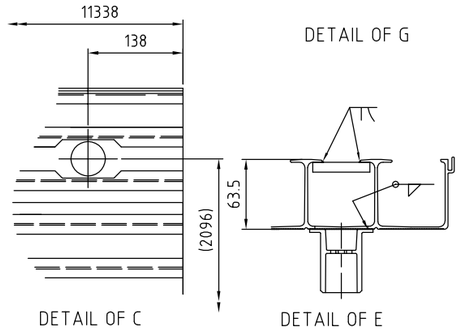

DETAIL OF C

DETAIL OF E

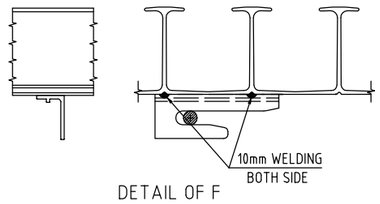

DETAIL OF F

Item	PART NO.	Qty	Description
16		1	FLOOR STRINGER, REAR END
15		6	BOARD FLOOR BRACKET B
14		A/R	BUTYL SEALANT, BLACK
13		4	DRIVE RIVET(3/16"DIA.,5161-0627)
12		31	DRIVE SCREW
11		2	SCUFF LINER, FRONT END
10		50	BOARD FLOOR BRACKET A
9		1	PAN FRONT ASS'Y
8		4	DRAIN ASS'Y
7		26	LASHING BAR
6		24	LARGE HEAD BLIND RIVET (SUS.,3/16"DIA. 16MM GRIP)
5		6	BAFFLE SUPPORT CHANNEL
4		2	SCUFF LINER
3		4	BOARD FLOOR, INTERMEDIATE
2		1	BOARD FLOOR, CENTER
1		2	BOARD FLOOR, SIDE

TITLE

FLOOR ASSEMBLY

APP'ED	H.J.PARK	CUSTOMER NAME			
VERIF'D	WILLIAM.ZHOU	CONT. SIZE	40' HC	DATE	2016-04-09
DESIGN	H.L.ZHANG	SCALE	1:30	PRO-JECTION	
DRAWN	H.L.ZHANG	DRWG NO.	MQRS-40BF-74AA		

MAERSK CONTAINER INDUSTRY QINGDAO LTD.

NOTE : THIS DRAWING AND COPYRIGHT THEREIN ARE THE PROPERTY OF MAERSK CONTAINER INDUSTRY QINGDAO LTD. THE DRAWING MUST NOT BE USED, COPIED OR EXHIBITED WITHOUT THE WRITTEN PERMISSION OF MAERSK CONTAINER INDUSTRY QINGDAO LTD.

NO.	DATE	REVISION REC			VERIF'D
H	2015-04-21	CHANGED WELDING METHOD	H.L.ZHANG	WILLIAM	
J	2015-05-13	CHANGED DIMENSION	Z.YU	WILLIAM	
F	2014-10-15	CHANGED DIMENSION			WILLIAM
G	2014-11-19	CHANGED GENERATOR SET NU			WILLIAM

CITY OF PORTLAND, MAINE — RESURGAM

Reviewed for Code Compliance
Inspections Division
Approved with Conditions
Date: 02/22/18

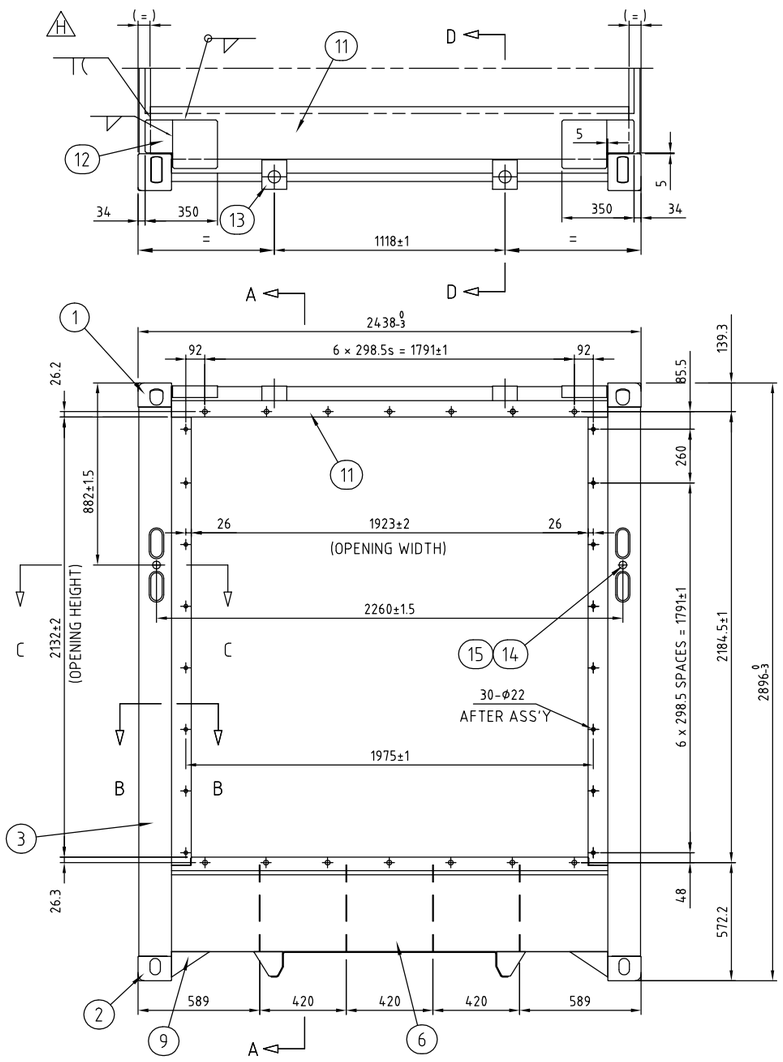

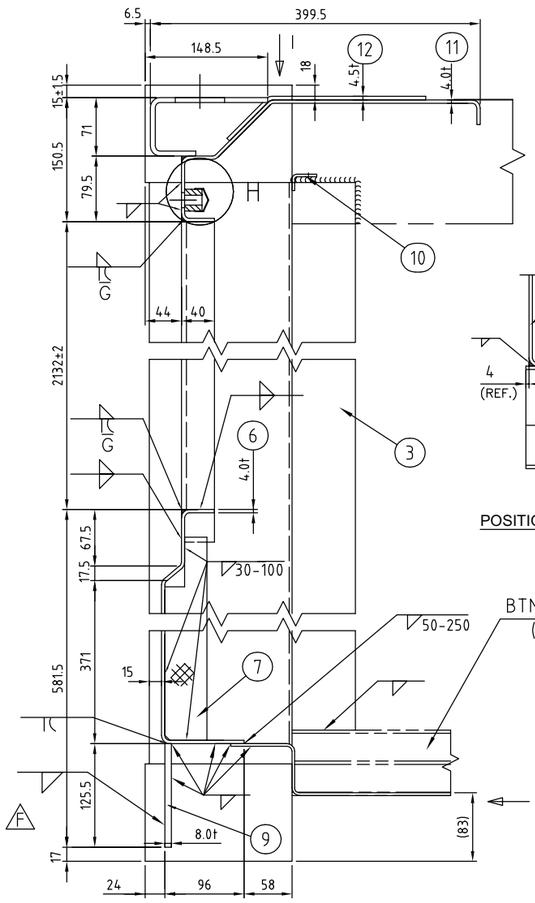

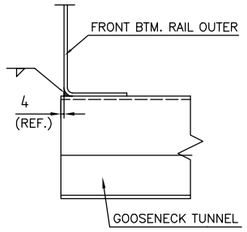

POSITION OF GOOSENECK TUNNEL

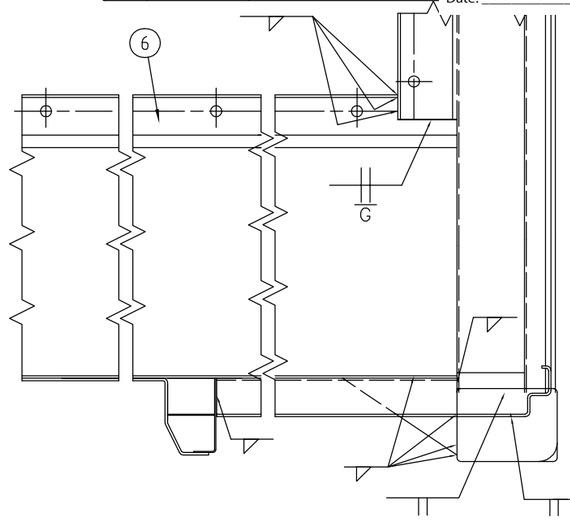

VIEW OF E

NOTE:
- MAX ALLOWABLE DIFFERENCE BETWEEN TWO DIAGONALS IS 6MM

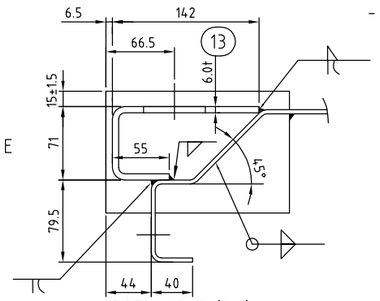

SECTION D-D (1:4)

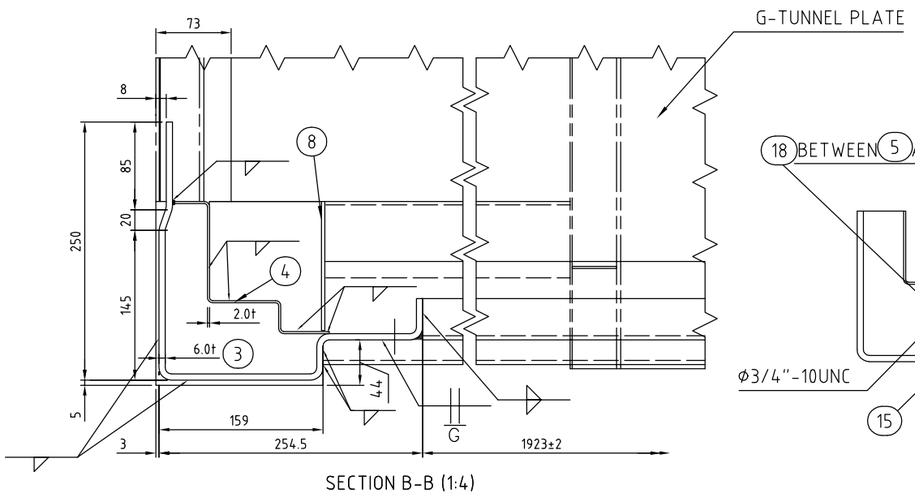

SECTION B-B (1:4)

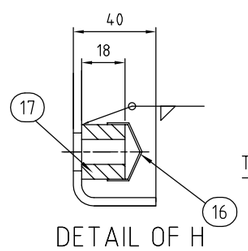

DETAIL OF H
(1:10)

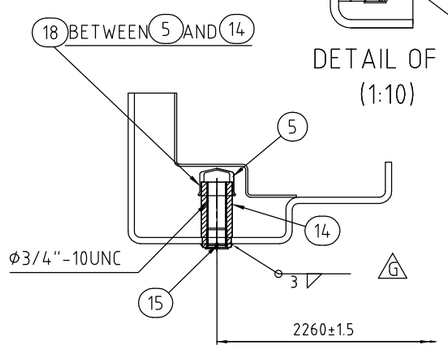

SECTION C-C (1:4)

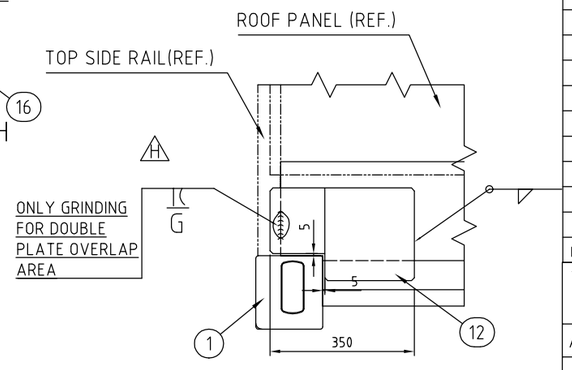

VIEW OF I

Item	PART NO.	Qty	Description
18		A/R	BUTYL SEALANT
17		30	BOX NUT (CARBON STEEL)
16		30	E.P.D.M. CAP
15		2	PLASTIC PLUG
14		2	GENERATOR SET NUT (3/4"DIA-10UNC. SUS)
13		2	GENERATOR SET MOUNT BRACKET (M.G.S.S.)
12		2	FRONT DOUBLER PLATE (SPA-H)
11		1	FRONT TOP RAIL (SPA-H)
10		2	SEAL VEENER SUPPORT ANGLE
9		2	BOTTOM CORNER GUSSET (SPA-H)
8		2	FRONT BOTTOM FILLER (SPA-H)
7		4	FRONT BOTTOM RAIL GUSSET (SPA-H)
6		1	FRONT BOTTOM RAIL OUTER (SPA-H)
5		2	CAP (EPDM)
4		2	CORNER POST INNER (SPA-H)
3		2	CORNER POST OUTER (SPA-H)
2		2	CORNER CASTING LOWER (SCW480)
1		2	CORNER CASTING UPPER (SCW480)

TITLE

FRONT FRAME ASSEMBLY

APP'ED	H.J.PARK	CUSTOMER NAME			
VERIF'D	WILLIAM.ZHOU	CONT. SIZE	40' H/C	DATE	2010-11-03
DESIGN	X.D.KONG	SCALE	1:20	PRO-JECTION	
DRAWN	X.D.KONG	DRWG NO.	MQRS-40FF-01AJ		

MAERSK CONTAINER INDUSTRY QINGDAO LTD.

NOTE : THIS DRAWING AND COPYRIGHT THEREIN ARE THE PROPERTY OF MAERSK CONTAINER INDUSTRY QINGDAO LTD. THE DRAWING MUST NOT BE USED, COPIED OR EXHIBITED WITHOUT THE WRITTEN PERMISSION OF MAERSK CONTAINER INDUSTRY QINGDAO LTD.

NO.	DATE	REVISION REC	VERIF'D

Reviewed for Code Compliance
Inspections Division
Approved with Conditions
Date: 02/22/18

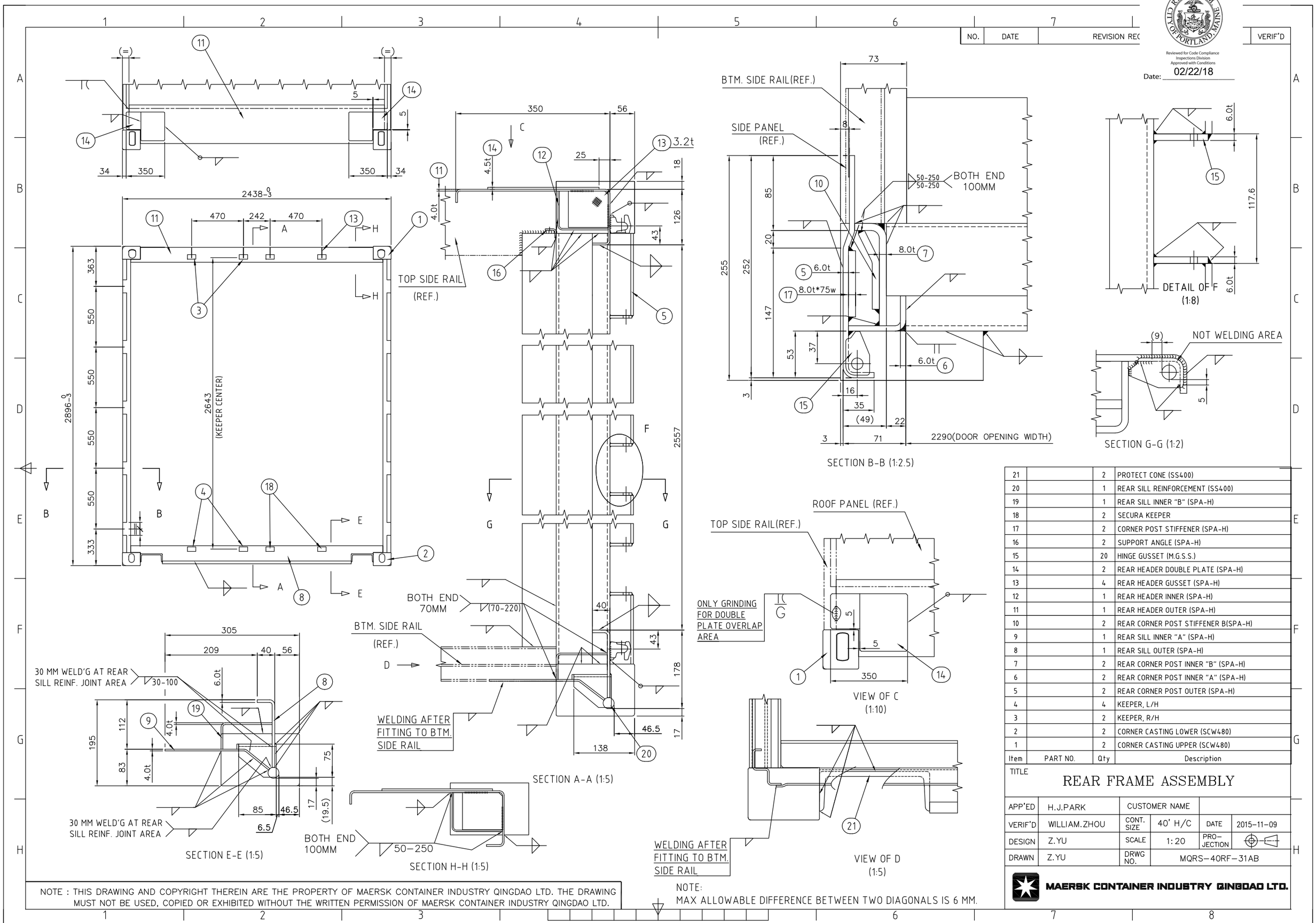

Item	PART NO.	Qty	Description
21		2	PROTECT CONE (SS400)
20		1	REAR SILL REINFORCEMENT (SS400)
19		1	REAR SILL INNER "B" (SPA-H)
18		2	SECURA KEEPER
17		2	CORNER POST STIFFENER (SPA-H)
16		2	SUPPORT ANGLE (SPA-H)
15		20	HINGE GUSSET (M.G.S.S.)
14		2	REAR HEADER DOUBLE PLATE (SPA-H)
13		4	REAR HEADER GUSSET (SPA-H)
12		1	REAR HEADER INNER (SPA-H)
11		1	REAR HEADER OUTER (SPA-H)
10		2	REAR CORNER POST STIFFENER B(SPA-H)
9		1	REAR SILL INNER "A" (SPA-H)
8		1	REAR SILL OUTER (SPA-H)
7		2	REAR CORNER POST INNER "B" (SPA-H)
6		2	REAR CORNER POST INNER "A" (SPA-H)
5		2	REAR CORNER POST OUTER (SPA-H)
4		4	KEEPER, L/H
3		2	KEEPER, R/H
2		2	CORNER CASTING LOWER (SCW480)
1		2	CORNER CASTING UPPER (SCW480)

TITLE

REAR FRAME ASSEMBLY

APP'ED	H.J.PARK	CUSTOMER NAME			
VERIF'D	WILLIAM.ZHOU	CONT. SIZE	40' H/C	DATE	2015-11-09
DESIGN	Z.YU	SCALE	1:20	PRO-JECTION	
DRAWN	Z.YU	DRWG NO.	MQRS-40RF-31AB		

MAERSK CONTAINER INDUSTRY QINGDAO LTD.

NOTE: MAX ALLOWABLE DIFFERENCE BETWEEN TWO DIAGONALS IS 6 MM.

NOTE : THIS DRAWING AND COPYRIGHT THEREIN ARE THE PROPERTY OF MAERSK CONTAINER INDUSTRY QINGDAO LTD. THE DRAWING MUST NOT BE USED, COPIED OR EXHIBITED WITHOUT THE WRITTEN PERMISSION OF MAERSK CONTAINER INDUSTRY QINGDAO LTD.

NO.	DATE	REVISION REC	VERIF'D

Reviewed for Code Compliance
Inspections Division
Approved with Conditions
Date: 02/22/18

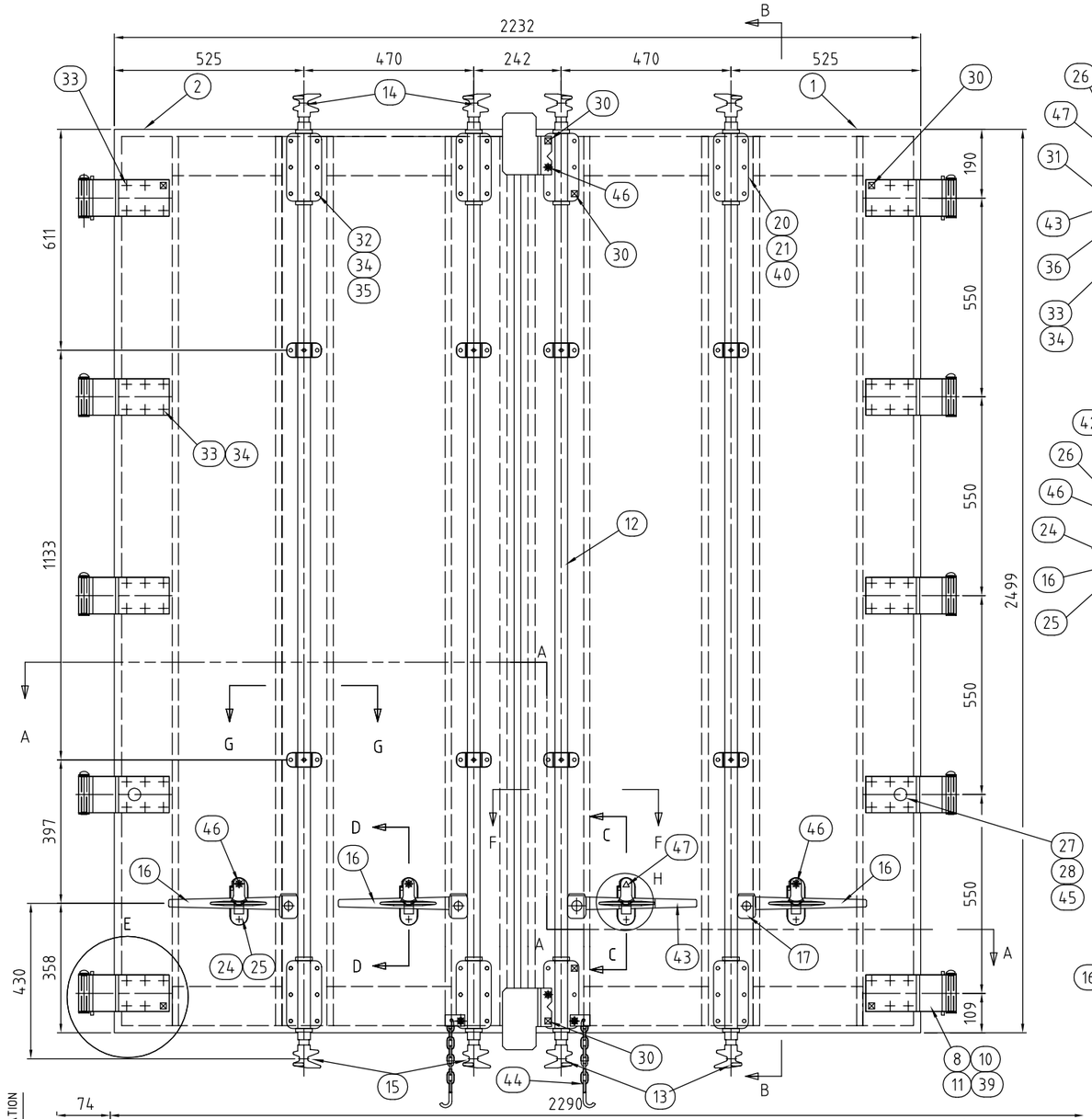

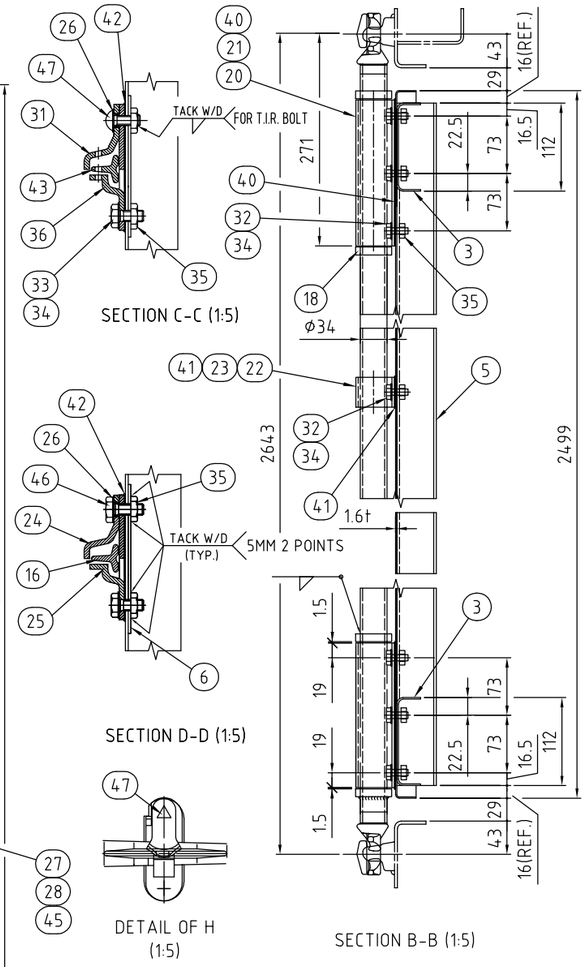

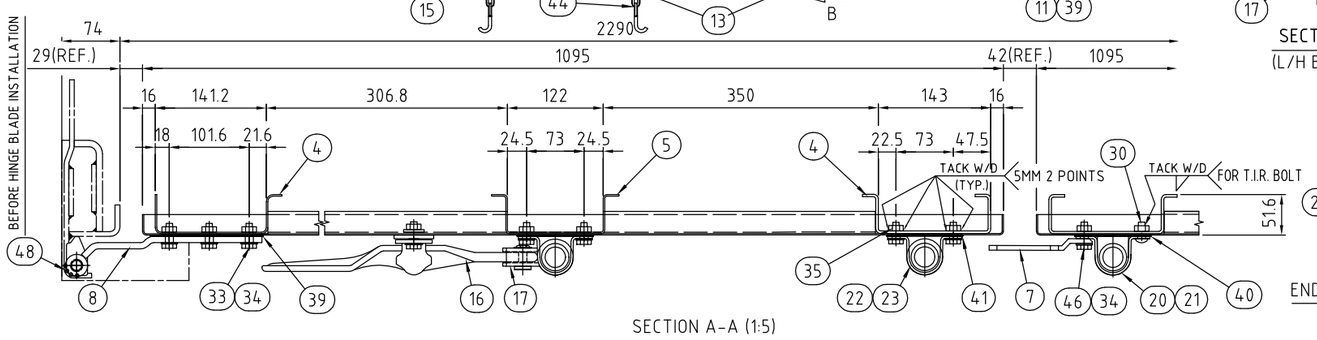

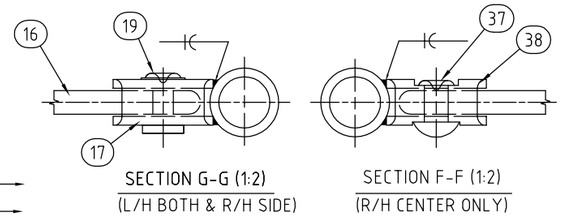

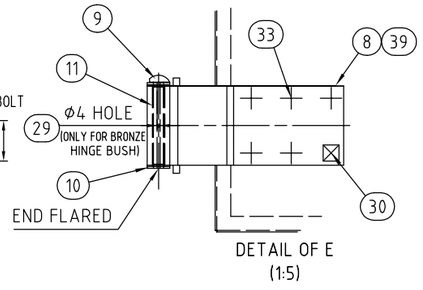

Item	PART NO.	Qty	Description	
48		A/R	MS OR URETHANE SEALANT,WHITE	
47		1	TIR BOLT (H.D.G. STEEL, M10 x 29LG.)	△
46		7	HEX BOLT (H.D.G. STEEL,M10×29)	✱
45		A/R	MS OR URETHANE SEALANT, GREY	
44		2	TIE HOLDER (SS400+FILM)	
43		1	HANDLE-2 (WITH HOLE)	
42		4	GASKET, RETAINER PLATE	
41		8	GASKET, SMALL BRACKET	
40		8	GASKET, LARGE BRACKET	
39		10	GASKET, HINGE BLADE	
38		1	HANDLE HUB-2	
37		1	BOLT	
36		1	HANDEL RETAINER PLATE(WITH HOLE)	
35		132	HEX NUT (CARBON STEEL,M10)	
34		120	PLANE WASHER (1.6t)	
33		60	HEX BOLT (H.D.G. STEEL,M10×26)	+
32		56	HEX BOLT (H.D.G. STEEL,M10×22)	○
31		1	HANDLE RETAINER CATCH (WITH HOLE)	
30		8	TIR BOLT (H.D.G. STEEL, M10 x 26LG.)	⊠
29		A/R	GREASE	
28		2	TAPPING SCREW (M8 × 20LG.)	
27		2	DOOR BUMPER (RUBBER)	
26		4	HANDLE RETAINER BUSH	
25		3	HANDLE RETAINER PLATE(WITHOUT HOLES)	
24		3	HANDLE RETAINER CATCH (WITHOUT HOLE)	
23		8	SMALL SPLIT BUSH	
22		8	SMALL BRACKET OUTER	
21		8	LARGE SPLIT BUSH	
20		8	LARGE BRACKET OUTER	
19		3	RIVET, 3/8"DIA. × 1 1/8"LG	
18		16	ANTI RACK RING	
17		3	HANDLE HUB-1	
16		3	HANDLE-3 (WITHOUT HOLE)	
15		4	CAM L.H.	
14		2	CAM R.H.	
13		2	SECURA CAM	
12		4	LOCKING ROD ASS'Y	
11		10	HINGE BUSH	
10		20	HINGE WASHER (SUS304)	
9		10	HINGE PIN (SUS304)	
8		10	HINGE BLADE (SS400)	
7		2	T.I.R. SLAM PLATE (SS490, GALV.)	
6		4	RETAINER BACK PLATE (SPA-H)	
5		2	PANEL REINFORCEMENT, V/T "C" (SPA-H)	
4		4	PANEL REINFORCEMENT, V/T "A" & "B" (SPA-H)	
3		8	PANEL REINFORCEMENT, H/Z "A" & "B" (SPA-H)	
2		1	DOOR PANEL, L/H (M.G.S.S.)	
1		1	DOOR PANEL, R/H (M.G.S.S.)	

TITLE

REAR DOOR ASSEMBLY

APP'ED	H.J.PARK	CUSTOMER NAME			
VERIF'D	WILLIAM.ZHOU	CONT. SIZE	40' H/C	DATE	2014-04-01
DESIGN	Z.YU	SCALE	1:10	PRO-JECTION	
DRAWN	Z.YU	DRWG NO.	MQRS-40DP-26AA		

MAERSK CONTAINER INDUSTRY QINGDAO LTD.

NOTE : THIS DRAWING AND COPYRIGHT THEREIN ARE THE PROPERTY OF MAERSK CONTAINER INDUSTRI QINGDAO LTD. THE DRAWING MUST NOT BE USED, COPIED OR EXHIBITED WITHOUT THE WRITTEN PERMISSION OF MAERSK CONTAINER INDUSTRI QINGDAO LTD.

NO.	DATE	REVISION REC		VERIF'D
B	2014-09-25	ADD BUTYL SEALANT,GREY	NG	WILLIAM
C	2015-03-06	CHANGED SEALANT APPLIED METHO		WILLIAM

CITY OF PORTLAND, MAINE — RESURGAM

Reviewed for Code Compliance
Inspections Division
Approved with Conditions
Date: 02/22/18

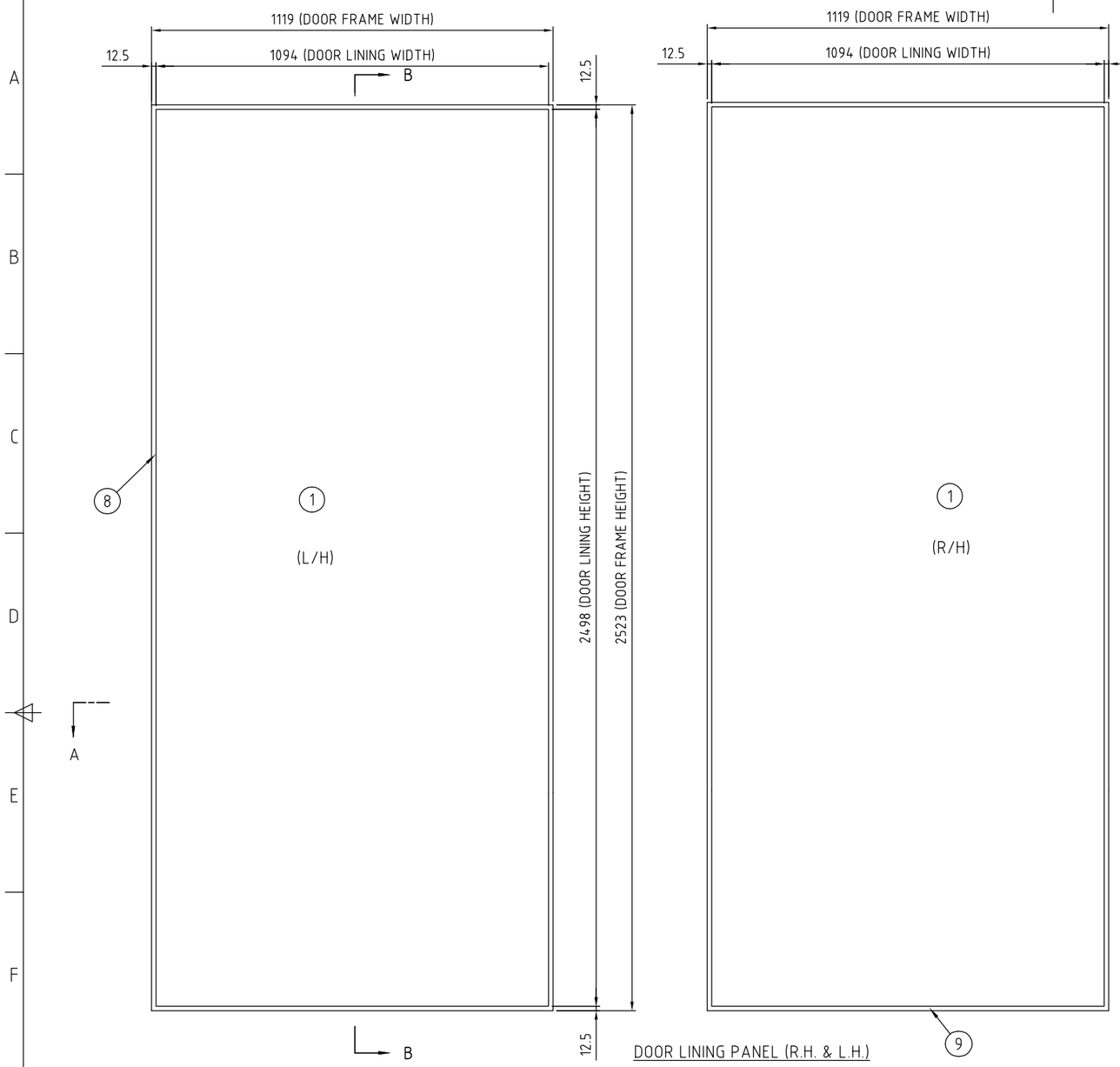

DOOR LINING PANEL (R.H. & L.H.)

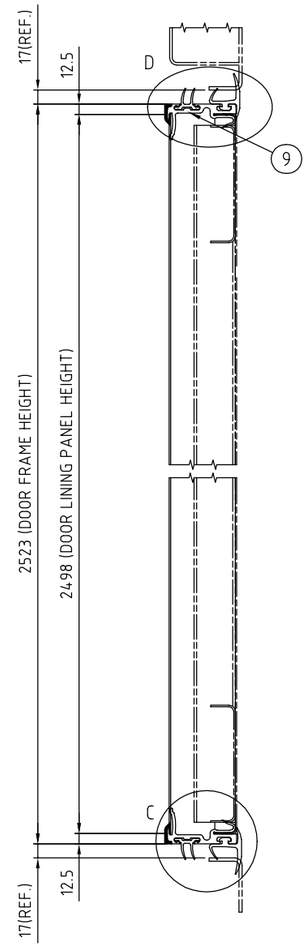

SECTION B-B (1:5)

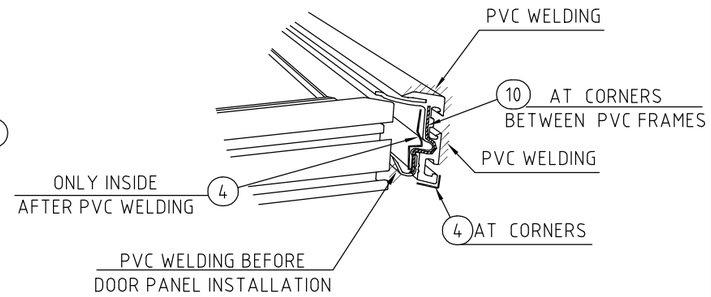

DETAIL OF DOOR FRAME CORNER

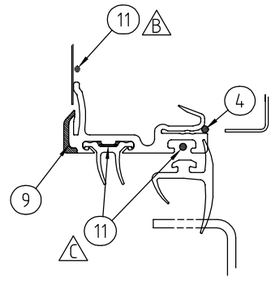

DETAIL OF C (1:2)
(ONLY BOTTOM)

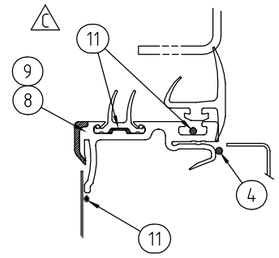

DETAIL OF D (1:2)
(TOP&VERTICAL)

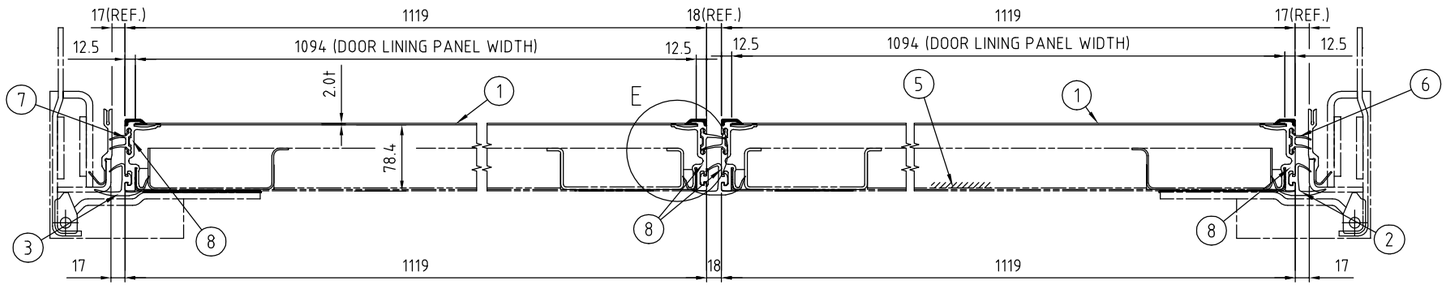

SECTION A-A (1:5)

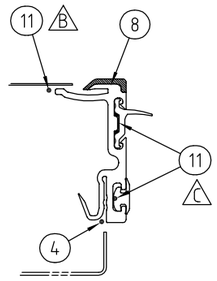

DETAIL OF E (1:2)
(ONLY LEFT CENTER)

Item	PART NO.	Qty	Description
11		A?R	BUTYL SEALANT
10		0.1 M	FOAM TAPE (3.0t × 76.2w)
9		4	DOOR FRAME, HORIZONTAL
8		4	DOOR FRAME, VERTICAL
7		1	THERMAL GASKET (L.H.)
6		1	THERMAL GASKET (R.H.)
5		A?R	FOAM ADHISIVE
4		A?R	MS or URETHANE SEALANT
3		1	RUBBER SEAL OUTER L.H. (E.P.D.M.)
2		1	RUBBER SEAL OUTER R.H. (E.P.D.M.)
1		2	DOOR LINING PANEL (Q LINER, 2.0t)

TITLE

DOOR LINING ASSEMBLY

APP'ED	H.J.PARK	CUSTOMER NAME			
VERIF'D	WILLIAM.ZHOU	CONT. SIZE	40'HC	DATE	2014-03-07
DESIGN	H.L.ZHANG	SCALE	1:10	PRO-JECTION	
DRAWN	H.L.ZHANG	DRWG NO.	MQRS-40DL-10AC		

MAERSK CONTAINER INDUSTRY QINGDAO LTD.

NOTE : THIS DRAWING AND COPYRIGHT THEREIN ARE THE PROPERTY OF MAERSK CONTAINER INDUSTRY QINGDAO LTD. THE DRAWING MUST NOT BE USED, COPIED OR EXHIBITED WITHOUT THE WRITTEN PERMISSION OF MAERSK CONTAINER INDUSTRY QINGDAO LTD.

NO.	DATE	REVISION REC			VERIF'D
F	2015-09-02	ADDED WELDING	Z.YU	WILLIAM	WILLIAM
G	2016-01-18	Cancel sealant at side foaming hole changed material of foam pulg B	Q.YANG	Y.SU	Y.SU
C	2015-02-10	EXTENDED SIDE POST LEN			
D	2015-08-07	CHANGED SIDE POST WELI			

CITY OF PORTLAND, MAINE — RESURGAM

Reviewed for Code Compliance
Inspections Division
Approved with Conditions
Date: 02/22/18

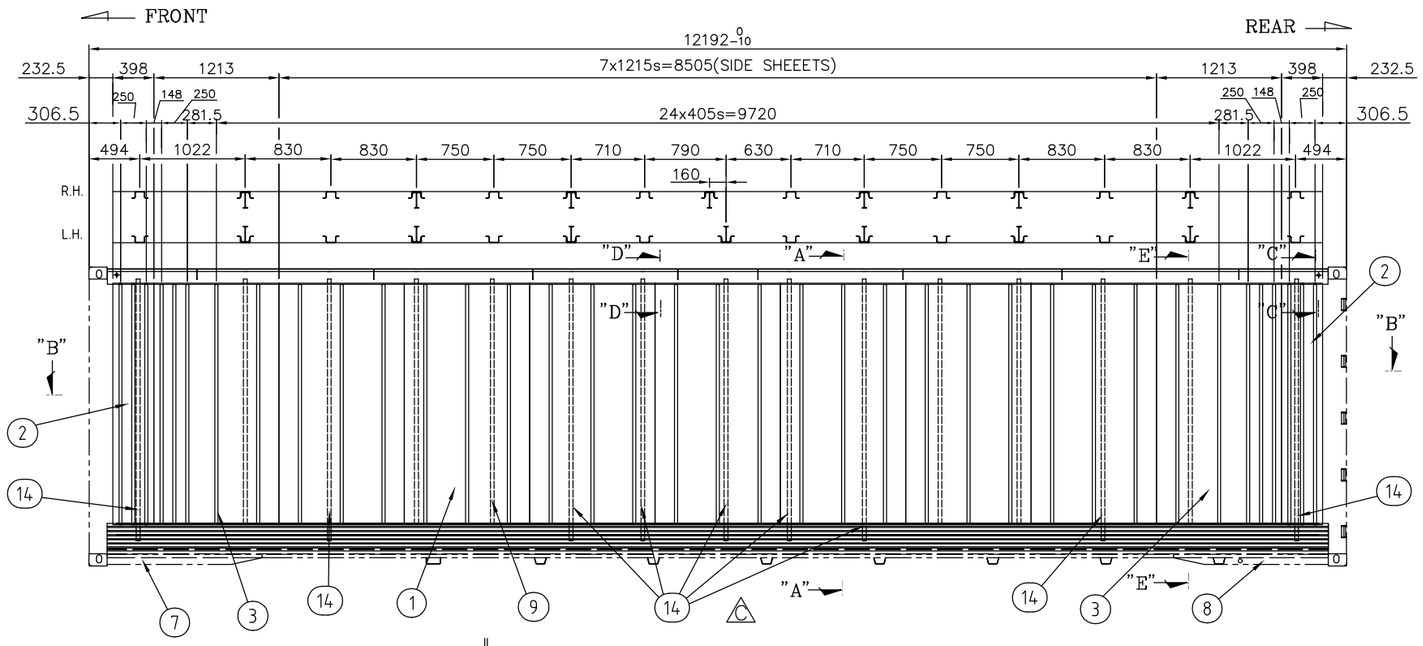

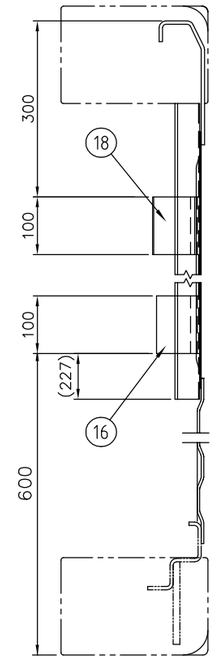

SECTION E-E

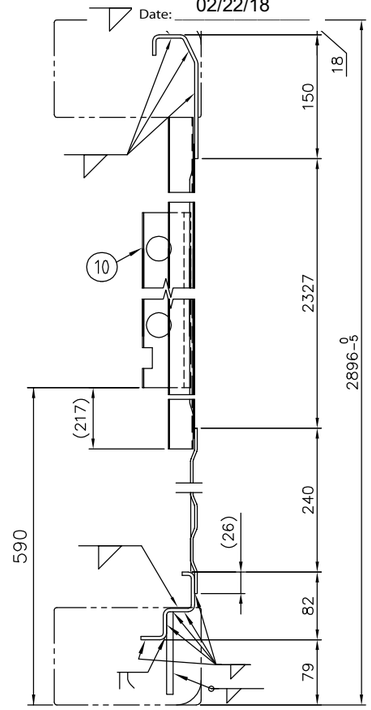

SECTION A-A

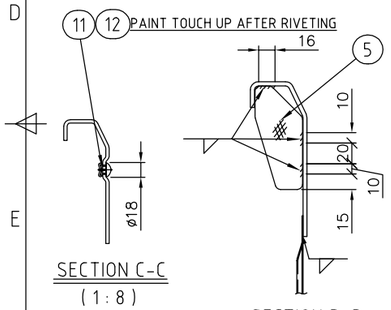

SECTION C-C
(1 : 8)

SECTION D-D
(1 : 10)

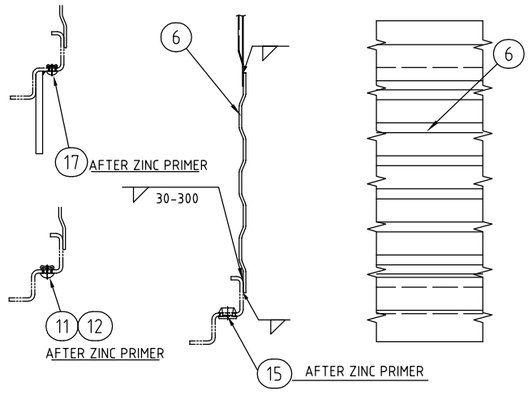

DETAIL OF BTM. SIDE RAIL
(1 : 8)

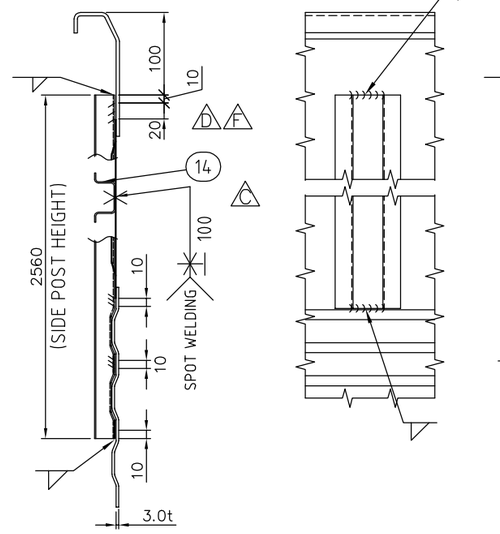

DETAIL OF SIDE PANEL POST W/D
(1 : 8)

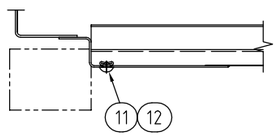

DETAIL OF BASE PANEL SUPPORT

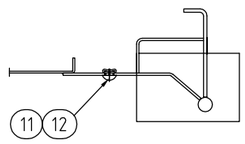

DETAIL OF REAR SILL INNER A
(ONLY FOR REAR SILL FOAMING)

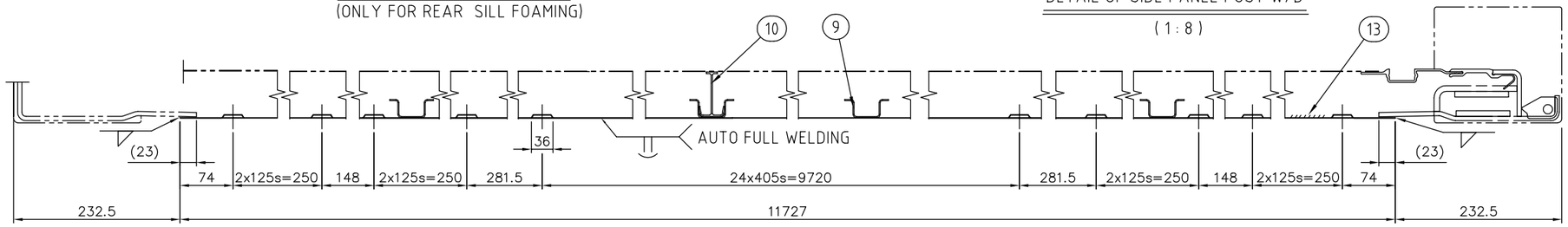

SECTION B-B
(1:8)

Item	PART NO.	Qty	Description
18		4	SIDE STRINGER SHORT A (PVC)
17		12	BLIND RIVET (SUS, 1/4" DIA.)
16		4	SIDE STRINGER SHORT B (PVC)
15		4	FOAM PLUG B
14		18	SIDE POST C (1.6t, SPA-H)
13		A/R	FOAM ADHESIVE
12		20	TLR. RIVET (BARK-08W04)
11		20	FOAM PLUG A
10		10	SIDE STRINGER (PVC)
9		12	SIDE POST D (1.6t, SPA-H)
8		2	SIDE PROTECTOR, REAR
7		2	SIDE PROTECTOR, FRONT
6		2	BOTTOM SIDE RAIL UPPER (3.0t, SPA-H)
5		16	TOP SIDE RAIL GUSSET
4		2	TOP SIDE RAIL (4.0t,SPA-H)
3		4	SIDE PANEL, INTERM. (0.8t, M.G.S.S.)
2		4	SIDE PANEL, END (1.2t, M.G.S.S.)
1		14	SIDE PANEL, MAIN (0.8t , M.G.S.S.)

TITLE

SIDE WALL ASSEMBLY

APP'ED	H.J.PARK	CUSTOMER NAME			
VERIF'D	WILLIAM.ZHOU	CONT. SIZE	40'HC	DATE	2011-02-14
DESIGN	Z.YU	SCALE	1:40	PRO-JECTION	
DRAWN	Z.YU	DRWG NO.	MQRS-40SP-36AG		

MAERSK CONTAINER INDUSTRY QINGDAO LTD.

NOTE : THIS DRAWING AND COPYRIGHT THEREIN ARE THE PROPERTY OF MAERSK CONTAINER INDUSTRY QINGDAO LTD. THE DRAWING MUST NOT BE USED, COPIED OR EXHIBITED WITHOUT THE WRITTEN PERMISSION OF MAERSK CONTAINER INDUSTRY QINGDAO LTD.

NO.	DATE	REVISION REC		VERIF'D
B	2012.09.24	CHANGED SCUFF LINER		WILLIAM
C	2014.01.20	CHANGED SEALING METHOD OF		WILLIAM
D	2014.10.14	CHANGED SCUFF LINER SECTION	Z.YU	WILLIAM

CITY OF PORTLAND, MAINE — RESURGAM

Reviewed for Code Compliance
Inspections Division
Approved with Conditions
Date: 02/22/18

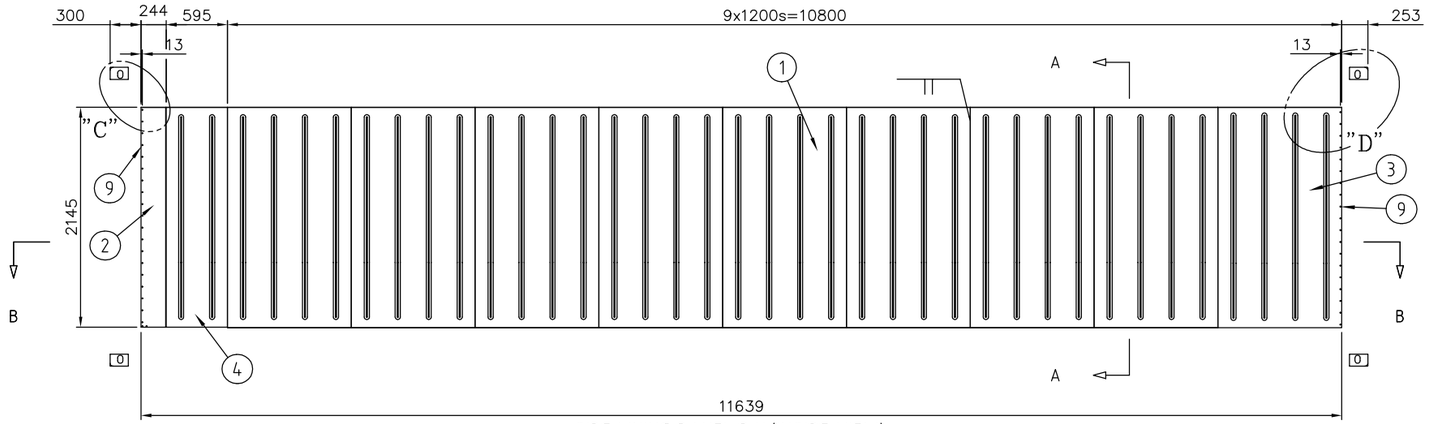

SIDE LINING PANEL R.H.(INSIDE VIEW)

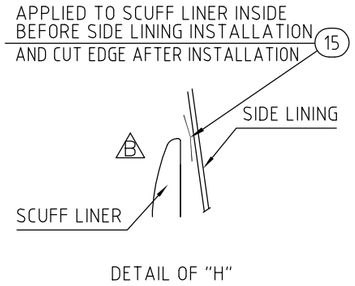

DETAIL OF "H"

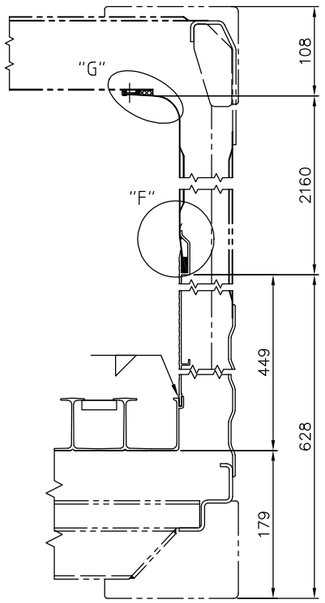

SECTION A-A

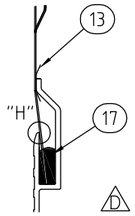

DETAIL OF "F"

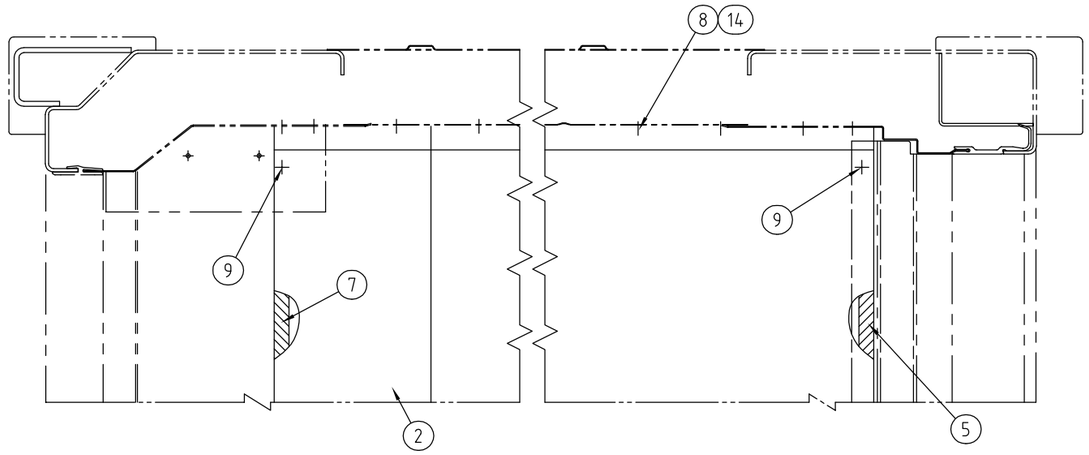

DETAIL OF "C"

DETAIL OF "D"

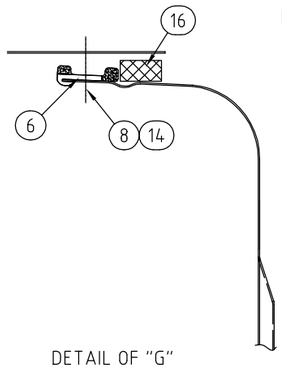

DETAIL OF "G"

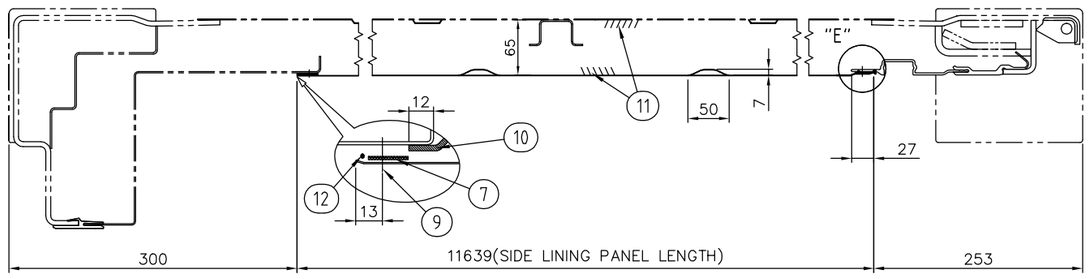

SECTION B-B

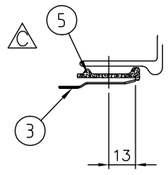

DETAIL OF "E"

Item	PART NO.	Qty	Description
17		A/R	MS POLYMER, GREY
16		22.8M	FOAM TAPE
15		23.3M	ONE SIDE TAPE (2.0t x 25w)
14		220	PVC FILM GASKET (0.25t x 4.7I.D. x 110.D.)
13		23.3M	FOAM TAPE(3.2t x 18w)
12		A/R	MS or URETHANE SEALANT, GREY
11		A/R	FOAM ADHESIVE
10		4.2M	FOAM TAPE(10t x 20w)
9		76	BLIND REVIT(SUS.3/16"DIA. 6MM GRIP)
8		220	BLIND RIVET(ALUM.,3/16"DIA. 11MM GRIP)
7		4.2M	FOAM TAPE(1.6t x 25.4w)
6		23.3M	GASKET FOR ANGLE COVER(E.P.D.M.)
5		4.4M	EPDM COMPRESS GASKET
4		2	SIDE LINING PANEL, INTERM.(H.G.S.S.)
3		2	SIDE LINING PANEL, REAR(H.G.S.S.)
2		2	SIDE LINING PANEL, FRONT(H.G.S.S.)
1		16	SIDE LINING PANEL, MAIN(H.G.S.S.)

TITLE

SIDE LINING ASSEMBLY

APP'ED	H.J.PARK	CUSTOMER NAME			
VERIF'D	JIM.ZHANG	CONT. SIZE	40' H/C	DATE	2010-11-03
DESIGN	Q.YANG	SCALE	1:40	PRO-JECTION	
DRAWN	Q.YANG	DRWG NO.	MQRS-40SL-01AD		

MAERSK CONTAINER INDUSTRY QINGDAO LTD.

NOTE : THIS DRAWING AND COPYRIGHT THEREIN ARE THE PROPERTY OF MAERSK CONTAINER INDUSTRY QINGDAO LTD. THE DRAWING MUST NOT BE USED, COPIED OR EXHIBITED WITHOUT THE WRITTEN PERMISSION OF MAERSK CONTAINER INDUSTRY QINGDAO LTD.

NO.	DATE	REVISION REC	VERIF'D
C	2014-05-17	ADD REINFORCEMENT STRIP T	WILLIAM
D	2015-11-10	CHANGED ROOF STRINGER LENGTH	WILLIAM

CITY OF PORTLAND, MAINE — RESURGAM
Reviewed for Code Compliance
Inspections Division
Approved with Conditions
Date: 02/22/18

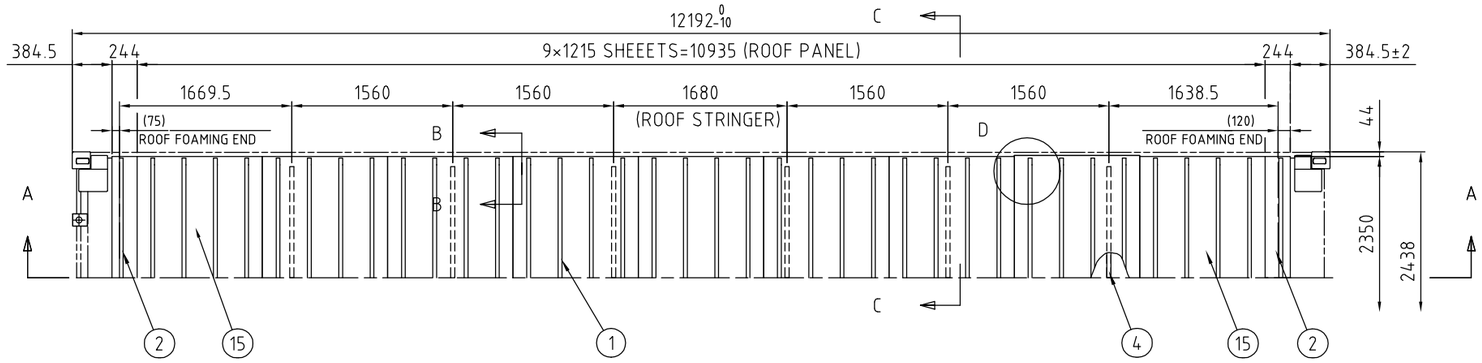

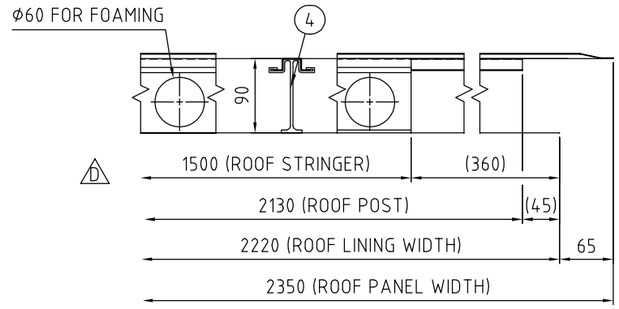

SECTION B-B (1:5)

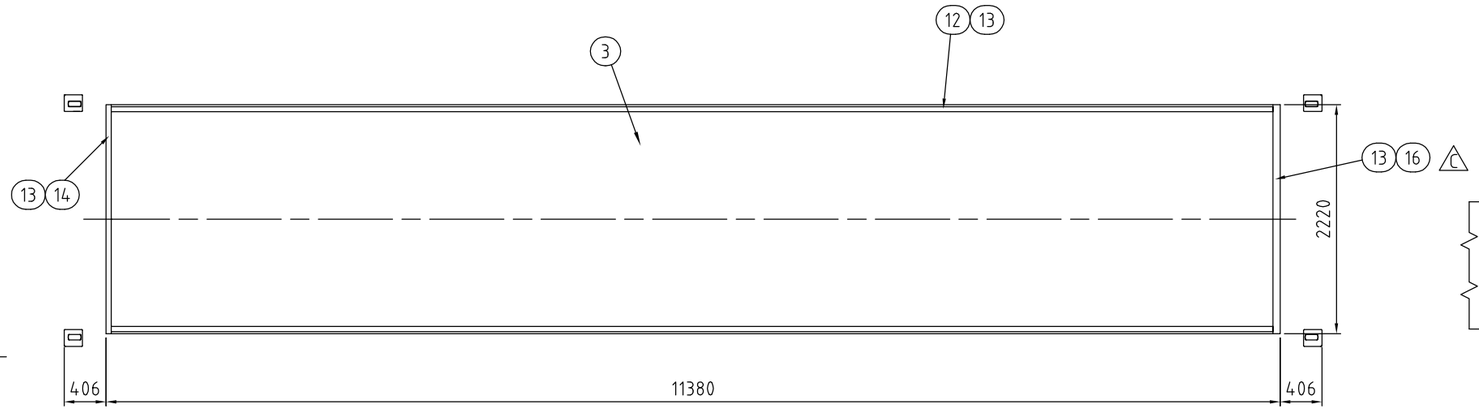

ROOF LINING PANEL (INSIDE VIEW)

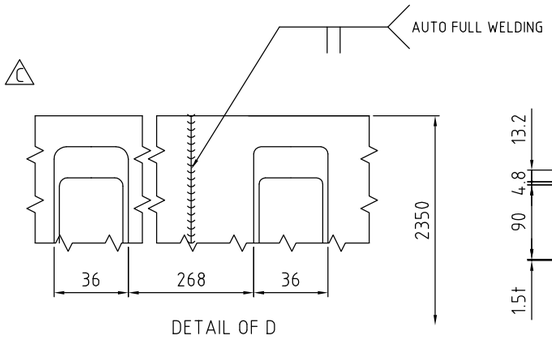

DETAIL OF D
(1:5)

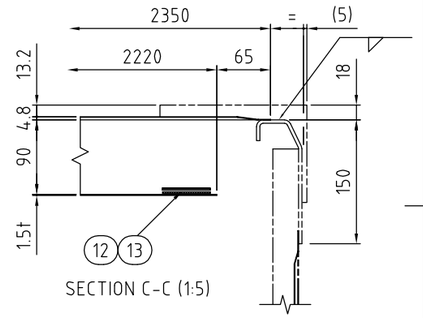

SECTION C-C (1:5)

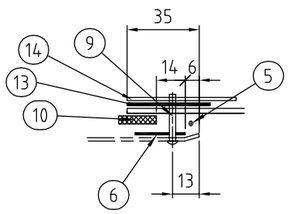

DETAIL OF F
(1:2)

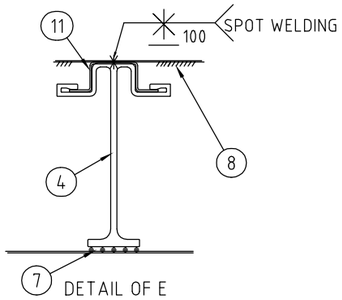

DETAIL OF E
(1:2)

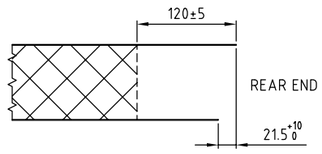

FOAMING CONDITION

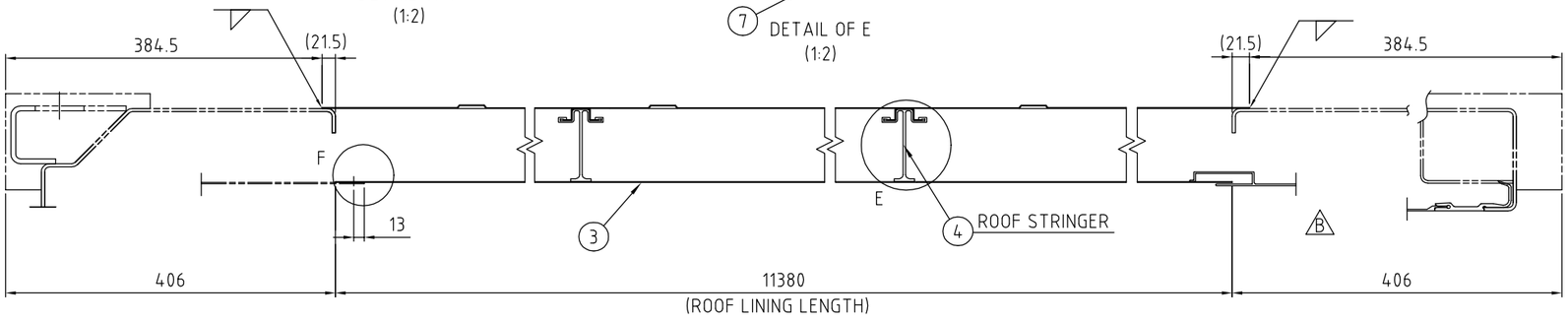

SECTION A-A (1:5)

Item	PART NO.	Qty	Description
16		1	REINFORCEMENT STRIP TRANSVERSAL B (ALUM. 0.8t)
15		2	ROOF PANEL MAIN "B" (0.8t, H.G.S.S.)
14		1	REINFORCEMENT STRIP TRANSVERSAL A (ALUM. 0.8t)
13		31.3 M	PE FOAM TAPE(1.0t x 50w BOTH SIDE)
12		2	REINFORCEMENT STRIP LONGITUDINAL (ALUM. 0.8t)
11		6	ROOF PANEL POST(0.8t, MGSS)
10		2.3M	FOAM TAPE (10t×20w)
9		19	BLIND RIVET (ALUM., 3/16"DIA. 11MM GRIP)
8		A/R	FOAM ADHESIVE PRIMER
7		A/R	MS GLUE
6		2.3M	FOAM TAPE (1.6t×25.4w)
5		A/R	MS or URETHANE SEALANT, GREY
4		6	ROOF STRINGER
3		1	ROOF LINING (Q LINER, 1.5t)
2		2	ROOF PANEL END (0.8t,H.G.S.S.)
1		7	ROOF PANEL MAIN "A" (0.8t, M.G.S.S.)

TITLE

ROOF ASSEMBLY

APP'ED	H.J.PARK	CUSTOMER NAME			
VERIF'D	WILLIAM.ZHOU	CONT. SIZE	40'	DATE	2011-06-21
DESIGN	Z.YU	SCALE	1:40	PRO-JECTION	
DRAWN	Z.YU	DRWG NO.	MQRS-40RA-07AD		

MAERSK CONTAINER INDUSTRY QINGDAO LTD.

NOTE : THIS DRAWING AND COPYRIGHT THEREIN ARE THE PROPERTY OF MAERSK CONTAINER INDUSTRI QINGDAO LTD. THE DRAWING MUST NOT BE USED, COPIED OR EXHIBITED WITHOUT THE WRITTEN PERMISSION OF MAERSK CONTAINER INDUSTRI QINGDAO LTD.

NO.	DATE	REVISION REC		VERIF'D
B	2015-04-15	CHANGE LINING SUPPORT AND JAI	NG	WILLIAM
C	2015-05-28	CHANGED SEALING METHOD O		WILLIAM

CITY OF PORTLAND, MAINE — RESURGAM

Reviewed for Code Compliance
Inspections Division
Approved with Conditions
Date: 02/22/18

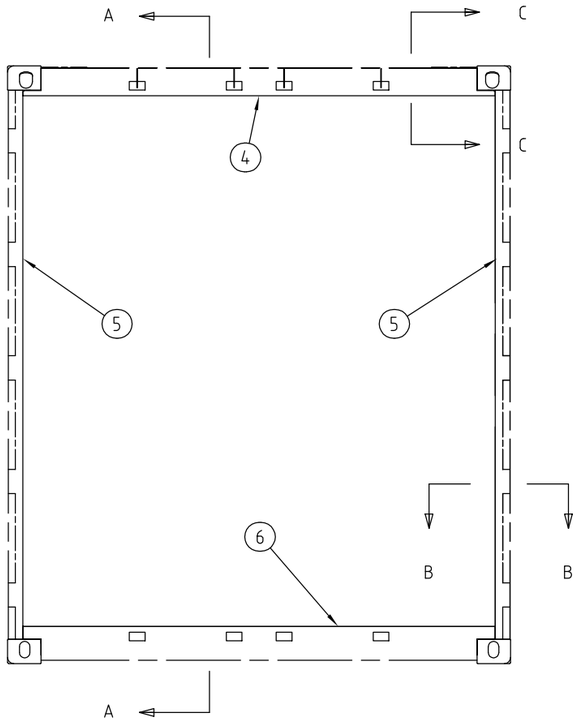

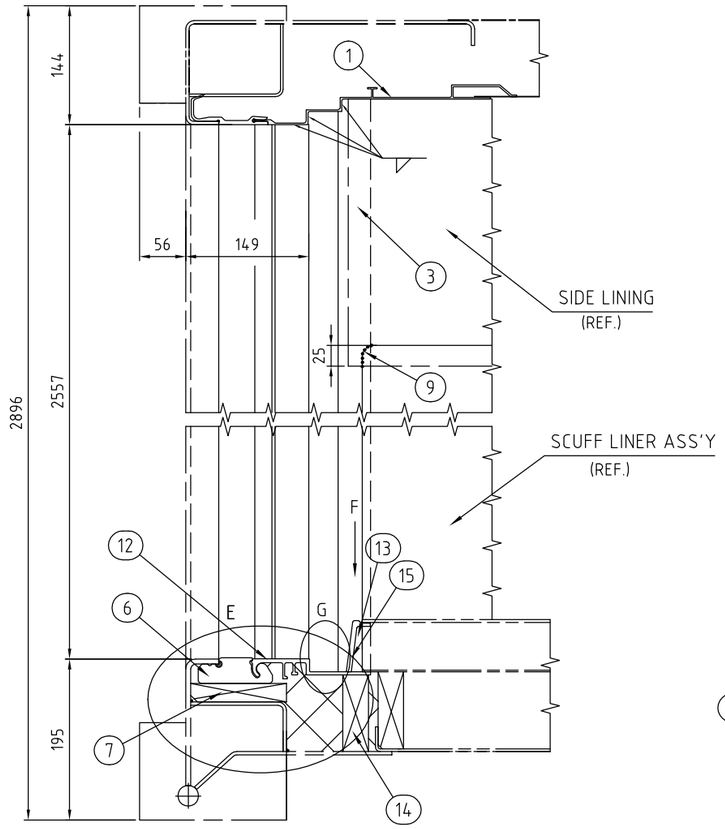

SECTION A-A (1:5)

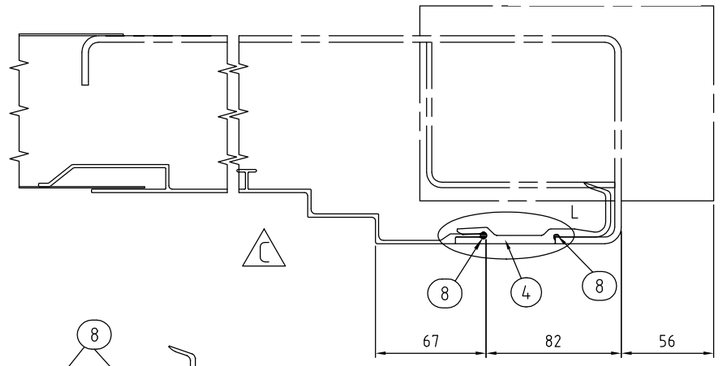

SECTION C-C (1:2.5)

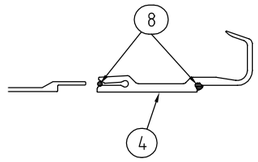

DETAIL OF L

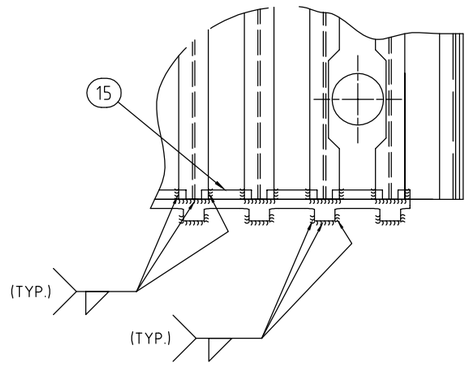

VIEW OF F (1:2)

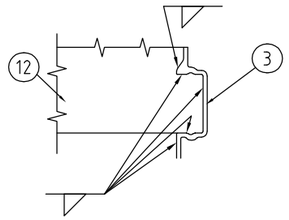

DETAIL OF J

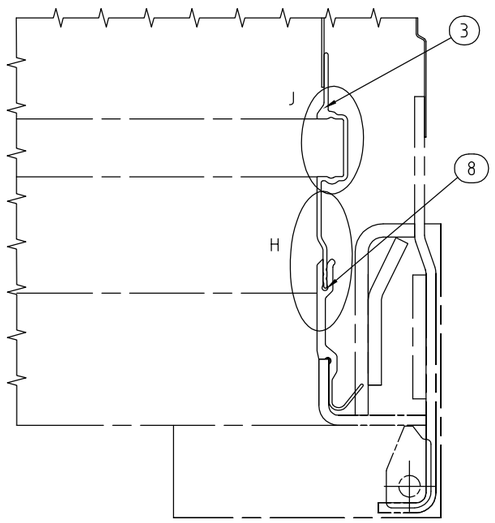

(REAR JAMB SILL & BLOCK LENGTH)

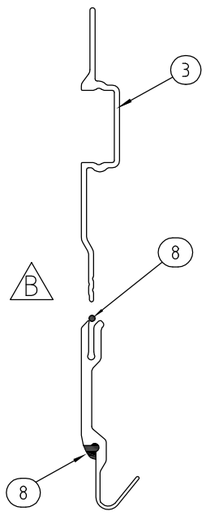

DETAIL OF H

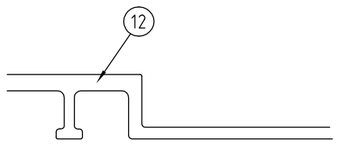

DETAIL OF G

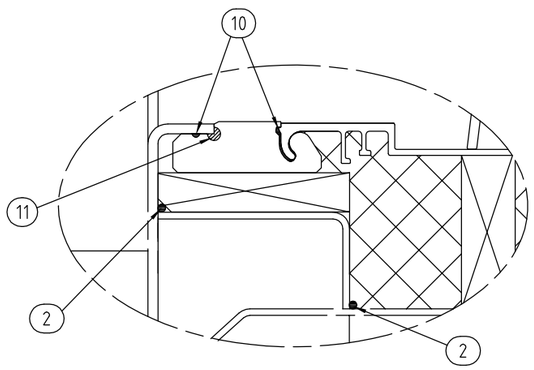

DETAIL OF E (1:10)

Item	PART NO.	Qty	Description
15		7	T-BOARD PROTECTOR (ALUM.)
14		1	REAR SILL FILLER "B"
13		2	PATCH
12		1	REAR SILL GUTTER (ALUM.)
11		1	GASKET FOR REAR SILL BLOCK
10		A/R	MS SEALANT OR EQUIVALENT
9		A/R	MS POLYMER, GREY
8		A/R	MS or URETHANE SEALANT
7		1	JAMB SILL FILLER "A"
6		1	REAR SILL BLOCK (P.V.C.)
5		2	REAR JAMB POST (P.V.C.)
4		1	REAR JAMB HEADER (P.V.C.)
3		2	LINING SUPPORT (ALUM.)
2		A/R	BUTYL SEALANT, GREY
1		1	REAR TOP ANGLE (ALUM.)

TITLE

REAR JAMB ASSEMBLY

APP'ED	H.J.PARK	CUSTOMER NAME			
VERIF'D	WILLIAM.ZHOU	CONT. SIZE	40'HC	DATE	2014-09-26
DESIGN	Z.YU	SCALE	1:20	PRO-JECTION	
DRAWN	Z.YU	DRWG NO.	MQRS-40RJ-34AC		

MAERSK CONTAINER INDUSTRY QINGDAO LTD.

NOTE : THIS DRAWING AND COPYRIGHT THEREIN ARE THE PROPERTY OF MAERSK CONTAINER INDUSTRY QINGDAO LTD. THE DRAWING MUST NOT BE USED, COPIED OR EXHIBITED WITHOUT THE WRITTEN PERMISSION OF MAERSK CONTAINER INDUSTRY QINGDAO LTD.

NO.	DATE	REVISION REC	VERIF'D
B	2014-03-10	CHANGED NOTCHING OF FRON	WILLIAM
C	2015-05-28	CHANGED SEALING METHOD O	WILLIAM

CITY OF PORTLAND, MAINE — RESURGAM
Reviewed for Code Compliance
Inspections Division
Approved with Conditions
Date: 02/22/18

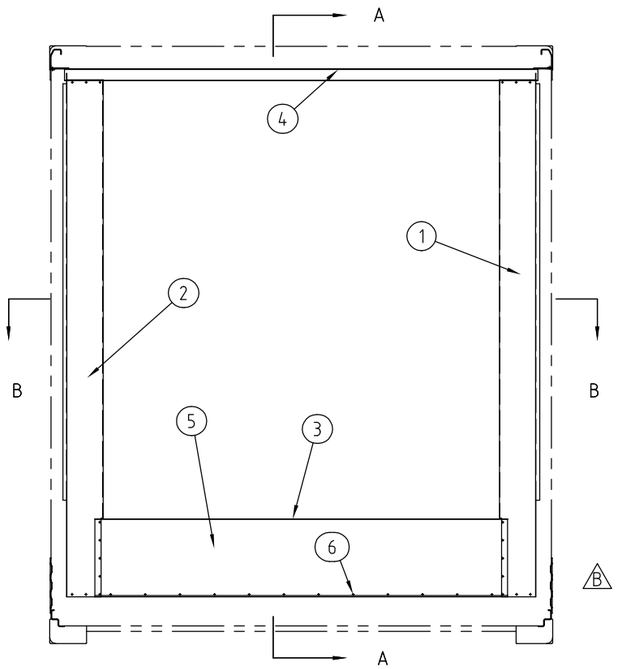

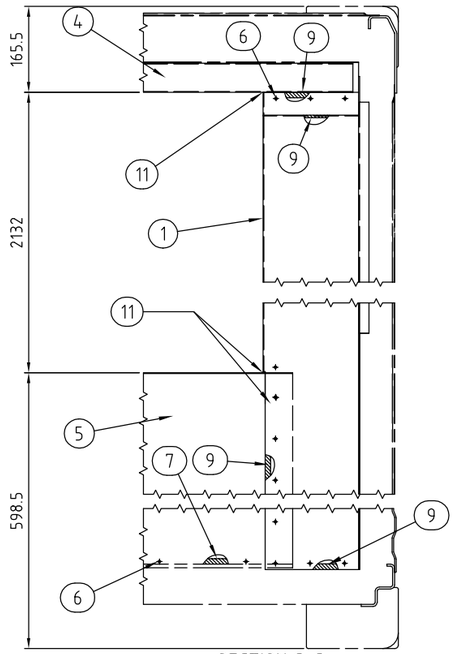

SECTION C-C
(1:2.5)

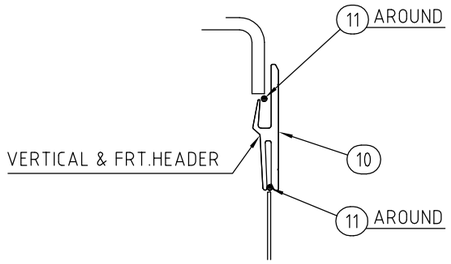

DETAIL OF E
(1:10)

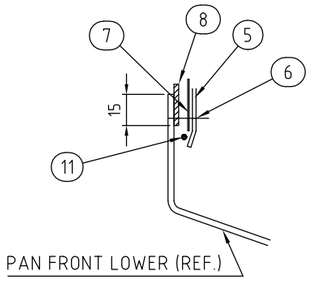

DETAIL OF F
(1:2)

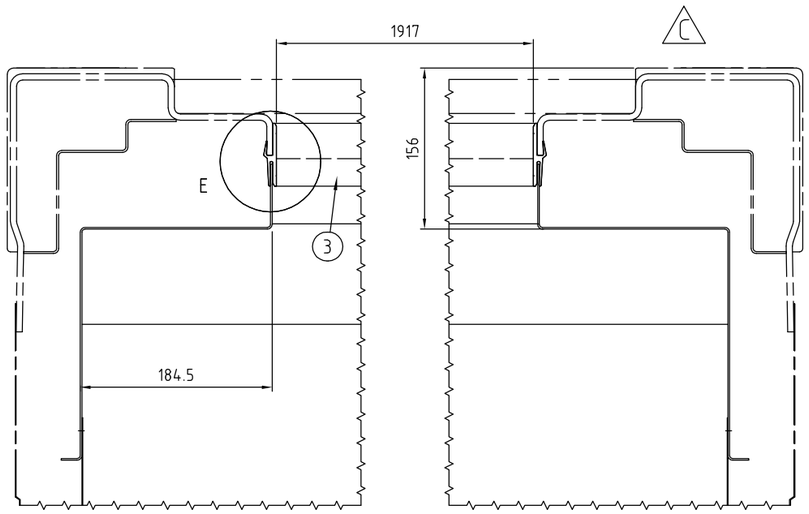

SECTION B-B

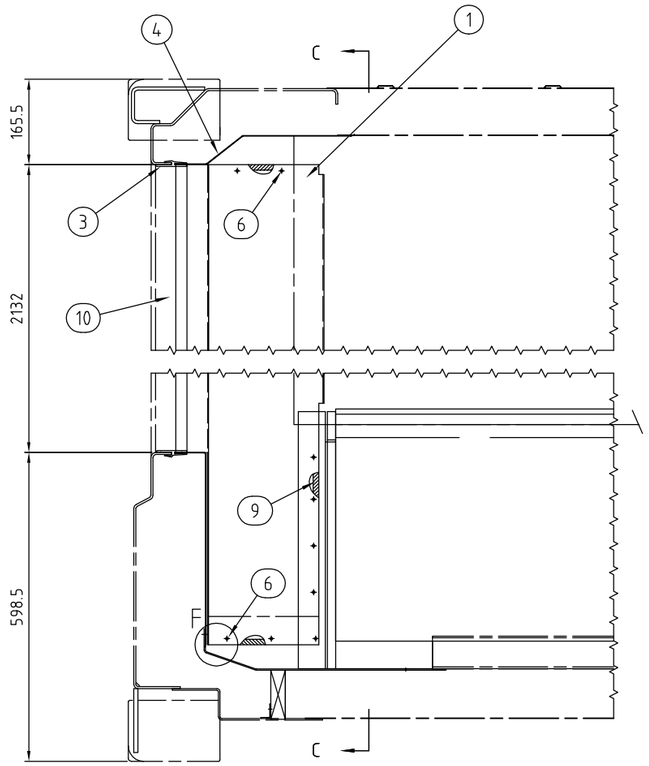

SECTION A-A

Item	PART NO.	Qty	Description
11		A/R	MS or URETHANE SEALANT, GREY
10		2	FRONT COVER, VERTICAL (P.V.C.)
9		3.6M	FOAM TAPE (10t x 35w)
8		2.3M	FOAM TAPE (10t x 20w)
7		2.3M	FOAM TAPE (1.6t x 25.4w)
6		52	BLIND RIVET (ALUM., 3/16"DIA. 11MM GRIP)
5		1	PAN FRONT UPPER(AA5052-H34)
4		1	FRONT TOP LINING (AA5052-H34)
3		2	FRONT COVER HORIZONTAL(P.V.C.)
2		1	FRONT SIDE LINING (L.H) (ALUM.)
1		1	FRONT SIDE LINING (R.H) (ALUM.)

TITLE
FRONT LINING ASSEMBLY

APP'ED	H.J.PARK	CUSTOMER NAME			
VERIF'D	WILLIAM.ZHOU	CONT. SIZE	40' HC	DATE	2010-11-03
DESIGN	Q.YANG	SCALE	1:20	PRO-JECTION	
DRAWN	Q.YANG	DRWG NO.	MQRS-40FL-01AC		

MAERSK CONTAINER INDUSTRY QINGDAO LTD.

NOTE : THIS DRAWING AND COPYRIGHT THEREIN ARE THE PROPERTY OF MAERSK CONTAINER INDUSTRY QINGDAO LTD. THE DRAWING MUST NOT BE USED, COPIED OR EXHIBITED WITHOUT THE WRITTEN PERMISSION OF MAERSK CONTAINER INDUSTRY QINGDAO LTD.

NO.	DATE	REVISION REC		VERIF'D
B	2013-03-18	CHANGED FRONT BAFFLE PLA		WILLIAM
C	2013-06-18	CHANGED DIMENSION		WILLIAM
D	2013-12-17	ADDED INSTALLATION DIMENSION FOR FRONT VT BAFFLE PLATE LOWER	H.L.ZHANG	WILLIAM
E	2016-05-11	CANCEL FOAM TAPE AT VERTICAL BAFFLE PLATE	Z.YU	WILLIAM

CITY OF PORTLAND, MAINE — RESURGAM

Reviewed for Code Compliance
Inspections Division
Approved with Conditions
Date: 02/22/18

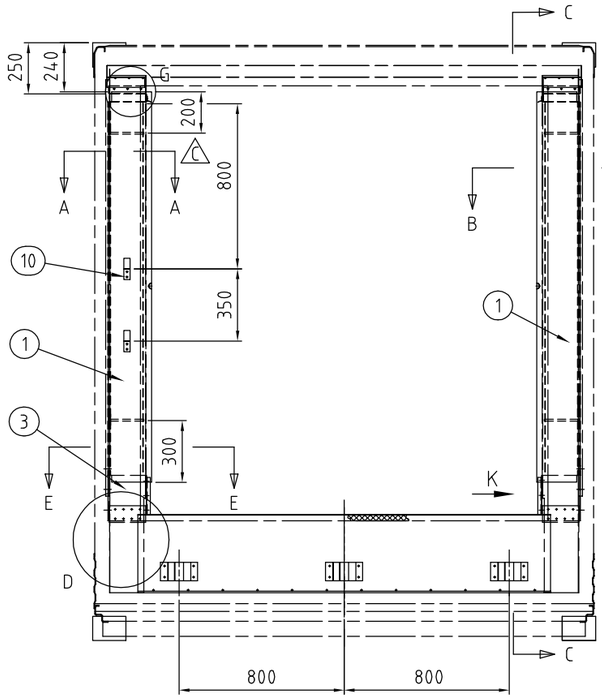

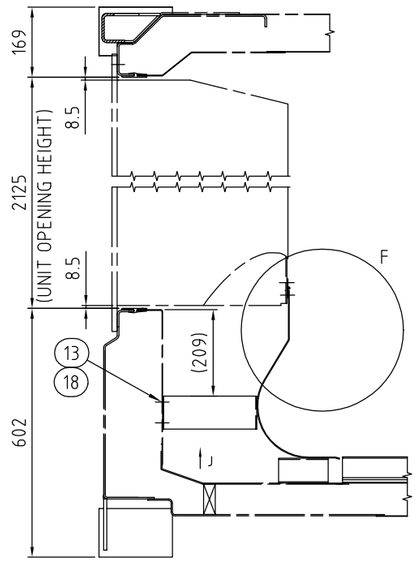

SECTION C-C (1:10)

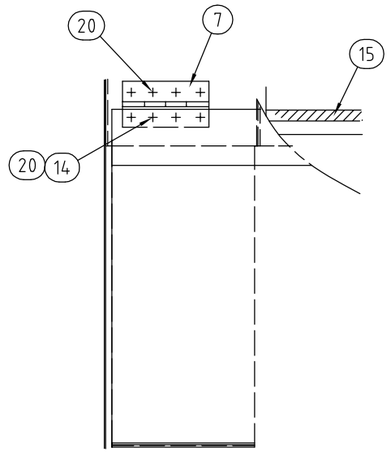

DETAIL OF D
(1:5)

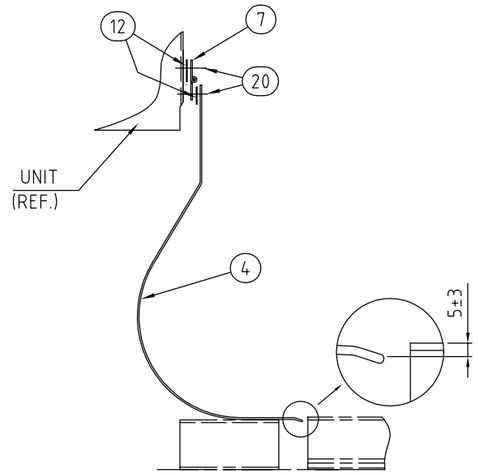

DETAIL OF F
(1:5)

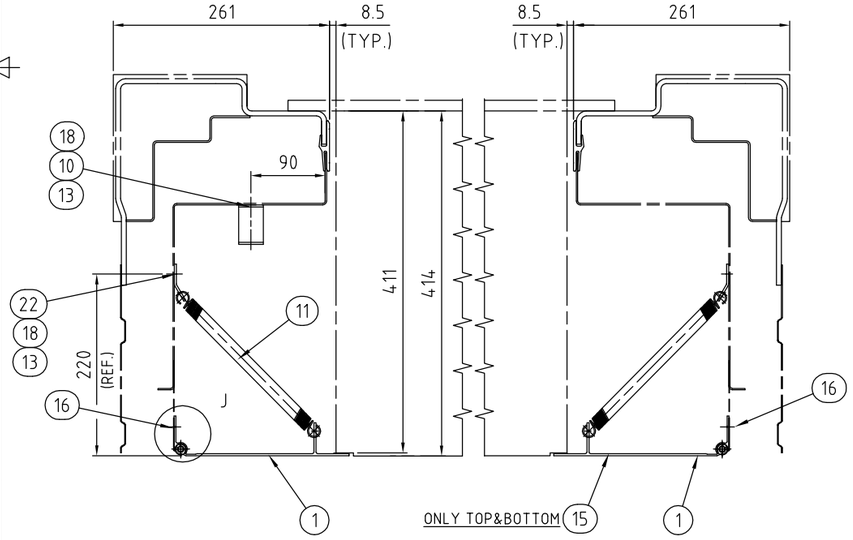

SECTION A-A (1:5)

SECTION B-B (1:5)

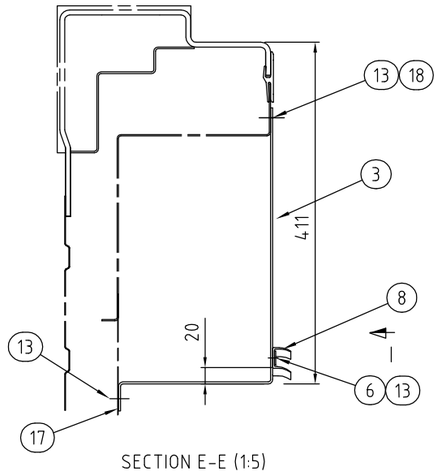

SECTION E-E (1:5)

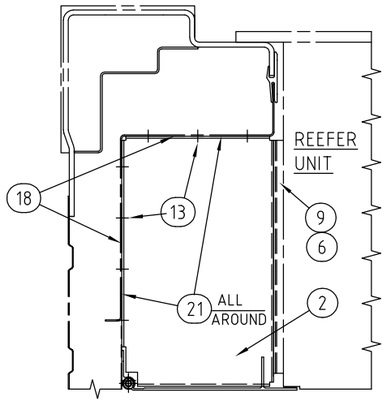

VIEW OF H

✳ ONLY FOR CARRIER REEFER UNIT

Item	PART NO.	Qty	Description
22		4	STRIP, SPRING
21		A/R	MS or URETHANE SEALANT
20		16	BLIND RIVET (SUS., 3/16"., 11MM GRIP)
19		12	LARGE HEAD RIVET (ALUM., 3/16"DIA.)
18		6.2M	P.V.C. FOAM TAPE (1.6t×25.4w)
17		0.5M	INSULATION TAPE (0.25t×25w)
16		26	BLIND RIVET (ALUM., 1/4"DIA., 9MM GRIP)
15		5.5M	P.V.C. FOAM TAPE (3.2t×18w)
14		8	PVC. FILM GASKET (0.25t×4.7I.D.×110.D.)
13		52	BLIND RIVET (ALUM., 3/16"DIA., 11MM GRIP)
12		0.2M	INSULATION TAPE (0.25t×38.1w)
11		4	COIL SPRING ASS'Y
10		2	TEMPERATURE SENSOR BRACKET
9		2	UNIT GASKET UPPER
8		2	UNIT GASKET LOWER
7		2	SUS HINGE (52 x 100)
6		4	STRIP, UNIT GASKET ("A","B")
5		3	FRONT BAFFLE PLATE BACK SUPPORT(EPDM)
4		1	FRONT BAFFLE PLATE(ALUMINUM)
3		2	VERTICAL BAFFLE PLATE (BOTTOM)
2		2	SIDE BAFFLE PLATE (UPPER)
1		2	VERTICAL BAFFLE PLATE ASS'Y

TITLE

BAFFLE PLATE ASSEMBLY

APP'ED	H.J.PARK	CUSTOMER NAME			
VERIF'D	WILLIAM.ZHOU	CONT. SIZE	40'HC	DATE	2011-04-05
DESIGN	Z.YU	SCALE	1:20	PRO-JECTION	
DRAWN	Z.YU	DRWG NO.	MQRS-40BP-01AE		

MAERSK CONTAINER INDUSTRY QINGDAO LTD.

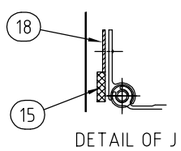

DETAIL OF J
(1:2.5)

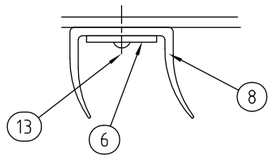

DETAIL OF UNIT GASKET
(1:1)

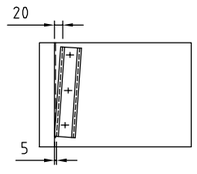

VIEW OF I

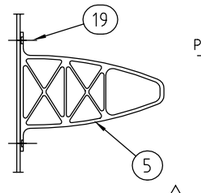

VIEW OF J

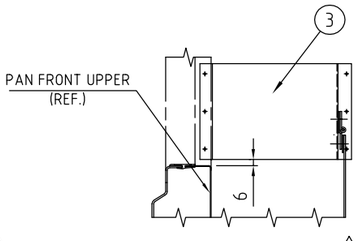

VIEW OF K

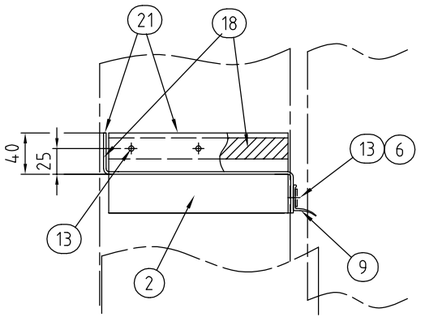

DETAIL OF G
(1:4)

NOTE : THIS DRAWING AND COPYRIGHT THEREIN ARE THE PROPERTY OF MAERSK CONTAINER INDUSTRI QINGDAO LTD. THE DRAWING MUST NOT BE USED, COPIED OR EXHIBITED WITHOUT THE WRITTEN PERMISSION OF MAERSK CONTAINER INDUSTRI QINGDAO LTD.

NO.	DATE	REVISION REC	VERIF'D

Reviewed for Code Compliance
Inspections Division
Approved with Conditions
Date: 02/22/18

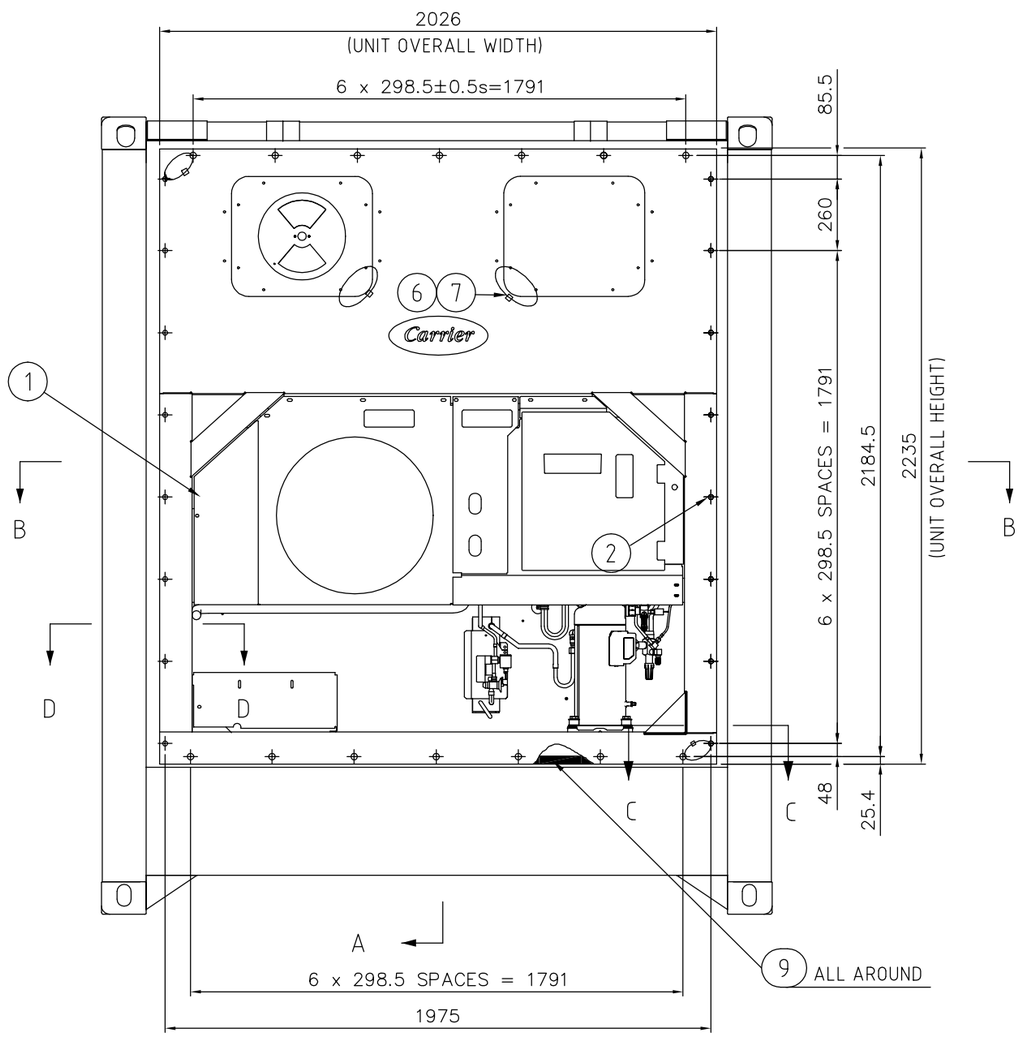

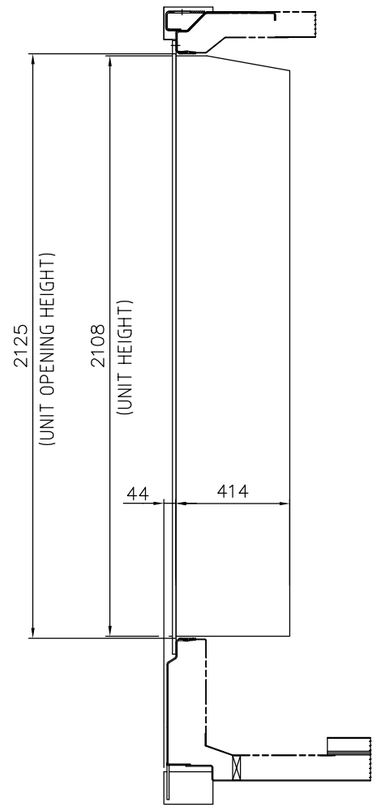

SECTION A-A

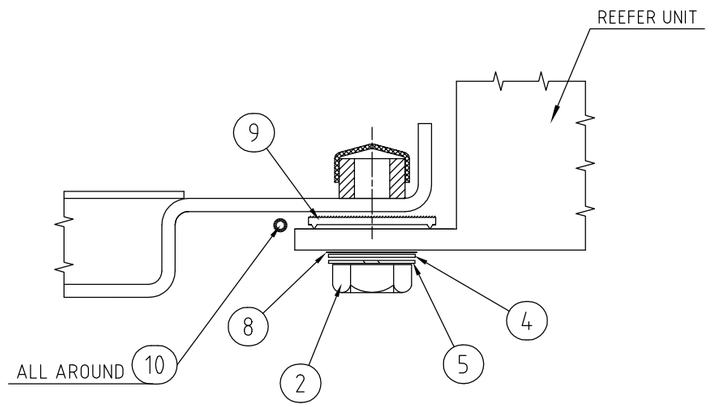

SECTION D-D
(1 : 2)

NOTE:
1. TORQUE OF HEX. BOLT IS 1500 ~1700 KG.CM.
(150 ~ 170 N.M.)

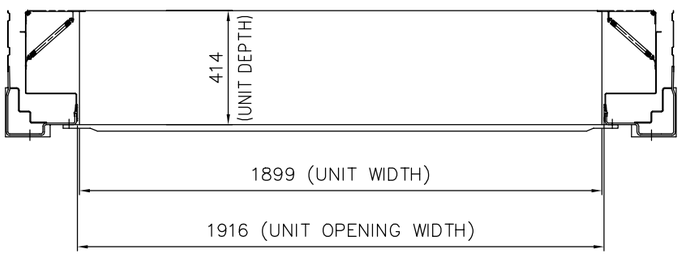

SECTION B-B

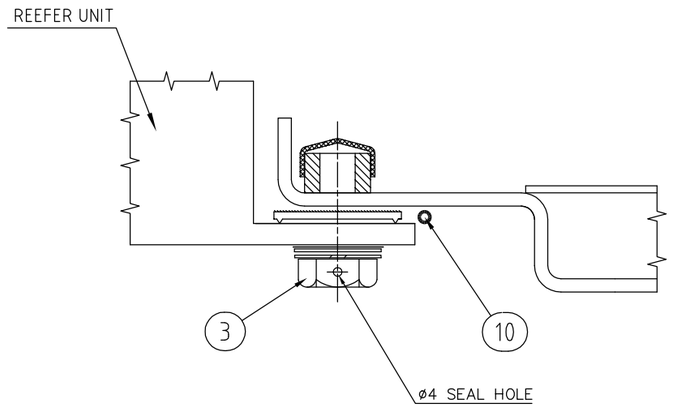

SECTION C-C
(1 : 2)

Item	PART NO.	Qty	Description
10		A/R	URETHANE or SILICONE SEALANT,WHITE
9		1 SET	GASKET FOR UNIT (EPDM)
8		30	GASKET, BOLT (1.0t) (EPOXY)
7		4	WIRE SLEEVE (ø2)
6		2M	WIRE (ø1 ~ ø1.5) (SUS)
5		30	SPRING WASHER (4t×M16) (SUS304)
4		30	PLANE WASHER (3t×M16) (SUS304)
3		4	HEX BOLT (M16, W/HOLE) (SUS304)
2		26	HEX BOLT (M16) (SUS304)
1		1	REEFER UNIT (CARRIER)

TITLE
REEFER UNIT ASSEMBLY

APP'ED	H.J.PARK	CUSTOMER NAME			
VERIF'D	JIM ZHANG	CONT. SIZE	40' HC	DATE	2011-04-05
DESIGN	Q.YANG	SCALE	1:15	PRO-JECTION	
DRAWN	Q.YANG	DRWG NO.	MQRS-40RU-01AA		

MAERSK CONTAINER INDUSTRY QINGDAO LTD.

NOTE : THIS DRAWING AND COPYRIGHT THEREIN ARE THE PROPERTY OF MAERSK CONTAINER INDUSTRY QINGDAO LTD. THE DRAWING MUST NOT BE USED, COPIED OR EXHIBITED WITHOUT THE WRITTEN PERMISSION OF MAERSK CONTAINER INDUSTRY QINGDAO LTD.

NO.	DATE	REVISION REC	VERIF'D

Reviewed for Code Compliance
Inspections Division
Approved with Conditions
Date: 02/22/18

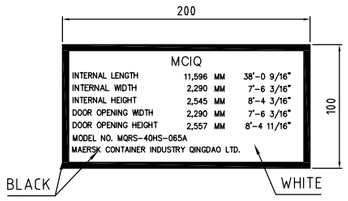

DETAIL OF (21)

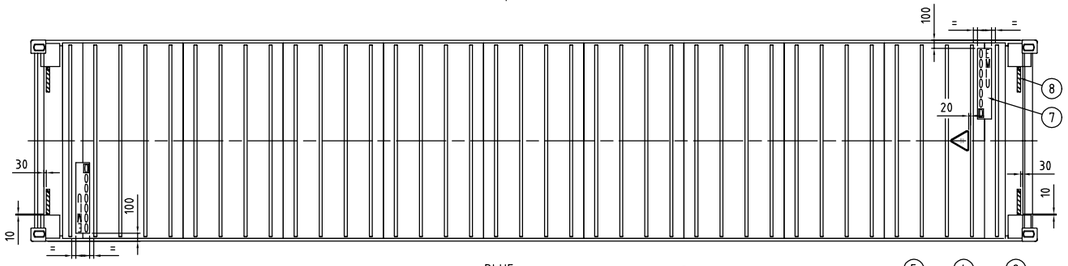

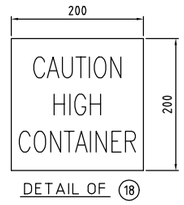

DETAIL OF (18)

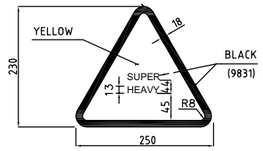

(16) SUPER HEAVY DECAL

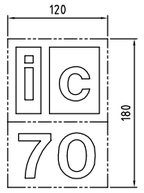

U.I.C. DECAL (15)

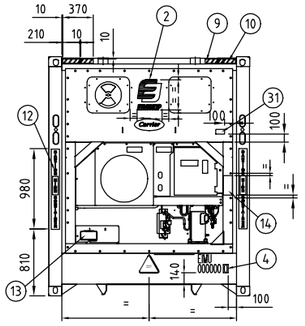

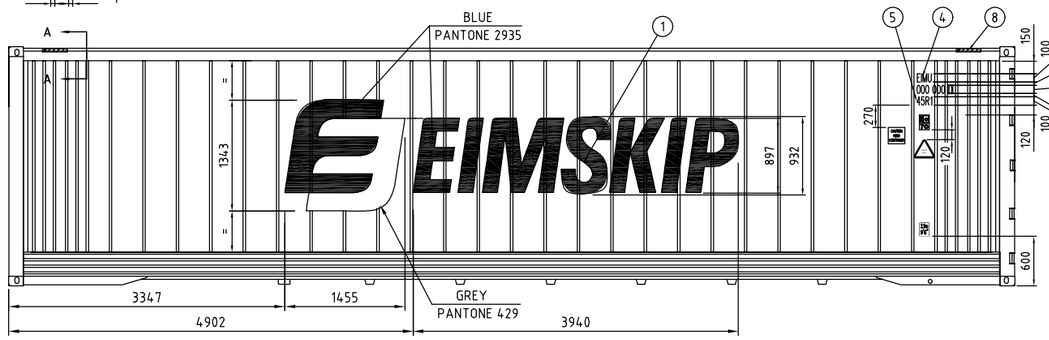

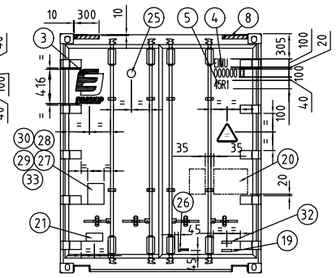

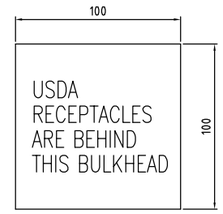

DETAIL OF (11)

ITEM	PART NO.	Q'TY	DESCRIPTION
33		1	REINSPECTION DECAL
32		1	SUPOTEC STICKER
31		1	WARRANTY STICKER
30		4	PVC. FILM GASKET (0.25t×4.7I.D.×110.D.)
29		1	ACRYLIC TAPE
28		4	BLIND RIVET (SUS., 3/16"DIA. 6MM GRIP)
27		1	CONSOLIDATED DATA PLATE (ALUM.)
26		1	FASTEN SEAL HERE DECAL (BLACK ON YELLOW)
25		1	CLASS SOCIETY DECAL
24		10	LOAD LINE DECAL (WHIET ON RED)
23		1	SENSOR DECAL (BLACK ON WHITE)
22		1	MATERIAL SPEC. DECAL (BLACK ON WHITE)
21		1	DIMENSION DECAL (BLACK ON WHITE)
20		1	WEIGHT DECAL (KISS CUT, BLACK)
19		1	MCIQ STICKER
18		2	CAUTION HIGH CONTAINER DECAL(BLACK ON YELLOW)
17		2	HIGHT DECAL (BLACK ON YELLOW)
16		5	SUPER HEAVY DECAL (BLACK ON YELLOW)
15		2	UIC DECAL (KISS CUT, BLACK)
14		1	TEMPERATURE DECAL (BLACK ON CLEAR)
13		1	PTI DECAL (BLACK ON CLEAR)
12		2	CAUTION HIGH CONTAINER DECAL (BLACK ON YELLOW)
11		1	USDA RECEPTICAL (BLACK ON WHITE)
10		2	STRIP MARK (BLACK ON YELLOW,50x210)
9		2	STRIP MARK (BLACK ON YELLOW,50x150)
8		10	STRIP MARK (BLACK ON YELLOW,50x300)
7		2	SERIAL NO. ON ROOF (BLUE ON WHITE)
6		1	SERIAL NO., VERTICAL(KISS CUT, BLUE)
5		3	SIZE AND TYPE (KISS CUT, BLUE)
4		4	SERIAL NO., HOR.(KISS CUT, BLUE)
3		1	DOOR LOGO (KISS CUT)
2		1	FRONT LOGO (KISS CUT)
1		2	SIDE LOGO (KISS CUT)

TITLE

MARKING ARRANGEMENT

APP'ED	H.J.PARK	CUSTOMER NAME		EIMSKIP	
VERIF'D	WILLIAM.ZHOU	CONT. SIZE	40' H/C	DATE	2016-05-10
DESIGN	Z.YU	SCALE	1:50	PRO-JECTION	
DRAWN	Z.YU	DRWG NO.	MQRS-40HS-143A-MA(CR)		

MAERSK CONTAINER INDUSTRY QINGDAO LTD.

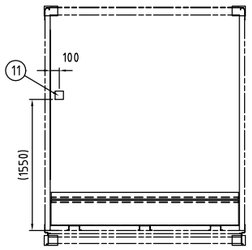

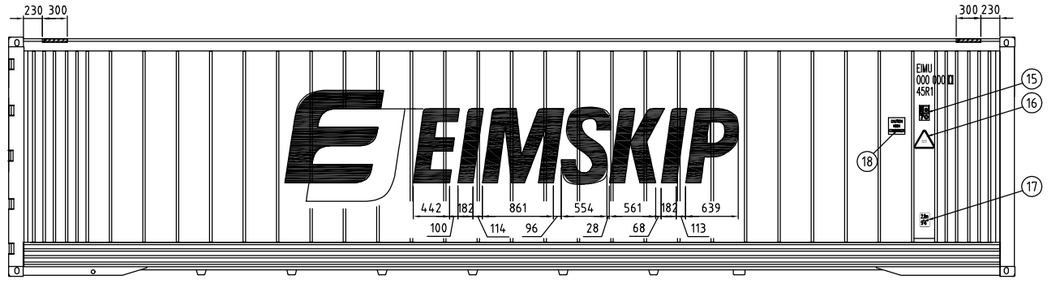

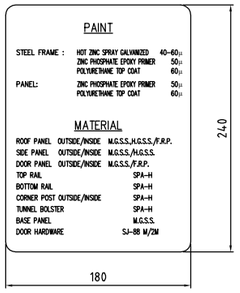

DETAIL OF (22)

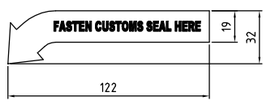

(26) CUSTOMS SEAL DECAL

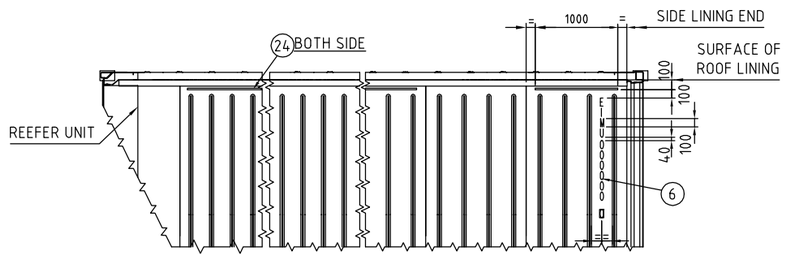

R.H. INTERIOR VIEW

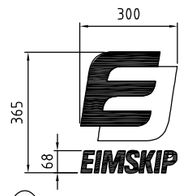

(2) DETAL OF FRONT LOGO

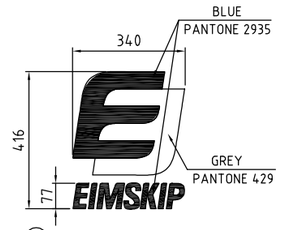

(3) DETAIL OF DOOR LOGO

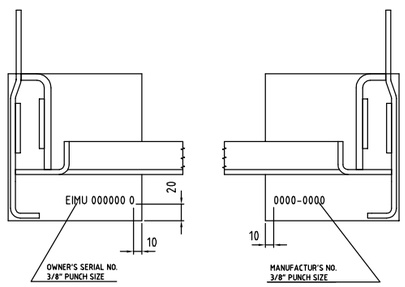

L.H. LOWER CASTING

R.H. LOWER CASTING

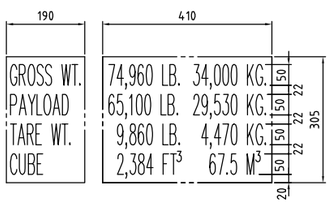

DETAIL OF WEIGHT DECAL (20)

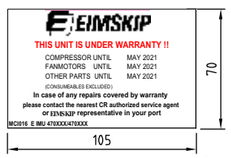

WARRANTY STICKER DECAL (31)

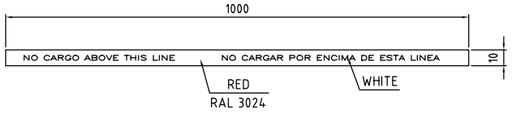

LOAD LINE DECAL (24)

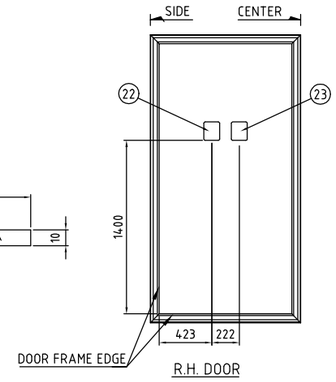

R.H. DOOR

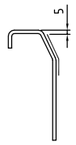

SECTION A-A

NOTE:
1. SIDE LOGO DIMENSION TOLERANCE IS ±5MM

NOTE : THIS DRAWING AND COPYRIGHT THEREIN ARE THE PROPERTY OF MAERSK CONTAINER INDUSTRY QINGDAO LTD. THE DRAWING MUST NOT BE USED, COPIED OR EXHIBITED WITHOUT THE WRITTEN PERMISSION OF MAERSK CONTAINER INDUSTRY QINGDAO LTD.

NO.	DATE	REVISION RECORD

Reviewed for Code Compliance
Inspections Division
Approved with Conditions
Date: 02/22/18

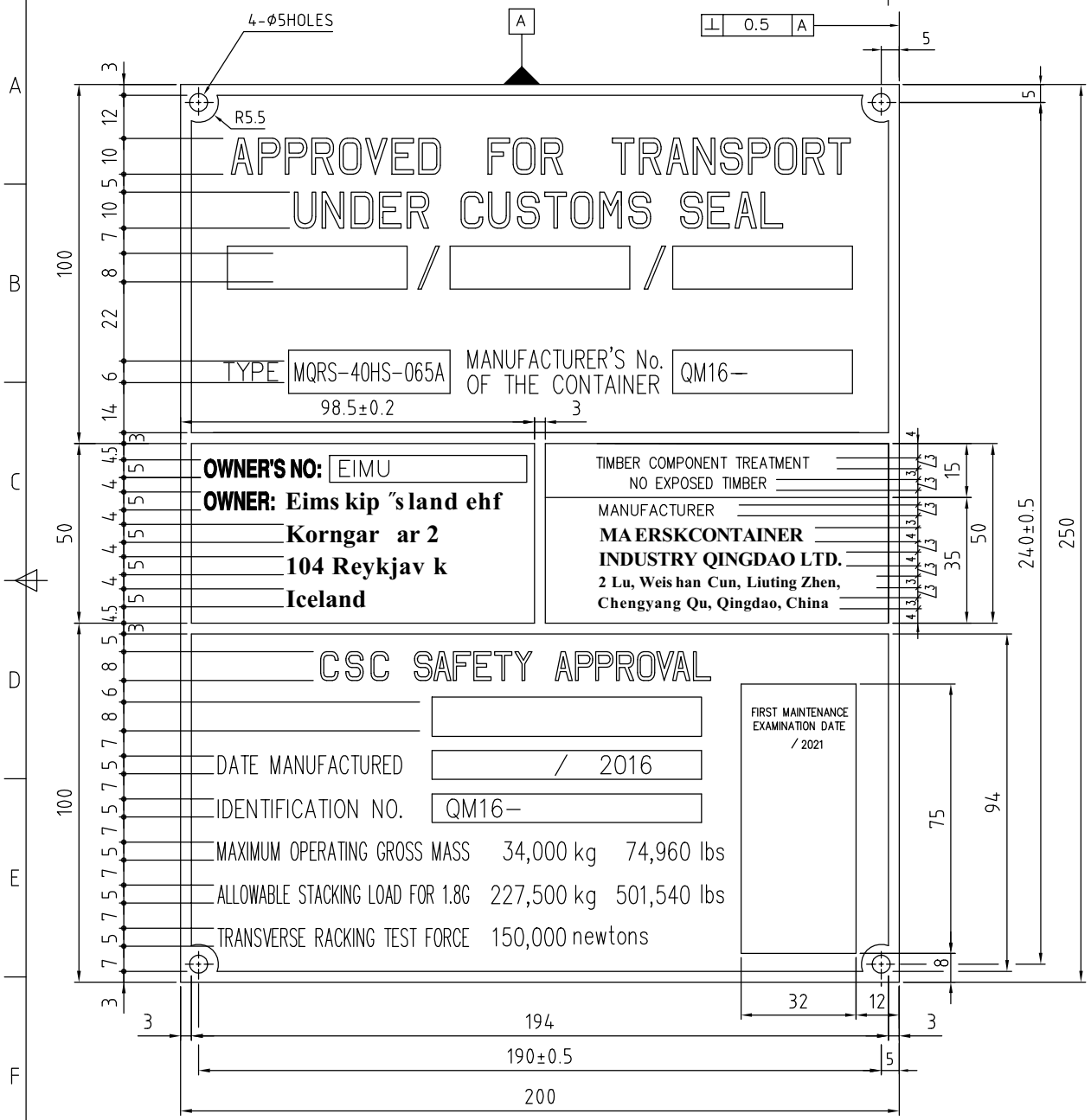

NOTE:
1. THICKNESS: 0.8T
2. BOTH SURFACES SHOULD BE ANODIZED. THE COLOR IS BLUE
3. THE LETTERS AND LINES SHOULD BE ETCHED OR WRITTEN BY LASER. THE COLOR IS WHITE.
4. BOTH SIDE ACRYLIC FOAM TAPE WILL BE APPLIED ON BACKSIDE OF THIS PLATE AS BELOW DRAWING. THICKNESS OF TAPE IS AROUND 1.0MM.
5. NO DISCOLORATION AND/OR CORROSION IN 10 YEARS.

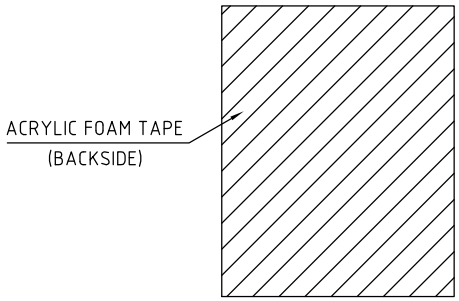

FOAM TAPE APPLICATION ON BACKSIDE OF MARKING PLATE

TITLE	CONSOLIDATED DATA PLATE				
APP'ED	H.J.PARK	DATE	2016-04-11	CUST. NAME	EIMSKIP
VERIF'D		MAT'L	AA5052-H34	CONT. SIZE	40' H/C
DESIGN	Z.YU	Q'TY	1 PC/BOX	SCALE	1:1.2
DRAWN	Z.YU	DRWG NO.		PRO-JECTION	

MAERSK CONTAINER INDUSTRY QINGDAO LTD.

NOTE : THIS DRAWING AND COPYRIGHT THEREIN ARE THE PROPERTY OF MAERSK CONTAINER INDUSTRI QINGDAO LTD. THE DRAWING MUST NOT BE USED, COPIED OR EXHIBITED WITHOUT THE WRITTEN PERMISSION OF MAERSK CONTAINER INDUSTRI QINGDAO LTD.