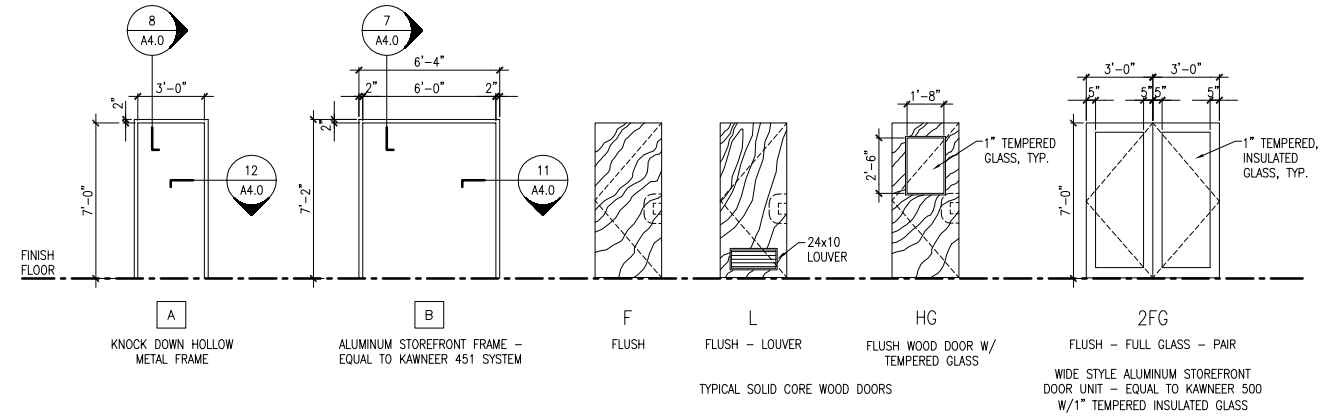

1 NOT USED
REFERENCED FROM: SCALE:

2 NOT USED
REFERENCED FROM: SCALE:

3 DOOR AND DOOR FRAME ELEVATIONS
REFERENCED FROM: SCALE: 1/4" = 1'-0"

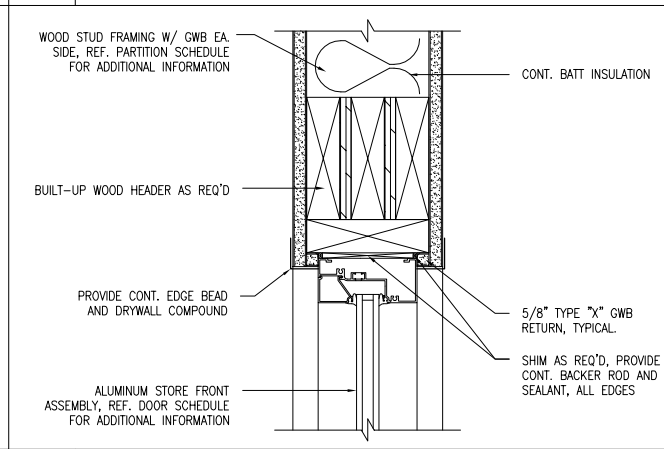

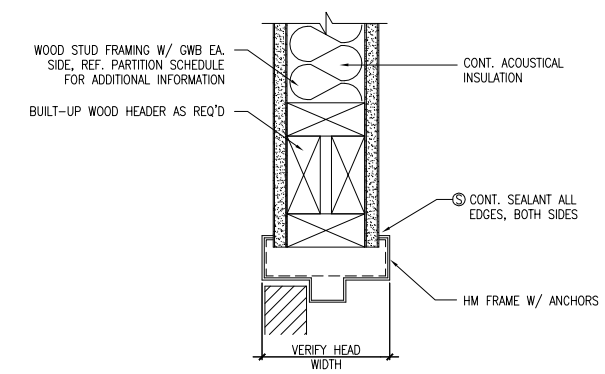

5 NOT USED
REFERENCED FROM: SCALE:

6 NOT USED
REFERENCED FROM: SCALE:

7 TYP. HEAD DETAIL @ ALUMINUM STOREFRONT
REFERENCED FROM: SCALE: 3" = 1'-0"

8 TYP. DETAIL @ DOOR HEAD
REFERENCED FROM: SCALE: 3" = 1'-0"

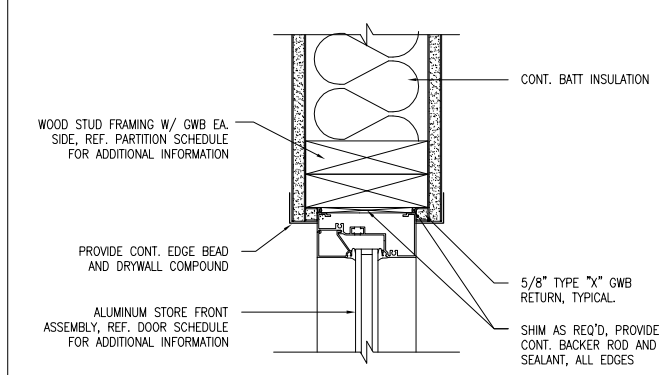

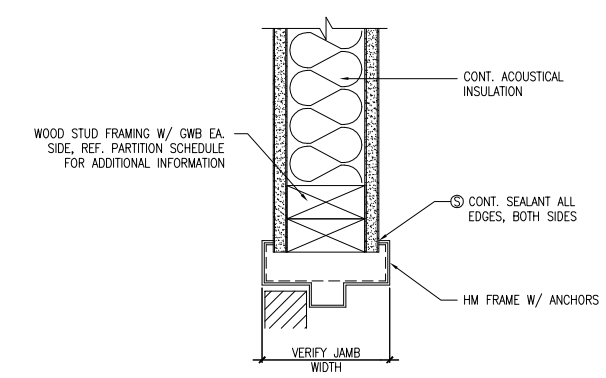

9 NOT USED
REFERENCED FROM: SCALE:

10 NOT USED
REFERENCED FROM: SCALE:

11 TYP. JAMB DETAIL @ ALUMINUM STOREFRONT
REFERENCED FROM: SCALE: 3" = 1'-0"

12 TYP. DETAIL @ DOOR JAMB
REFERENCED FROM: SCALE: 3" = 1'-0"

TOILET ROOM ACCESSORY LEGEND

1. SURFACE MOUNTED MULTI-ROLL TOILET PAPER DISPENSER: EQUAL TO BOBRICK B-2892.
2. SURFACE MOUNTED WASTE RECEPTACLE: EQUAL TO BOBRICK B-275.
3. CONTURA SERIES PARTITION-MOUNTED SANITARY NAPKIN DISPOSAL: EQUAL TO BOBRICK B-4354.
4. STAINLESS STEEL GRAB BARS W/ CONCEALED MOUNTING: EQUAL TO BOBRICK B-5507.99X42, X36.
5. GRAB BAR ANCHORS: EQUAL TO BOBRICK B-2562 SERIES.
6. CLOTHES HOOK: EQUAL TO BOBRICK B-2116.
7. MIRROR WITH STAINLESS STEEL FRAME: EQUAL TO BOBRICK B-290-7236; B-290-4836.
8. LAVATORY-MOUNTED SOAP DISPENSER (REFILLABLE FROM TOP): EQUAL TO BOBRICK B-822.
9. ROLL TYPE PAPER TOWEL DISPENSER: EQUAL TO BOBRICK B-2860.
10. EXTRA HEAVY DUTY CURTAIN ROD: EQUAL TO BOBRICK B-6047, CUT TO LENGTH REQUIRED AND INSTALLED AT 6'-6" A.F.F.
11. CONTURA SERIES RECESSED SANITARY NAPKIN DISPOSAL: EQUAL TO BOBRICK B-4353.
12. SURFACE MOUNTED TOWEL BAR: EQUAL TO BOBRICK B-674x24.
13. SURFACE MOUNTED STAINLESS STEEL MOP AND BROOM HOLDER: EQUAL TO BOBRICK B-223x24.

TOILET ROOM ACCESSORIES ARE SHOWN FOR DIAGRAMATIC PURPOSES ONLY. COORDINATE FINAL ACCESSORY TYPES AND REQUIREMENTS WITH OWNER.

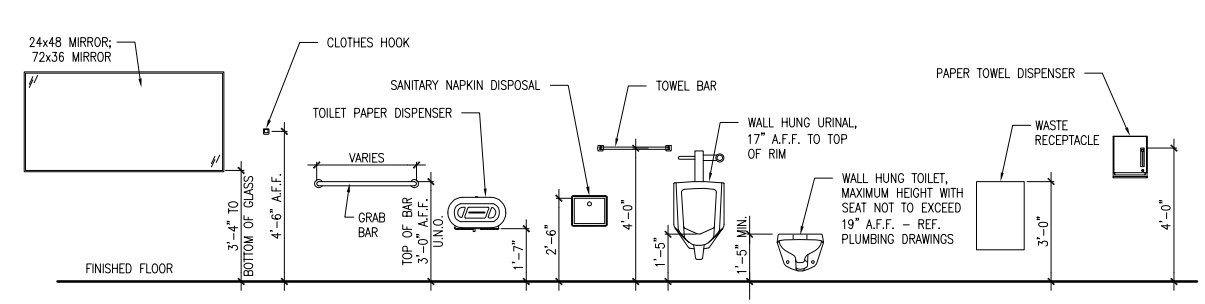

13 NOT USED
REFERENCED FROM: SCALE:

14 TOILET ROOM ACCESSORIES LEGEND AND INSTALLATION HEIGHTS
REFERENCED FROM: SCALE: 3/8" = 1'-0"

ISSUED FOR CONSTRUCTION 09/30/2005

CWS Architects
454 Cumberland Avenue
Portland, ME 04101
Phone: (207) 774-4441
Fax: (207) 774-4016
www.CWSarch.com

INTERIOR FIT-UP
145 MARGINAL WAY
145 MARGINAL WAY
PORTLAND, MAINE
04101

Owner:
PLANET FITNESS
8 THOMAS DRIVE
WESTBROOK, MAINE
04092

REVISIONS:

Description:	Date:

Drawing Title: **DOOR AND DOOR FRAME ELEVATIONS AND DETAILS AND TOILET LEGEND**
Scale: AS NOTED
Date: September 30, 2005
CWS Proj. No.: 0545.01.B

Drawing Number:
A4.0