Reviewed for Code Compliance
Inspections Division
Approved with Conditions

Date: 06/10/16

HYDRAULIC–SYSTEM

THIS BUILDING IS PROTECTED BY A HYDRAULICALLY DESIGNED AUTOMATIC SPRINKLER SYSTEM.

LOCATION: FOURTH

No. OF SPRINKLERS: 10
(CALCULATED)

BASIS OF DESIGN:
1. DENSITY (GPM/SQ.FT.) .10
2. DESIGNED AREA OF DISCHARGE (sq.ft.) 971

SYSTEM DEMAND:
1. WATER FLOW RATE (GPM) 176.9
2. RESIDUAL PRESSURE AT THE BASE OF THE RISER 86.5 (PSI)

HYDRAULIC DATA NAMEPLATE

TO BE MOUNTED AT SYSTEM RISER

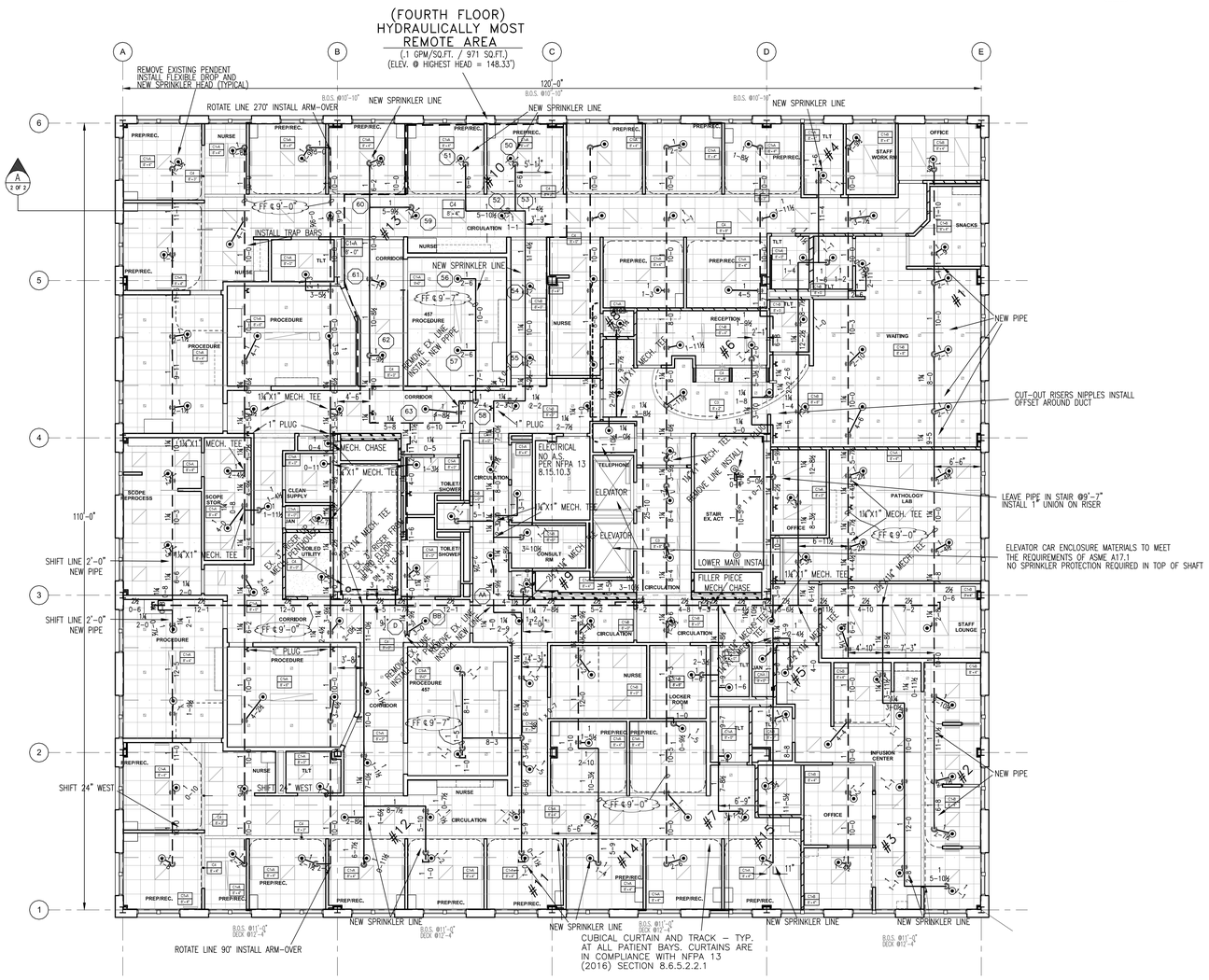

FIRE SPRINKLER PLAN – FOURTH FLOOR

SCALE: 1/8"=1'-0"
AREA PROTECTED: 13,200 SQ.FT.
FINISH FLOOR ELEVATION : 139.33
COLOR CODE:

Sprinkler Head Schedule

Symbol	Count	Thread	K-Factor	Description	Note
◉	143	1/2"	5.6	1/2" 200° RELIABLE CHROME RECESSED PENDENT K=5.6 SIN#RA1414	ON FLEX DROP
◎	2	1/2"	5.6	EXISTING 1/2" K-5.6 CHROME PENDENT ON DROP	on Drop
145 = Total Number of Heads FOURTH FLOOR					

0 1" 2" 3"
0 8' 16' 24'
1/8"=1'-0"GRAPHIC SCALE

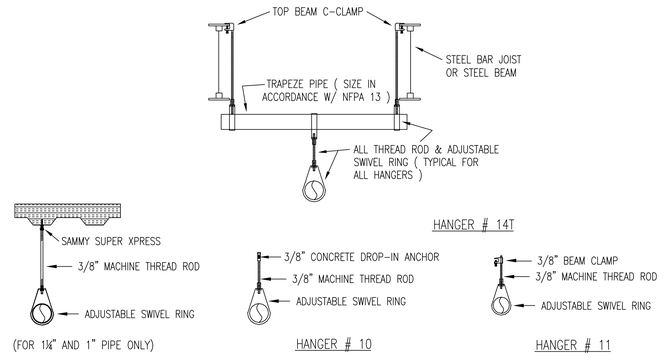

HANGER DETAILS

NOT TO SCALE

ALL HANGERS TO BE PROVIDED AND INSTALLED AS PER NFPA # 13
3/8" ROD FOR 1" TO 4" PIPE

NOTE: BEAM CLAMP TO BE ATTACHED TO ANGLE OF STEEL JOIST AND/OR BEAM FLANGES

GENERAL NOTES

SCOPE OF WORK
RENOVATE EXISTING WET SPRINKLER SYSTEM IN PORTLAND GASTROENTEROLOGY TENANT SPACES ON THIRD AND FOURTH FLOORS TO ACCOMMODATE NEW FLOOR PLAN AND MECHANICAL SYSTEMS IN COMPLIANCE WITH NFPA #13, STATE, AND LOCAL CODES. SPRINKLER PROTECTION ON ALL OTHER PORTIONS OF THE BUILDING TO REMAIN AS IS.

EASTERN FIRE PROTECTION TO START AT EXISTING MAINS AND LINES PREVIOUSLY INSTALLED BY OTHERS.

ALL WIRING TO BE DONE BY OTHERS

PENDENT SPRINKLER HEADS TO BE INSTALLED CENTERLINE OF ACOUSTICAL CEILING TILES.

SPRINKLER SYSTEM INSTALLATION TO COMPLY WITH NFPA PAMPHLET # 13.

ALL DIMENSIONS ARE SHOWN FOR GENERAL LOCATION OF SPRINKLER HEADS ; PIPING MAY VARY TO SUIT ACTUAL FIELD CONDITIONS.

ACOUSTICAL CEILING TILE (ACT) TO BE LISTED NON-COMBUSTIBLE WITH UL FLAME SPREAD OF LESS THAN 25.

OCCUPANCY DESCRIPTION AND CLASSIFICATION:
OFFICES, BATHROOMS, EXAM ROOMS : LIGHT HAZARD

OFG INDICATES OUTSIDE FACE OF GIRT.

⬡ = INDICATES HYDRAULIC REFERENCE POINTS.

F.F. ℄ INDICATES FINISH FLOOR UP TO CENTERLINE OF PIPE.

D ℄ INDICATES DECK DOWN TO CENTERLINE OF PIPE.

INDICATES EXISTING SPRINKLER PIPE
INDICATES NEW SPRINKLER PIPE

WATER DATA

STATIC : 112 PSI
RESIDUAL: 108 PSI
FLOW : 2846 GPM
ELEVATION: 100.0'
DATE: 6/22/2006
TIME: N/A

INFORMATION PROVIDED BY : PORTLAND WATER DISTRICT

NOTE: UNDERGROUND PREVIOUSLY INSTALLED BY OTHERS. EASTERN FIRE PROTECTION TO START AT EXISTING MAINS AND LINES INSIDE BUILDING.

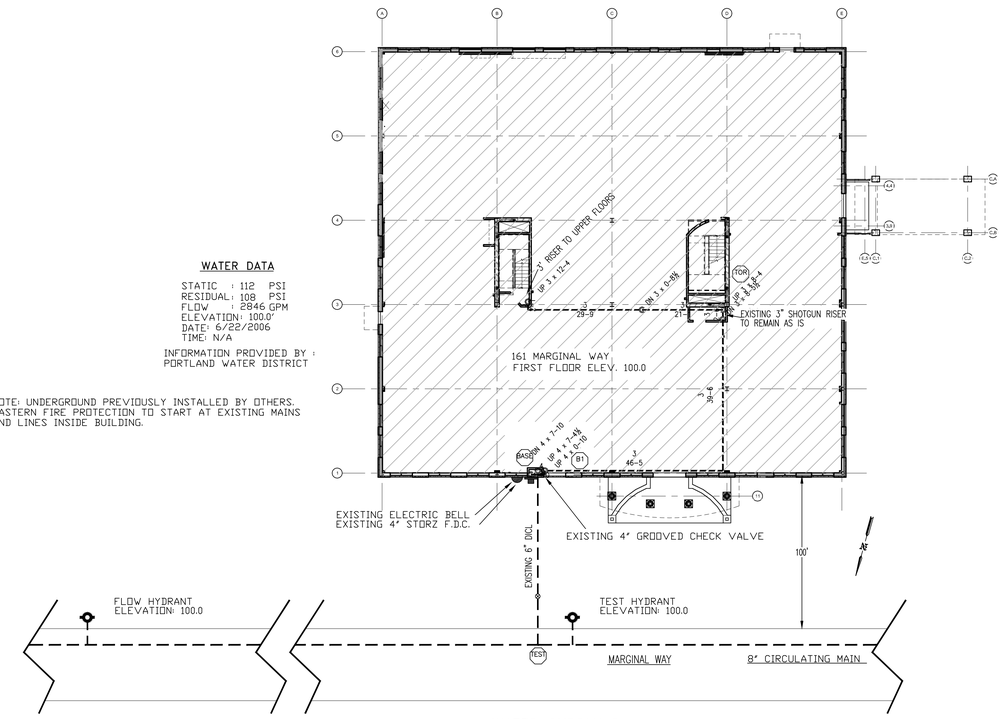

WATER SUPPLY PLAN

SCALE: N.T.S.

GENERAL NOTES	DATE	REVISIONS	REQUIRED APPROVALS			
SPRINKLER SYSTEM RENOVATION TO COMPLY WITH NFPA PAMPHLET # 13			OWNER / ARCHITECT	PORTLAND GASTROENTEROLOGY		FIRE SPRINKLER PLANS & DETAILS
NEW BRANCH LINE PIPING TO BE BLACK SCHEDULE 40 JOINED BY THREADED DUCTILE IRON FITTINGS			STATE FIRE MARSHAL	161 MARGINAL WAY, PORTLAND, ME.		DWG. NO. 1 OF 2
NEW MAIN PIPING TO BE SCHEDULE # 10 BLACK WITH GROOVED ENDS & WELDED OUTLETS JOINED BY MECHANICAL COUPLINGS			PORTLAND FIRE DEPARTMENT	CONTRACT WITH: HEBERT CONSTRUCTION		JOB NUMBER AN-5458-16
OWNER TO PROVIDE SUFFICIENT HEAT THROUGHOUT BUILDING TO PREVENT FREEZING OF WATER FILLED SPRINKLER PIPING AND EQUIPMENT. (40° F)			DRAWN BY WAF NICET LEVEL III CERT.# 095574	EASTERN FIRE PROTECTION AUBURN/LEWISTON INDUSTRIAL AIRPARK, AUBURN, MAINE 04210		SCALE AS NOTED
			CHECKED BY JWD NICET LEVEL III CERT.# 116803			DATE 05/27/16
			CONTRACTOR LICENSE # 101			
			CONTRACTOR RMS # 368			