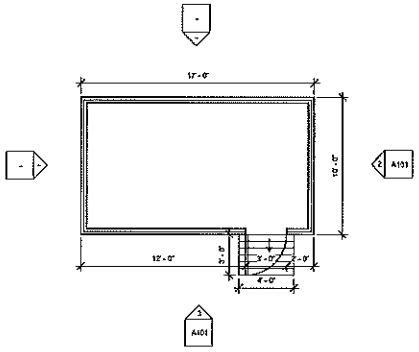

① Floor level
1/4" = 1'-0"

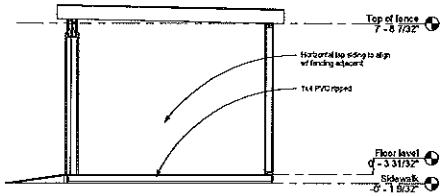

② East
3/8" = 1'-0"

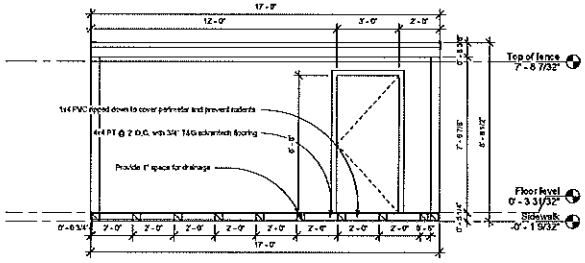

③ South
3/8" = 1'-0"

Autodesk Revit

www.autodesk.com/revit

Consultant
Address
Address
Phone
Fax
e-mail

Consultant
Address
Address
Phone
Fax
e-mail

Consultant
Address
Address
Phone
Fax
e-mail

Consultant
Address
Address
Phone
Fax
e-mail

Consultant
Address
Address
Phone
Fax
e-mail

No.	Description	Date

Bruce Kistler
Owner Shed
Plans

Project number	Project Number
Date	Issue Date
Drawn by	Author
Checked by	Checker

A101

Scale	As indicated

6/12/2017 10:01:17 AM