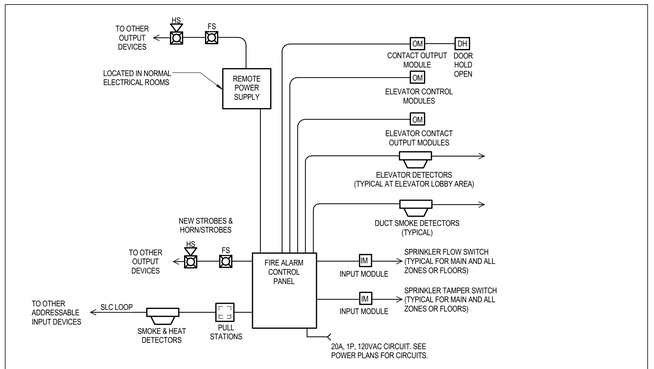

FIRE ALARM NOTES:

1. REFER TO FLOOR PLANS FOR EXACT LOCATIONS AND QUANTITIES OF DEVICES.
2. QUANTITY OF AUDIO/VISUAL SIGNALING CIRCUITS SHALL BE PER MANUFACTURER'S REQUIREMENTS. EACH CIRCUIT SHALL HAVE 50% SPARE CAPACITY FOR FUTURE NOTIFICATION APPLIANCES PER SPECIFICATION.
3. ALL INSTALLATION WORK WILL BE DONE IN ACCORDANCE WITH FIRE ALARM MANUFACTURER'S INSTRUCTIONS, RECOMMENDATIONS, AND APPROVED WIRING SCHEMATIC.
4. CORRIDOR AUDIO/VISUAL (STROBE) NOTIFICATION DEVICES SHALL BE SYNCHRONIZED AS REQUIRED.
5. MINIMUM CONDUIT SIZE SHALL BE ½" RIGID CONDUIT.
6. FIRE ALARM SYSTEM MUST COMPLY WITH CITY AND STATE MAINE AND CITY OF PORTLAND REQUIREMENTS AND STANDARDS. COORDINATE WITH LOCAL FIRE DEPARTMENT AND CITY.
7. ALL CIRCUITS SHALL BE CLASS B LOOPS.
8. ELEVATOR PIT SHALL HAVE A SMOKE DETECTOR, AND A 135DEG. HEAT DETECTOR, THE HEAT DETECTOR SHALL BE LESS THAN 2' FROM SPRINKLER HEAD.
9. ELEVATOR CONTROL PANEL, AND TOP OF HOISTWAY SHALL HAVE A SMOKE DETECTOR, AND THE HEAT DETECTOR SHALL BE LESS THAN 2' FROM SPRINKLER HEAD.
10. COORDINATE EXACT QUANTITY AND LOCATION OF FIRE PROTECTION DEVICES WITH FIRE PROTECTION CONTRACTOR.
11. PROVIDE SEPARATE MULTIPLEX LOOP INITIATING CIRCUIT PER FLOOR. PROVIDE SEPARATE 24V POWER CIRCUIT FOR CONTROL ADDRESSABLE MODULES PER MANUFACTURER'S REQUIREMENTS.
12. REFER TO DETAIL ELEVATOR DEVICES & WIRING DIAGRAM.
13. REFER TO SPECIFICATIONS FOR ATC CONNECTION TO SHUT DOWN HVAC EQUIPMENT.
14. CONTRACTOR TO EXTEND WIRING FROM CONTROL ADDRESSABLE MODULE TO ELEVATOR CONTROLLER. COORDINATE WITH ELEVATOR VENDOR FOR FINAL CONNECTIONS (TYPICAL).

FA FIRE ALARM SYSTEM RISER
NOT TO SCALE

CONTROL ZONES:
1. WAITING ROOM : FLOOR 3.
2. WAITING ROOM : FLOOR 4
3. PROCEDURE ROOM 1
4. PROCEDURE ROOM 2
5. PROCEDURE ROOM 3
6. PROCEDURE ROOM 4
7. PROCEDURE ROOM 5
8. PROCEDURE ROOM 6

UTILIZE BOSE FREESPACE 3 WITH CEILING MOUNTED SUBWOOFER AND 2 SATELLITE SPEAKERS IN EACH PROCEDURE ROOM. PAINT WITH ANTIMICROBIAL PAINT. CONNECT TO MULTI-ROOM AUDIO SYSTEM, WITH WIRELESS ACCESS AND SYSTEM SIMILAR TO AUTONOMIC MIRAGE SYSTEM WITH KEYPADS.

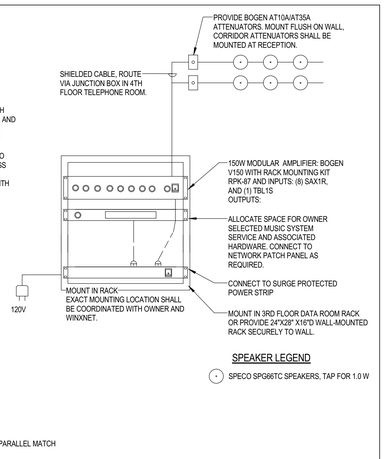

SPEAKER LEGEND

SPECO SPG66TC SPEAKERS, TAP FOR 1.0 W

NOTE:
SPEAKERS ARE CONNECTED IN PARALLEL MATCH PHASING.

MS MUSIC SYSTEM RISER DIAGRAM
NOT TO SCALE

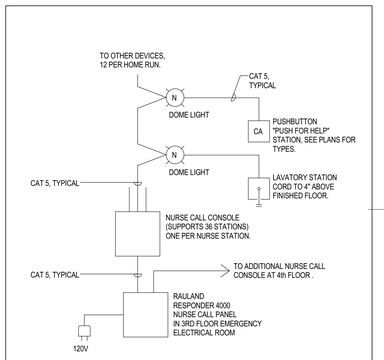

CP NURSE CALL SYSTEM RISER
NOT TO SCALE

CONTROL ZONES:
1. LEVEL 3 OPEN WORK 380.
2. LEVEL 3 OPEN WORK 320 AND 301
3. SCHEDULING & IT/REC 315 & CALL CENTER 314
4. _____
5. _____
6. _____

CHANNEL NUMBERS ARE ASSIGNED AUTOMATICALLY IN SEQUENCE. E.G. ZONE 1 - RUN 1: A-B-C-D, ZONE 1 RUN 2: C-D-A-B, C-D-A-B. LOCATE EMITTERS SUCH THAT SIMILAR CHANNELS SHALL NOT BE ADJACENT OR PERPENDICULAR FROM ONE ANOTHER, BUT MAY BE DIAGONAL. UTILIZE A SERPENTINE WIRING PATTERN TO AVOID CHANNEL INTERFERENCE.

EMITTER LEGEND

SM CAMBRIDGE SOUND MANAGEMENT: E-A-W-16

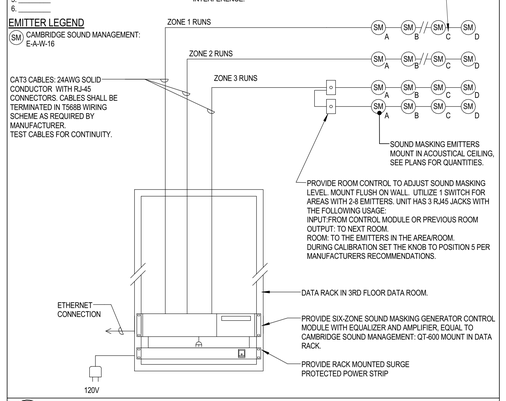

SM SOUND MASKING SYSTEM RISER DIAGRAM
NOT TO SCALE

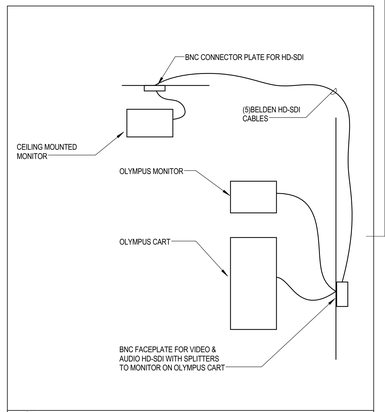

OPV PROC. ROOM OLYMPUS VIDEO CONNECTIONS
NOT TO SCALE

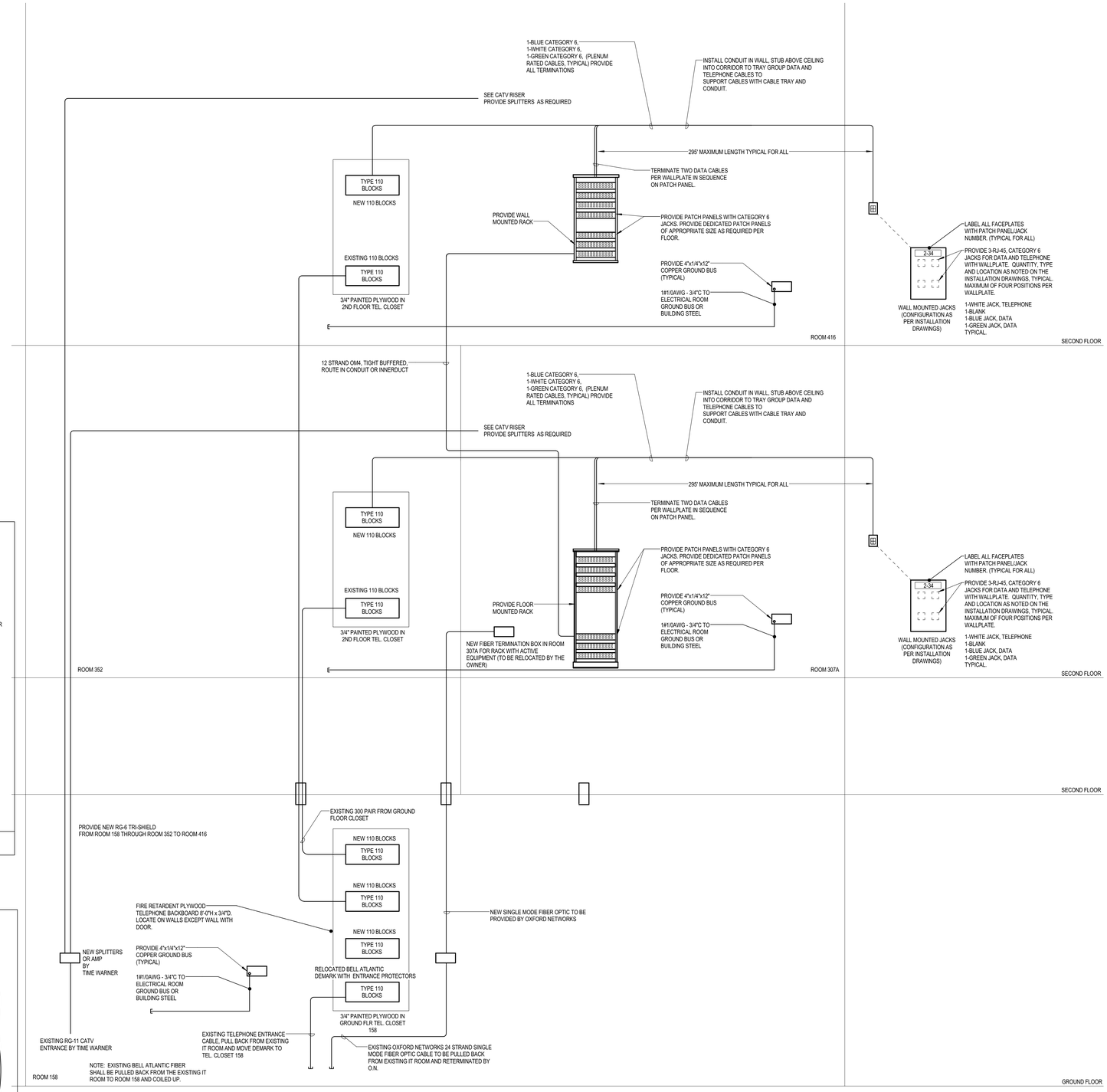

DIMENSIONS PROVIDED FOR INFORMATION ONLY.
PROVIDE CLEARANCE FOR FRONT AND BACK OF RACK; RACK IS 15" DEEP.

TELECOMMUNICATIONS RISER
N.T.S

Stantec
Stantec Consulting Services Inc.
482 Payne Road Scarborough Court
Scarborough, ME 04074-8929
Tel: (207) 883-3355 / Fax: (207) 883-3376
www.stantec.com

Reviewed for Code Compliance Inspections Division Approved with Conditions
Date: 05/03/16

ARCHITECTS
49 DARTMOUTH STREET
PORTLAND, MAINE 04101
207-775-1059
www.pdtarchs.com

COPYRIGHT 2016
PDT Architects
Reuse or reproduction of the contents of this document is not permitted without written permission of PDT Architects.

PORTLAND GASTROENTEROLOGY CENTER
161 Marginal Way - Portland, Maine 04101

No.	Date	Description
		Revision Schedule

STATE OF MAINE RICHARD A. NADEAU No. 10013 LICENSED PROFESSIONAL ENGINEER 3/18/2016

JOB NO. 195210852

DRWN. CHK
Author Checker

SCALE:

ISSUE
PERMIT SET
3/18/2016

TITLE
ELECTRICAL SYSTEMS RISERS

SHEET
E004