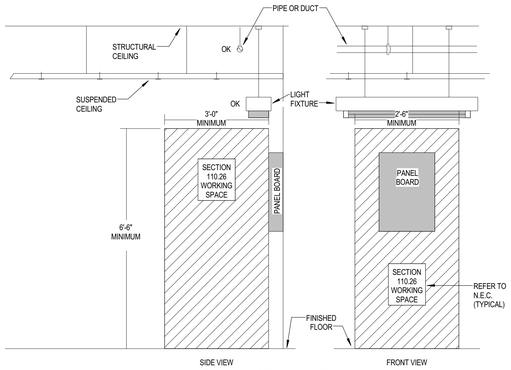

WORKING SPACE REQUIREMENTS

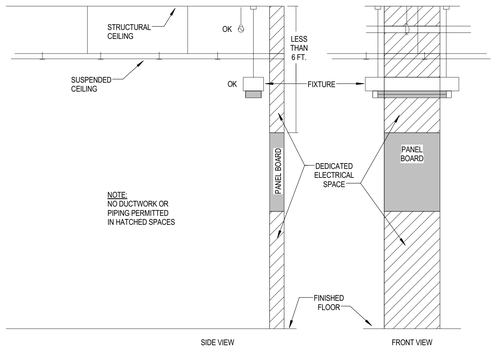

DEDICATED ELECTRICAL SPACE REQUIREMENTS

CLEARANCES AT ELECTRICAL PANELS N.T.S.

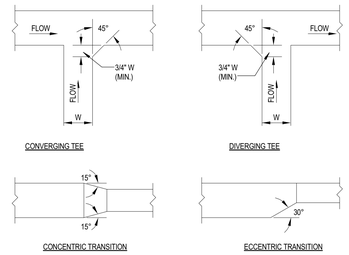

DUCT TRANSITIONS N.T.S.

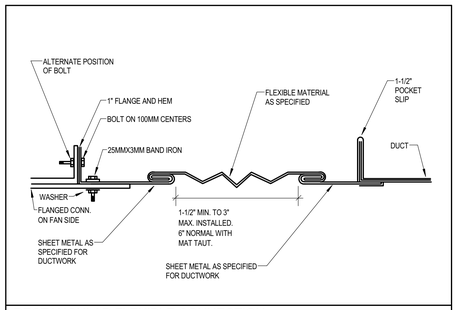

RECTANGULAR FLEXIBLE CONNECTION N.T.S.

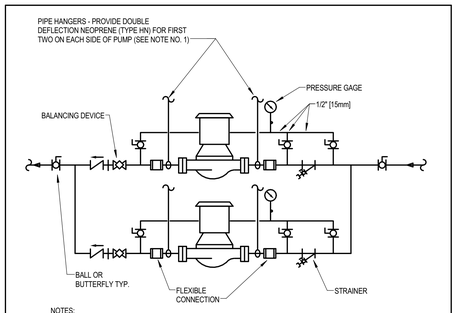

NOTES:

1. SUPPORT PUMP FROM PIPING ONLY. DO NOT SUPPORT PUMP FROM MOTOR.

IN-LINE PUMPS - CONNECTIONS N.T.S.

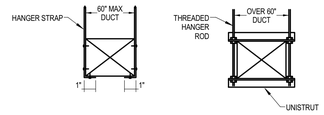

NOTES:
1. SIZE & RATING OF HANGERS & SUPPORTS SHALL BE PER LATEST "SMACNA" STANDARDS.

DUCT SUPPORT ATTACHMENT N.T.S.

FIRE AND SMOKE DAMPER INSTALLATION

1. THE FIRE WALL OPENING SHALL BE A MINIMUM OF 1/8" PER FOOT LARGER THAN THE OVERALL SIZE OF THE DAMPER AND SLEEVE ASSEMBLY. THE MAXIMUM OPENING SIZE SHALL NOT EXCEED 1/8" PER FOOT PLUS 1". NOR SHALL THE OPENING BE LESS THAN 1/4" LARGER THAN ANY SIZE DAMPER AND SLEEVE ASSEMBLY.
2. SLEEVE GAUGE SHALL BE EQUAL TO OR HEAVIER THAN THE GAUGE OF THE DUCT WHEN ONE OR MORE OF THE FOLLOWING BREAKAWAY DUCT CONNECTION ARE USED, PLAIN S-SLIP, HEMMED S-SLIP, STANDING S-SLIP, REINFORCED STANDING S-SLIP, INSIDE SLIPJOINT AND DOUBLE S-SLIP. THE DAMPER IS FASTENED TO THE SLEEVE WITH 1/2" WELDS SPACED 8" CENTER TO CENTER AND A MAXIMUM OF 2" FROM DAMPER CORNER. IF OTHER DUCT SLEEVE CONNECTION ARE USED, THE SLEEVE SHALL BE A MINIMUM OF 16 GAUGE.
3. MOUNTING ANGLES SHALL BE 1-1/2"x1-1/2"x16 GAUGE MINIMUM AND FASTENED WITH NO. 10 BOLTS OR SCREWS, 3/16" DIAMETER STEEL RIVETS OR 1/2" LONG TACK WELDS. SPACE FASTENERS 8" ON CENTER.
4. DAMPER SLEEVE SHALL NOT EXTEND MORE THAN 6" BEYOND THE FIRE WALL OR PARTITION AND NO MORE THAN 9" ON THE OPERATOR/ACTUATOR SIDE.
5. DAMPER MUST BE INSTALLED SO THAT IT IS SQUARE AND FREE FROM RACKING. DO NOT COMPRESS OR STRETCH THE DAMPER FRAME INTO THE DUCT OR OPENING.
6. INSTALL DAMPER IN STRICT COMPLIANCE WITH MANUFACTURER'S INSTRUCTIONS, NFPA 90 AND SMACNA.

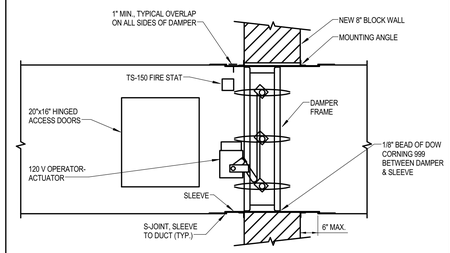

COMBINATION FIRE & SMOKE DAMPER-FSD (WALL) N.T.S.

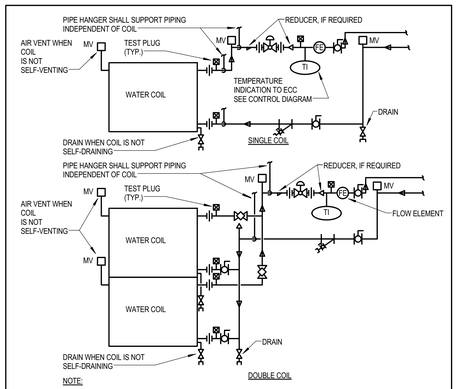

NOTE:

1. WHEN COIL IS INCLUDED IN CASING MOUNTED ON VIBRATION ISOLATORS THE FIRST 2 HANGERS FOR EACH PIPE SHALL BE SPRING & NEOPRENE TYPE. TYPE "H" FOR 4" [100mm] PIPE & SMALLER. TYPE "H-P" FOR 5" [125mm] PIPE & LARGER.
2. PIPING SHALL BE INSTALLED IN SUCH MANNER THAT IT WILL NOT BLOCK THE SWING OR USE OF ACCESS DOORS OR PANELS; NEITHER SHALL IT BLOCK THE SERVICING OF FILTERS, VALES, OR EQUIPMENT.
3. THE FLOW ELEMENT MAY BE INSTALLED IN THE SUPPLY PIPING IF THE REQUIRED MINIMUM UPSTREAM AND DOWNSTREAM DIMENSIONS CANNOT BE OBTAINED IN THE RETURN PIPING.

WATER COILS - PIPING CONNECTIONS N.T.S.

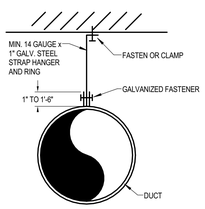

NOTE: FOR DUCTS UP TO AND INCLUDING 16"

ROUND DUCT HANGER N.T.S.

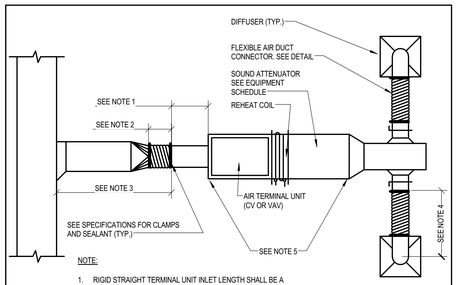

NOTE:

1. RIGID STRAIGHT TERMINAL UNIT INLET LENGTH SHALL BE A MINIMUM OF 3 TIMES THE DIAMETER OF INLET
2. A FLEXIBLE AIR DUCT CONNECTOR IS NOT MANDATORY FOR INLET TO THIS BOX, BUT ALLOWED TO ACCOMMODATE MINOR OFFSETS. MAXIMUM LENGTH 3'-0" [900mm].

   A BRANCH DUCT SERVING AN INDIVIDUAL BOX MAY BE THE SAME SIZE AS THE BOX
3. INLET, PROVIDED THE EQUIVALENT LENGTH OF THE BRANCH DUCT, AS SHOWN, DOES NOT EXCEED 10 FEET (3 METERS). FOR LONGER LENGTHS, INCREASE THE DUCT SIZE AND PROVIDE A DUCT TRANSITION TO MAINTAIN THE DUCT STATIC PRESSURE DROP AT OR BELOW 0.2"/100' [1.64Pa/m].
4. FLEXIBLE AIR DUCT CONNECTORS, WHEN USED FROM TERMINAL UNIT SUPPLY AIR DUCT TO DIFFUSER, SHALL NOT EXCEED 6'-0" [1500mm]. USE RIGID ELBOWS FOR CHANGE OF DIRECTION GREATER THAN 45°.

   COMPONENT ARRANGEMENT MAY VARY BY MANUFACTURER. PROVIDE
5. INSULATION W/VAPOR BARRIER FOR CONNECTING DUCT SECTIONS.

   USE OF THE FLEXIBLE AIR DUCT CONNECTORS ARE NOT PERMITTED FOR THE
6. DEDICATED AHU SERVING THE SURGICAL SUITE.

DUCT CONNECTIONS - AIR TERMINAL UNITS N.T.S.

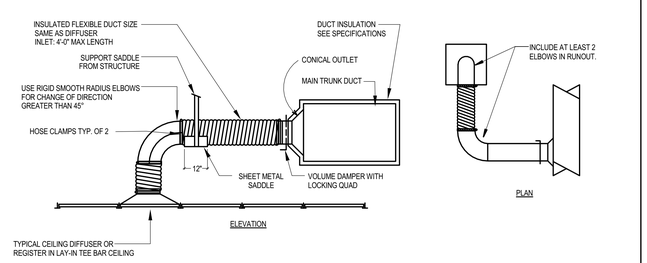

NOTE:
SEE SPECIFICTIONS FOR CLAMPS AND SEALANT (TYP.)

FLEXIBLE CONNECTION TO DIFFUSER DETAIL N.T.S.

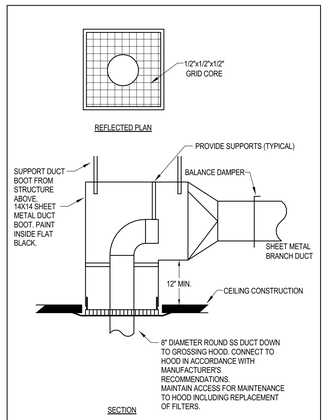

CEILING MOUNTED EXHAUST THIMBLE N.T.S.

NOTES:

1. HANGER AND SADDLE MATERIALS TO MATCH PIPE MATERIALS. SIZE AND GAUGE OF INSULATION SHIELD SHALL BE PER THE INSULATION SHIELD MANUFACTURER'S RECOMMENDATION
2. HANGER DIMENSIONS SHALL SUIT INSULATED PIPE SIZES TO ALLOW FREE MOVEMENT WITHOUT BINDING.
3. PIPE HANGERS FOR COLD PIPES MAY BE THE SAME SIZE AS THE PIPE WITH INSULATION WRAPPED AROUND THE HANGER.

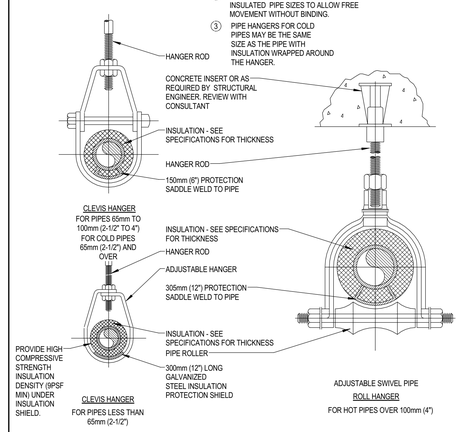

PIPE HANGER DETAILS N.T.S.

Stantec

Stantec Consulting Services Inc.
482 Payne Road Scarborough Court
Scarborough, ME 04074-8929
Tel: (207) 883-3355 / Fax: (207) 883-3376
www.stantec.com

Reviewed for Code Compliance
Fire Prevention Division
Approved with Conditions
Date: 05/03/16

ARCHITECTS
49 DARTMOUTH STREET
PORTLAND, MAINE 04101
207-775-1059
www.pdtarchs.com

COPYRIGHT 2016
PDT Architects
Reuse or reproduction of the contents of this document is not permitted without written permission of PDT Architects.

PORTLAND GASTROENTEROLOGY CENTER

161 Marginal Way - Portland, Maine 04101

No.	Date	Description
		Revision Schedule

STATE OF MAINE
CHRISTOPHER M. PIIK
No. 11895
3-18-2016
LICENSED PROFESSIONAL ENGINEER

JOB NO. 195210852

DRWN. CHK
ERD CMP

SCALE:

ISSUE
PERMIT SET
3/18/2016

TITLE
HVAC DETAILS

SHEET
M501