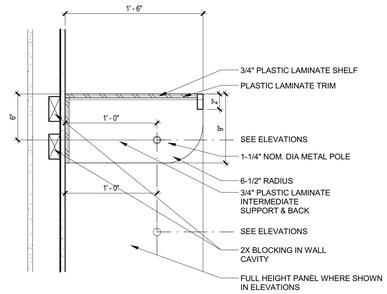

12 TYP. COAT ROD AND SHELVE
1 1/2" = 1'-0"

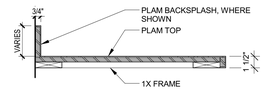

9 TYPICAL PLAM COUNTER
1 1/2" = 1'-0"

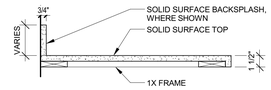

8 TYPICAL SOLID SURFACE COUNTERTOP
1 1/2" = 1'-0"

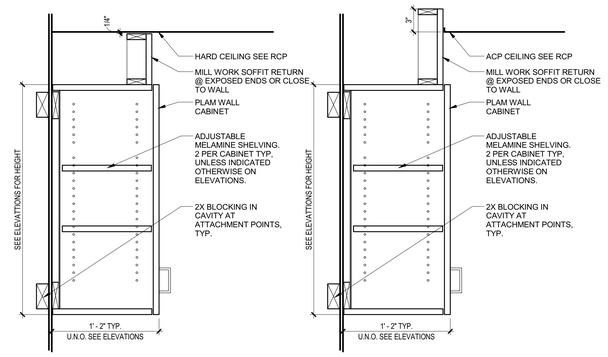

10 UPPER CABINET
1 1/2" = 1'-0"

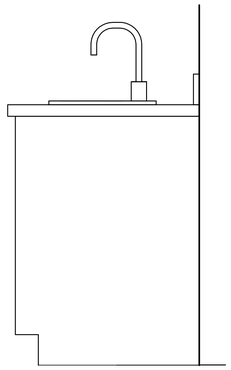

15 ADA CABINET DOORS
1 1/2" = 1'-0"

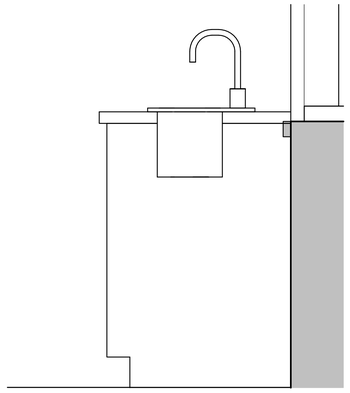

14 Detail 3
1 1/2" = 1'-0"

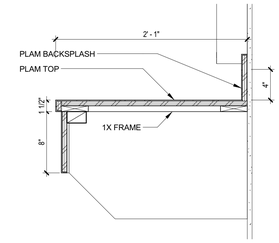

13 TYPICAL EXAM ROOM COUNTER
1 1/2" = 1'-0"

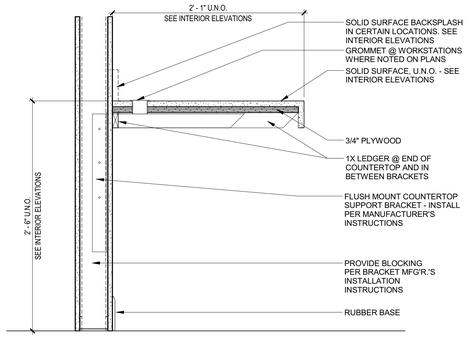

7 TYPICAL COUNTER
1 1/2" = 1'-0"

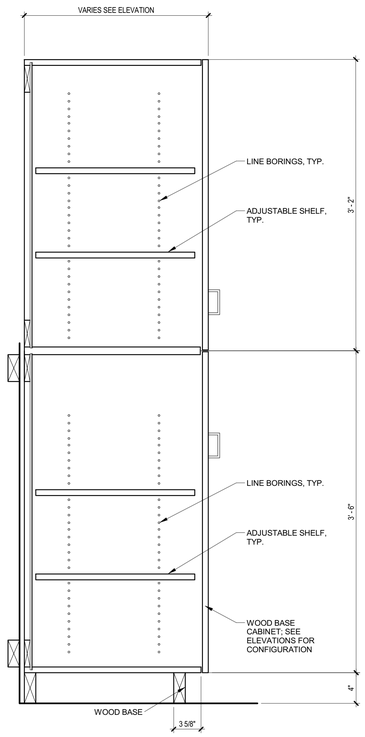

2 FULL HEIGHT CABINET
1 1/2" = 1'-0"

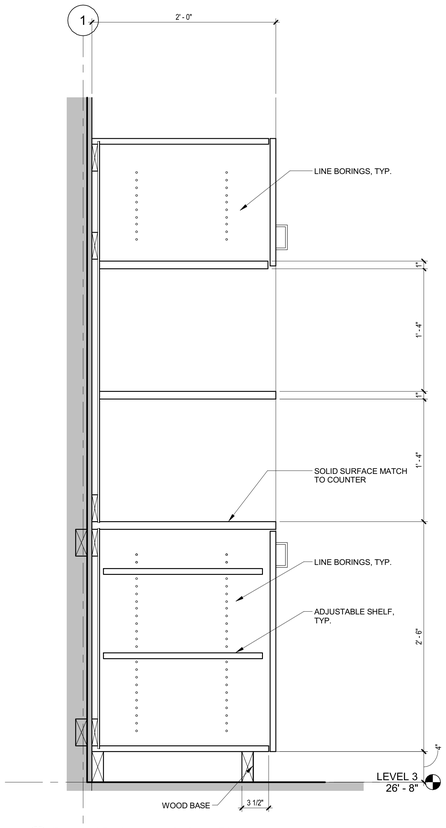

11 TALL CASEWORK W/ MICROWAVES
1 1/2" = 1'-0"

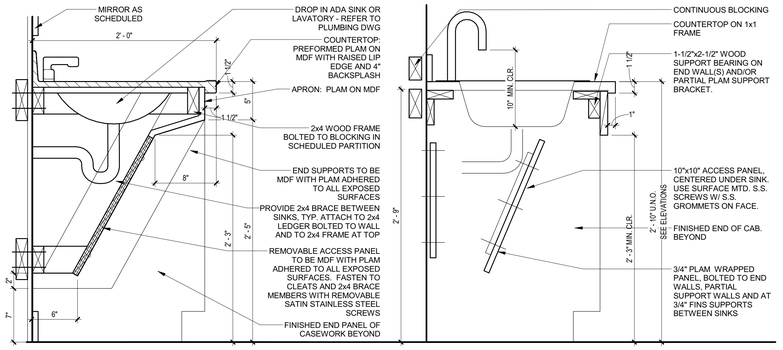

5 ACCESSIBLE SINK DETAIL
1 1/2" = 1'-0"

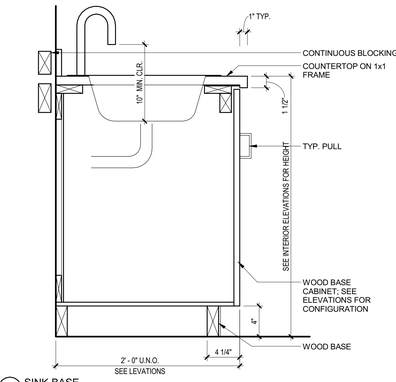

6 SINK BASE
1 1/2" = 1'-0"

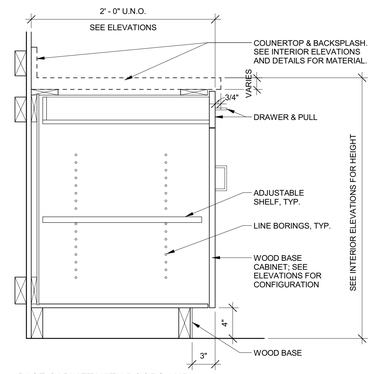

4 BASE CABINET WITH DOORS AND DRAWER
1 1/2" = 1'-0"

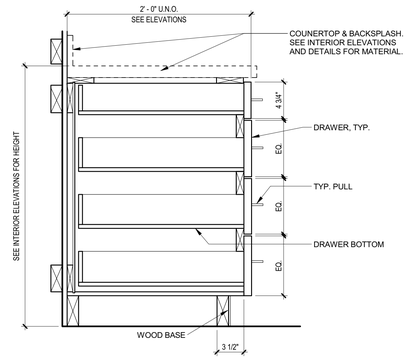

3 BASE CABINET WITH DRAWERS
1 1/2" = 1'-0"

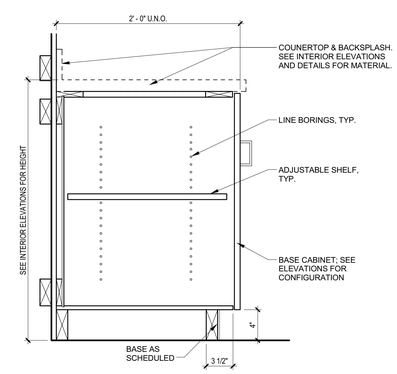

1 BASE CABINET
1 1/2" = 1'-0"

3/18/2016 5:27:54 PM

ARCHITECTS
49 DARTMOUTH STREET
PORTLAND, MAINE 04101
207-775-1059
www.pdtarchs.com

Reviewed for Code Compliance
Inspections Division
Approved with Conditions
Date: 05/03/16

COPYRIGHT 2016
PDT Architects
Reuse or reproduction of the contents of this document is not permitted without written permission of PDT Architects.

PORTLAND GASTROENTEROLOGY CENTER

161 Marginal Way Portland, Maine

No.	Date	Description
Revision Schedule		

REGISTERED ARCHITECT ANN M. FONTAINE-FISHER NO.1439 STATE OF MAINE

JOB NO. 14054

DRWN. CHK
Checker

SCALE:

ISSUE
PERMIT SET
03/18/16

TITLE
CASEWORK DETAILS

SHEET
A700