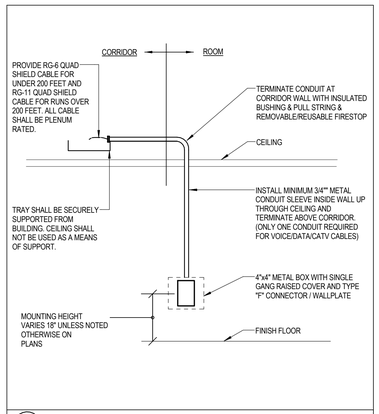

TV **CABLE TV OUTLET DETAIL**
NOT TO SCALE

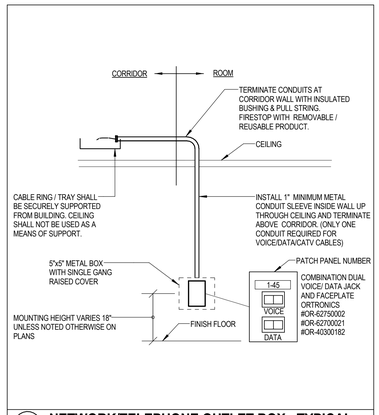

TD **NETWORK/TELEPHONE OUTLET BOX - TYPICAL**
NOT TO SCALE

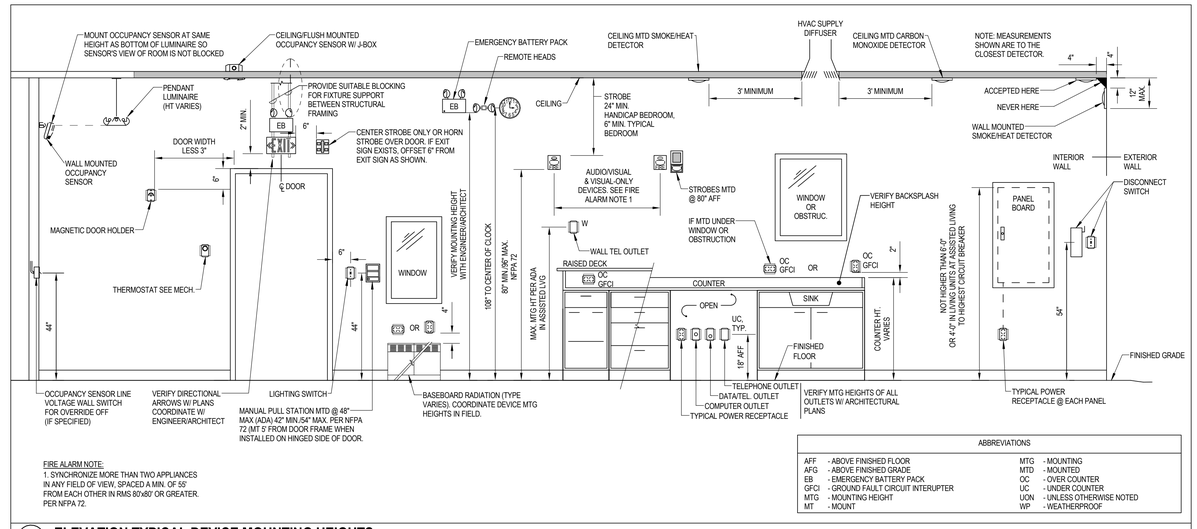

FIRE ALARM NOTE:
1. SYNCHRONIZE MORE THAN TWO APPLIANCES IN ANY FIELD OF VIEW, SPACED A MIN. OF 55' FROM EACH OTHER IN RMS 80'x80' OR GREATER. PER NFPA 72.

ABBREVIATIONS

AFF	- ABOVE FINISHED FLOOR	MTG	- MOUNTING
AFG	- ABOVE FINISHED GRADE	MTD	- MOUNTED
EB	- EMERGENCY BATTERY PACK	OC	- OVER COUNTER
GFCI	- GROUND FAULT CIRCUIT INTERUPTER	UC	- UNDER COUNTER
MTG	- MOUNTING HEIGHT	UON	- UNLESS OTHERWISE NOTED
MT	- MOUNT	WP	- WEATHERPROOF

HT **ELEVATION TYPICAL DEVICE MOUNTING HEIGHTS**
NOT TO SCALE (Not all devices may be used.)

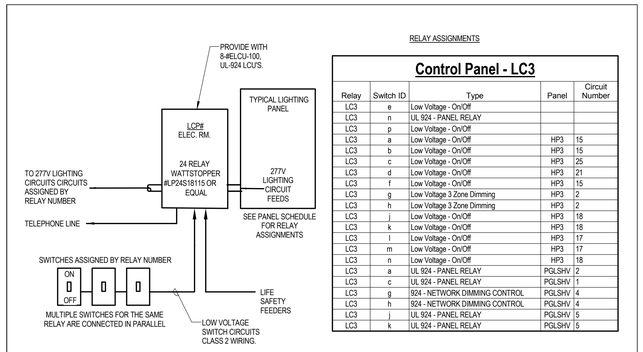

RELAY ASSIGNMENTS

Control Panel - LC3

Relay	Switch ID	Type	Panel	Circuit Number
LC3	e	Low Voltage - On/Off		
LC3	n	UL 924 - PANEL RELAY		
LC3	p	Low Voltage - On/Off		
LC3	a	Low Voltage - On/Off	HP3	15
LC3	b	Low Voltage - On/Off	HP3	15
LC3	c	Low Voltage - On/Off	HP3	25
LC3	d	Low Voltage - On/Off	HP3	21
LC3	f	Low Voltage - On/Off	HP3	15
LC3	g	Low Voltage 3 Zone Dimming	HP3	2
LC3	h	Low Voltage 3 Zone Dimming	HP3	2
LC3	j	Low Voltage - On/Off	HP3	18
LC3	k	Low Voltage - On/Off	HP3	18
LC3	l	Low Voltage - On/Off	HP3	17
LC3	m	Low Voltage - On/Off	HP3	17
LC3	n	Low Voltage - On/Off	HP3	18
LC3	a	UL 924 - PANEL RELAY	PGLSHV	2
LC3	c	UL 924 - PANEL RELAY	PGLSHV	1
LC3	g	924 - NETWORK DIMMING CONTROL	PGLSHV	4
LC3	h	924 - NETWORK DIMMING CONTROL	PGLSHV	4
LC3	j	UL 924 - PANEL RELAY	PGLSHV	5
LC3	k	UL 924 - PANEL RELAY	PGLSHV	5

LCP **LIGHTING CONTROL PANEL CONNECTION DETAIL**
NOT TO SCALE

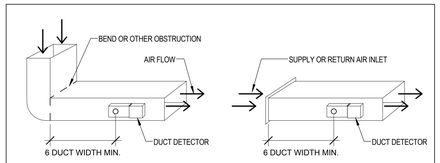

1. DUCT SMOKE DETECTORS: COMPLY WITH NFPA 72 AND NFPA 90A. INSTALL SAMPLING TUBES SO THEY EXTEND THE FULL WIDTH OF DUCT.

2. PLACE DUCT SMOKE DETECTORS PER MANUFACTURER'S INSTRUCTIONS. DUCT SMOKE DETECTORS LOCATIONS SHALL BE ACCESIBLE FOR MANTAINCE.

A. DUCT SMOKE DETECTOR ASSEMBLIES MOUNTED WITHIN THE DUCT SHOULD BE LOCATED ON THE SIDES OR TOP OF A DUCT.
B. DUCT SMOKE DETECTORS MOUNTED IN AN ENCLOSURE WITH SAMPLING TUBES CAN BE INSTALLED ONTO ANY WALL OF THE DUCT UNLESS OTHERWISE RESTRICTED BY THE MANUFACTURER'S INSTRUCTIONS.

3. AFTER INSTALLATION VERIFY THAT THERE IS AIR FLOW THROUGH THE DUCT SMOKE DETECTOR. (THIS IS ACCOMPLISHED BY MEASURING THE STATIC PRESSURE DIFFERENCE BETWEEN THE INLET AND OUTLET TUBES USING A MANOMETER AS ILLUSTRATED IN THE INSTRUMENT SECTION OF THIS MANUAL.) RELOCATE THE DUCT SMOKE DETECTOR IF THE PRESSURE DIFFERENTIAL SPECIFIED BY THE MANUFACTURER CANNOT BE ATTAINED AFTER CHECKING ALL POSSIBLE FAULT CAUSING PROBLEMS.

4. PRIOR TO COMPLETING THE INSTALLATION, CLEAN THE DUCT ENCLOSURE, AND CHECK INDICATORS FOR HOLE ORIENTATION.

DD **TYPICAL DUCT SMOKE DETECTOR PLACEMENT**
NOT TO SCALE

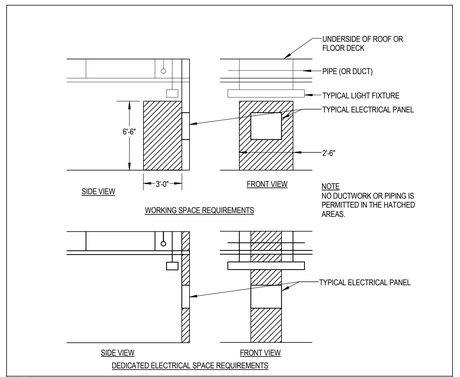

ELV **CLEARANCES AT ELECTRICAL PANELS**
NOT TO SCALE

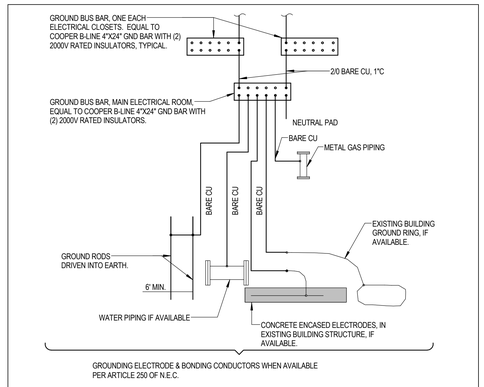

GR **TYPICAL GROUNDING ELECTRODE SYSTEM DETAIL**
NOT TO SCALE

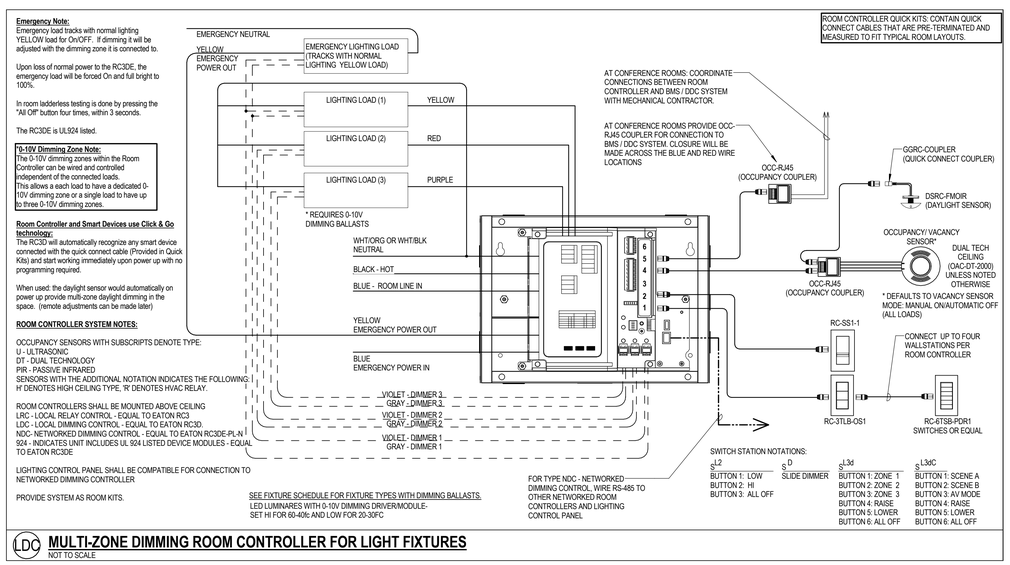

Emergency Note:
Emergency load tracks with normal lighting YELLOW load for On/OFF. If dimming it will be adjusted with the dimming zone it is connected to.

Upon loss of normal power to the RC3DE, the emergency load will be forced On and full bright to 100%.

In room ladderless testing is done by pressing the "All Off" button four times, within 3 seconds.

The RC3DE is UL924 listed.

"0-10V Dimming Zone Note:
The 0-10V dimming zones within the Room Controller can be wired and controlled independent of the connected loads.
This allows a each load to have a dedicated 0-10V dimming zone or a single load to have up to three 0-10V dimming zones.

Room Controller and Smart Devices use Click & Go technology:
The RC3D will automatically recognize any smart device connected with the quick connect cable (Provided in Quick Kits) and start working immediately upon power up with no programming required.

When used: the daylight sensor would automatically on power up provide multi-zone daylight dimming in the space. (remote adjustments can be made later)

ROOM CONTROLLER SYSTEM NOTES:

OCCUPANCY SENSORS WITH SUBSCRIPTS DENOTE TYPE:
U - ULTRASONIC
DT - DUAL TECHNOLOGY
PIR - PASSIVE INFRARED
SENSORS WITH THE ADDITIONAL NOTATION INDICATES THE FOLLOWING:
H' DENOTES HIGH CEILING TYPE, 'R' DENOTES HVAC RELAY.

ROOM CONTROLLERS SHALL BE MOUNTED ABOVE CEILING
LRC - LOCAL RELAY CONTROL - EQUAL TO EATON RC3
LDC - LOCAL DIMMING CONTROL - EQUAL TO EATON RC3D.
NDC- NETWORKED DIMMING CONTROL - EQUAL TO EATON RC3DE-PLN
924 - INDICATES UNIT INCLUDES UL 924 LISTED DEVICE MODULES - EQUAL TO EATON RC3DE

LIGHTING CONTROL PANEL SHALL BE COMPATIBLE FOR CONNECTION TO NETWORKED DIMMING CONTROLLER

PROVIDE SYSTEM AS ROOM KITS.

SEE FIXTURE SCHEDULE FOR FIXTURE TYPES WITH DIMMING BALLASTS.
LED LUMINARES WITH 0-10V DIMMING DRIVER/MODULE-
SET HI FOR 60-40fc AND LOW FOR 20-30FC

LDC **MULTI-ZONE DIMMING ROOM CONTROLLER FOR LIGHT FIXTURES**
NOT TO SCALE

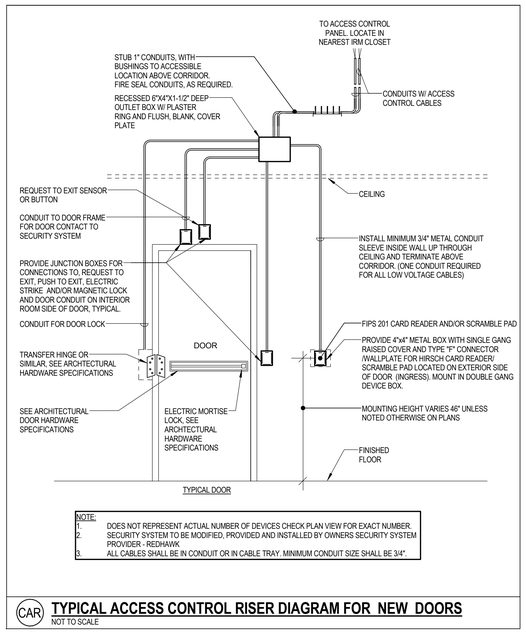

NOTE:
1. DOES NOT REPRESENT ACTUAL NUMBER OF DEVICES CHECK PLAN VIEW FOR EXACT NUMBER.
2. SECURITY SYSTEM TO BE MODIFIED, PROVIDED AND INSTALLED BY OWNERS SECURITY SYSTEM PROVIDER - REDHAWK.
3. ALL CABLES SHALL BE IN CONDUIT OR IN CABLE TRAY. MINIMUM CONDUIT SIZE SHALL BE 3/4".

CAR **TYPICAL ACCESS CONTROL RISER DIAGRAM FOR NEW DOORS**
NOT TO SCALE

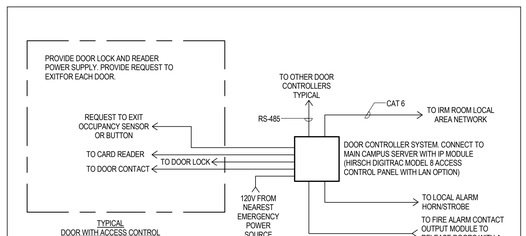

NOTES:
1. CONTROL WIRING SHALL BE PER MANUFACTURER.
2. POWER WIRING SHALL BE PER MANUFACTURER.
3. CONTRACTOR SHALL COORDINATE W/ OWNER AND 3. CONTRACTOR SHALL COORDINATE W/ OWNER AND ARCHITECT FOR INSTALLATION/LOCATION AND CONNECTION OF ACCESS CONTROL EQUIPMENT.

CA **CARD ACCESS SYSTEM RISER**
NOT TO SCALE

Stantec
Stantec Consulting Services Inc.
482 Payne Road Scarborough Court
Scarborough, ME 04074-8929
Tel: (207) 883-3355 / Fax: (207) 883-3376
www.stantec.com

PDT ARCHITECTS
49 DARTMOUTH STREET
PORTLAND, MAINE 04101
207-775-1059
www.pdtarchs.com

COPYRIGHT 2016
PDT Architects
Reuse or reproduction of the contents of this document is not permitted without written permission of PDT Architects.

PORTLAND GAST ROENTEROLOGY CENTER

161 Marginal Way - Portland, Maine 04101

No.	Date	Description
		Revision Schedule

STATE OF MAINE
RICHARD A. NACCARATO
No. 10003
LICENSED
PROFESSIONAL ENGINEER
3/18/2016

JOB NO. 195210852

DRWN. MLC | CHK Checker

SCALE:

ISSUE
PERMIT SET
3/18/2016

TITLE
ELECTRICAL DETAILS

SHEET
E501