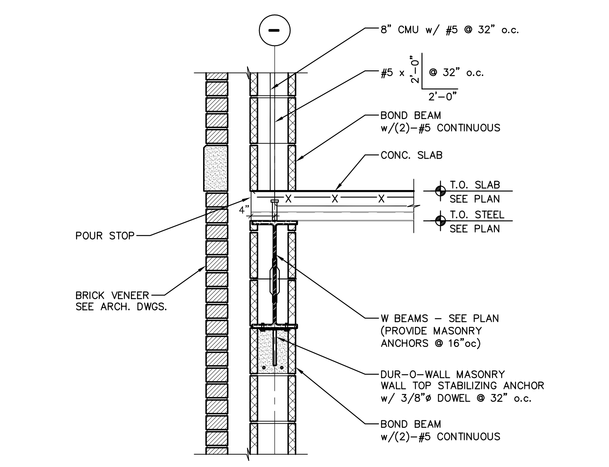

1 S2.03 **MEZZANINE FLOOR FRAMING**
SCALE: 1" = 1'-0" WSSF-319

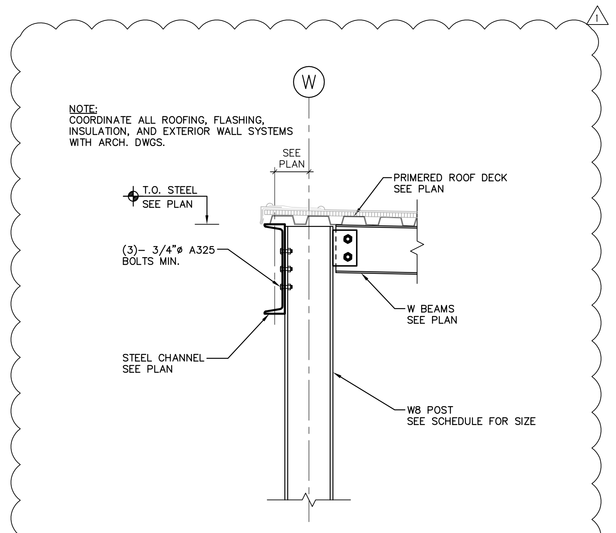

2 S2.03 **CANOPY FRAMING DETAIL**
SCALE: 1" = 1'-0" WSSR-308

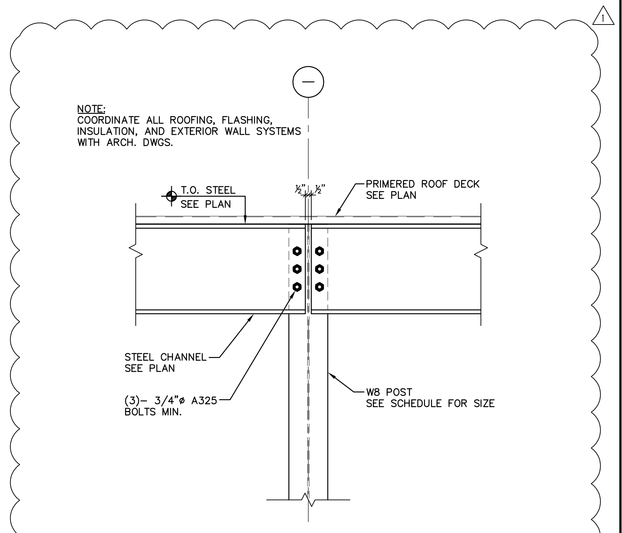

3 S2.03 **CANOPY FRAMING DETAIL**
SCALE: 1" = 1'-0" WSSR-309

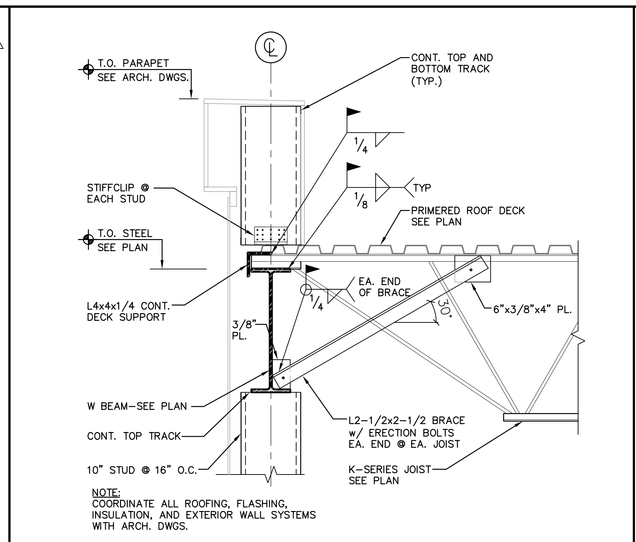

4 S2.03 **ROOF FRAMING DETAIL**
SCALE: 1" = 1'-0" WSSR-310

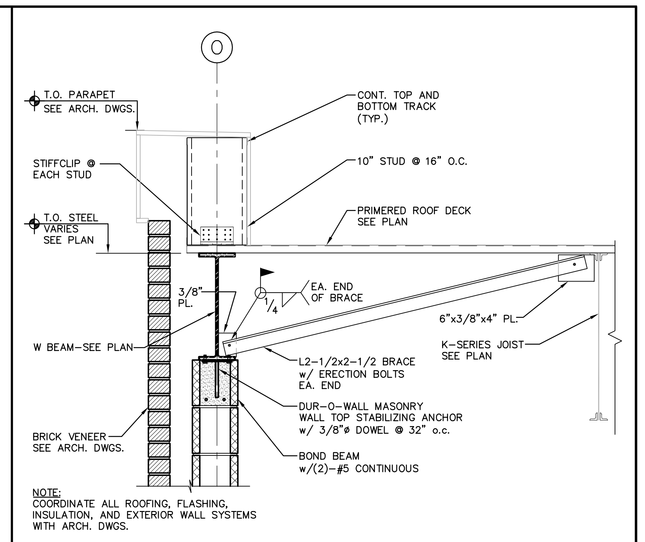

5 S2.03 **ROOF FRAMING DETAIL**
SCALE: 1" = 1'-0" WSSR-311

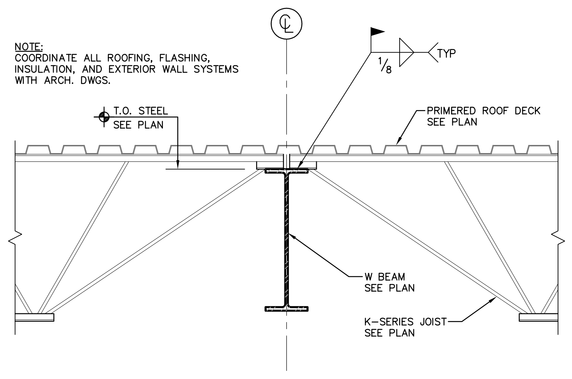

6 S2.03 **ROOF FRAMING DETAIL**
SCALE: 1" = 1'-0" WSSR-301

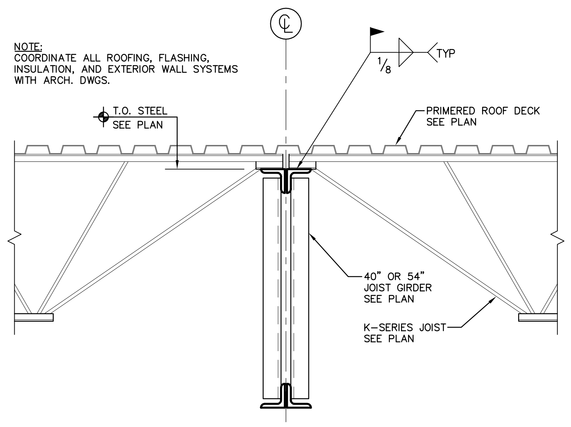

7 S2.03 **ROOF FRAMING DETAIL**
SCALE: 1" = 1'-0" WSSR-302

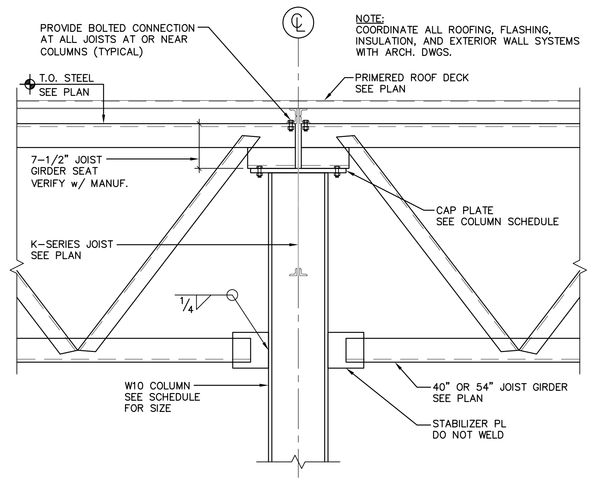

8 S2.03 **ROOF FRAMING DETAIL**
SCALE: 1" = 1'-0" WSSR-303

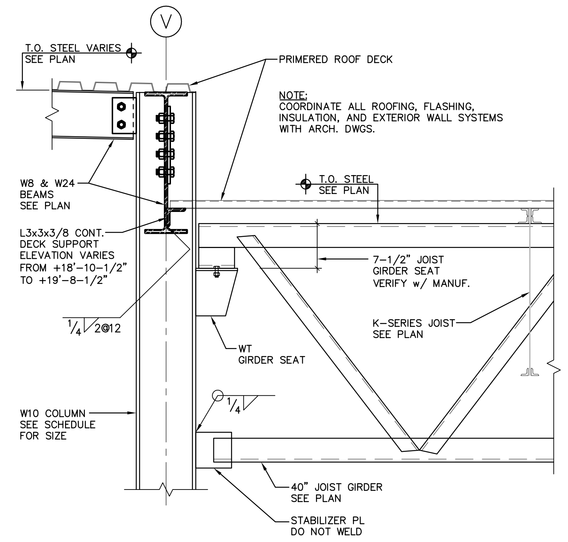

9 S2.03 **ROOF FRAMING DETAIL**
SCALE: 1" = 1'-0" WSSR-304

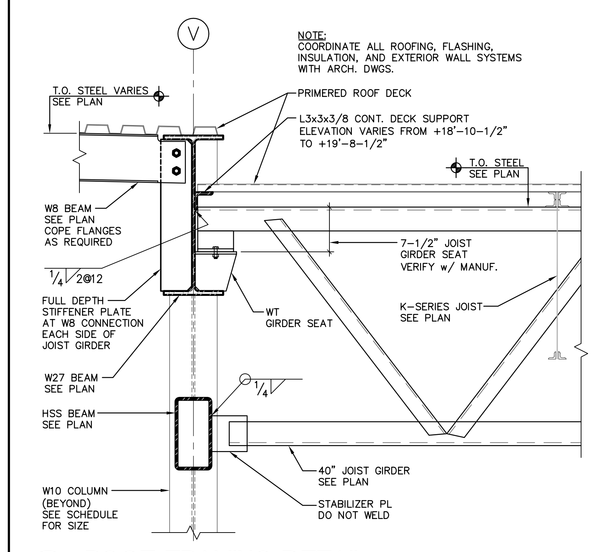

10 S2.03 **ROOF FRAMING DETAIL**
SCALE: 1" = 1'-0" WSSR-305

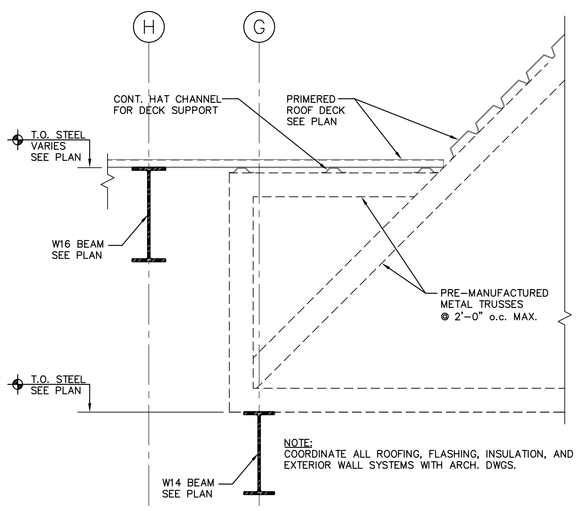

11 S2.03 **ROOF FRAMING DETAIL**
SCALE: 1" = 1'-0" WSSR-312

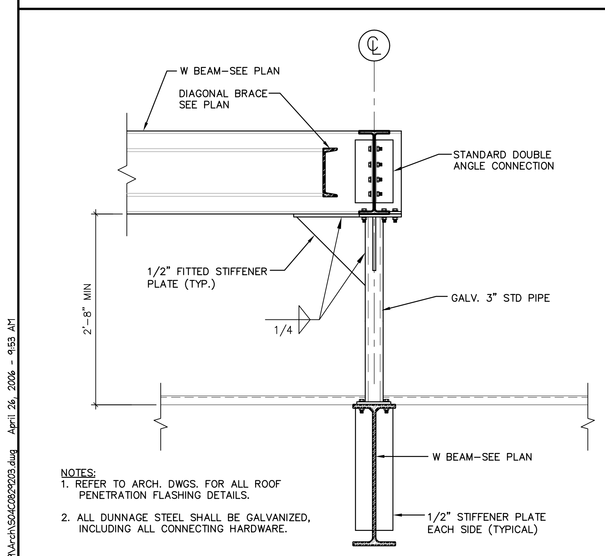

12 S2.03 **ROOF FRAMING DETAIL**
SCALE: 1" = 1'-0" WSSR-321

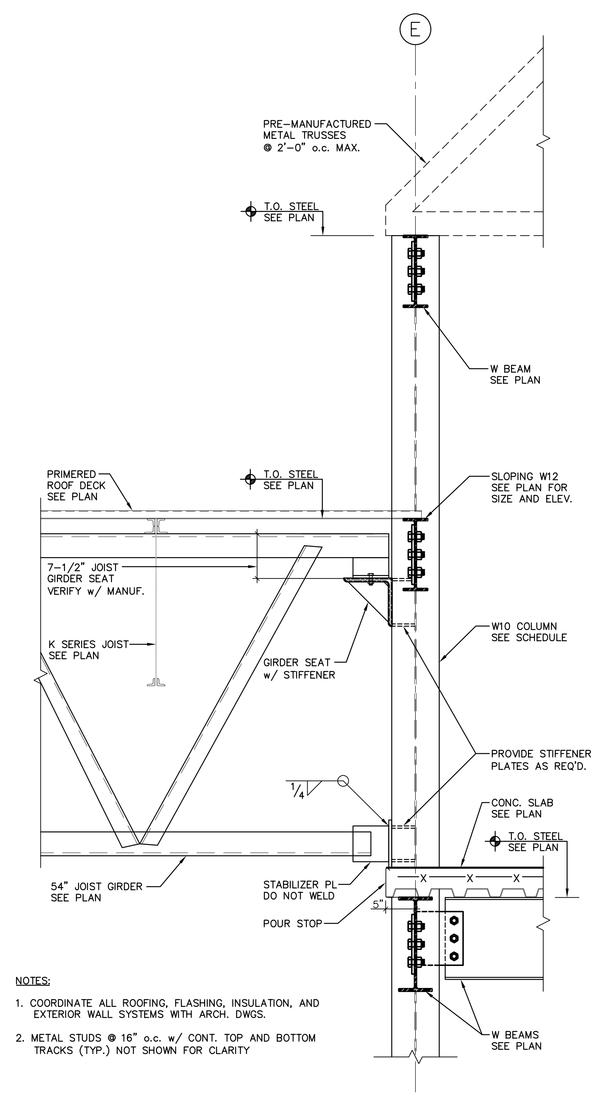

13 S2.03 **ROOF FRAMING DETAIL**
SCALE: 1" = 1'-0" WSSR-306

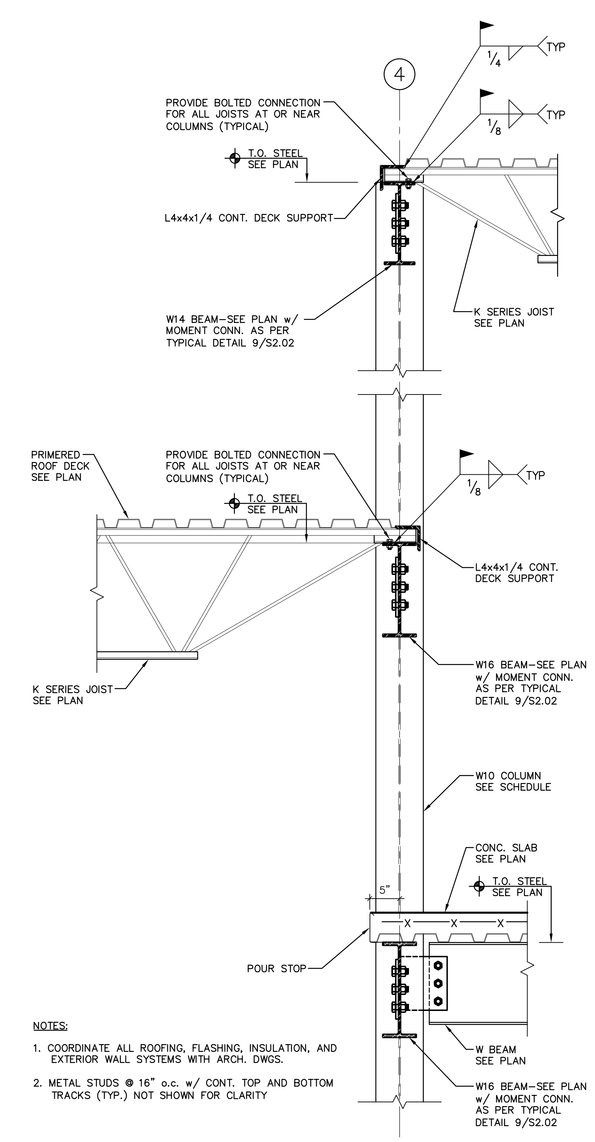

14 S2.03 **ROOF FRAMING DETAIL**
SCALE: 1" = 1'-0" WSSR-307

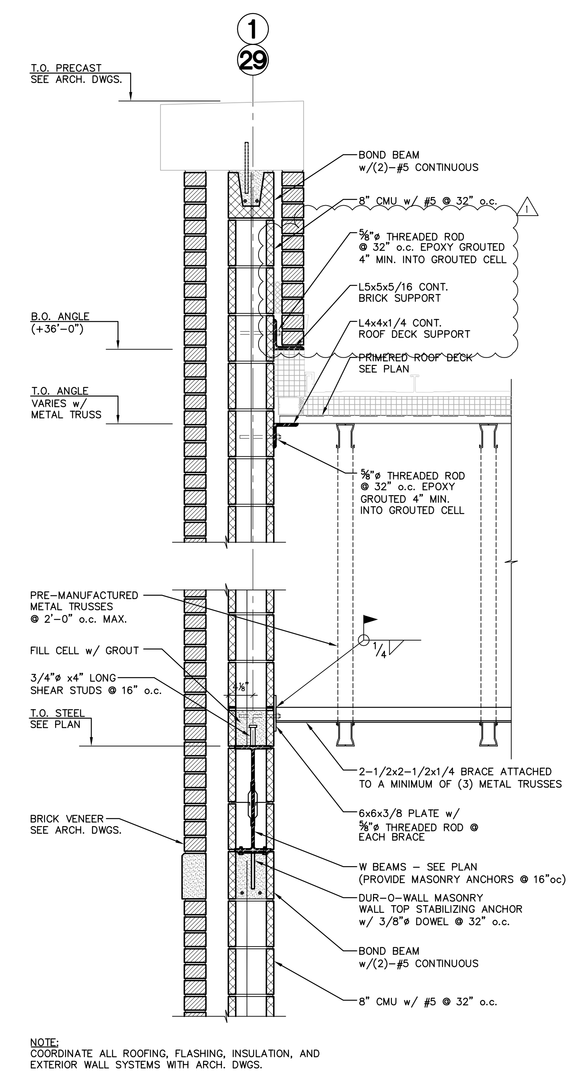

15 S2.03 **ROOF FRAMING DETAIL**
SCALE: 1" = 1'-0" WSSR-313

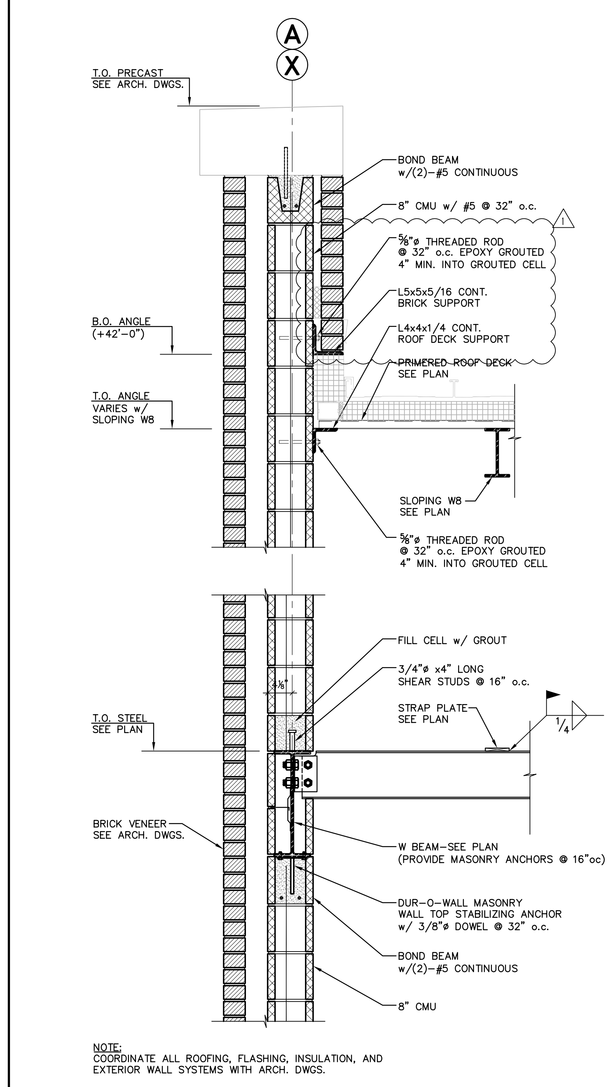

16 S2.03 **ROOF FRAMING DETAIL**
SCALE: 1" = 1'-0" WSSR-314

THESE DRAWINGS SHALL NOT BE UTILIZED BY ANY PERSON, FIRM OR CORPORATION WITHOUT THE SPECIFIC WRITTEN PERMISSION OF BL COMPANIES

C:\Users\AJACKSON\Acad\S04C082904.dwg Apr 25, 2006 - 4:53 AM

BL Companies
ARCHITECTURE
ENGINEERING
PLANNING
LANDSCAPE ARCHITECTURE
LAND SURVEYING
ENVIRONMENTAL SCIENCES
ANALYTICAL SERVICES
355 Research Parkway
Meriden, CT 06450
(203) 630-1406
(203) 630-2615 Fax

WHOLE FOODS MARKET

PROPOSED GROCERY STORE
FRANKLIN ST. ARTERIAL, FOX/SOMERSET ST., PEARL ST.
PORTLAND, CUMBERLAND COUNTY, MAINE

No.	Date	Desc.

REVISIONS
1 04-24-06 REVISIONS FOR CO COORDINATION
2 -

ARCHITECT/ENGINEER SEAL

Designed	E.A.B.
Drawn	E.A.B.
Checked	C.J.A.
Approved	B.B.
Scale	AS NOTED
Project No.	04C0829
Date	03-14-06
CAD File	XS04C082904

Title
STRUCTURAL DETAILS

Sheet No.
S2.03