FCP Battery Calculation

7/3/2013

PROJECT NAME: COFFEE BY DESIGN
Required Standby Time: 24 Hours
Required Alarm Time: 5 Minutes

Regulated Load in Standby

Device Type	Number of Devices		Current (Amps)		Total Current (Amps)
MS-9050UD Main Circuit Board	1	X	0.12000	=	0.12000
ANN-80 Remote Annunciator	1	X	0.01500	=	0.01500
SD355 Smoke Detector	1	X	0.00030	=	0.00030
MMF-301 Mini Monitor Module	4	X	0.00040	=	0.00160
BG-12LX Pull Station	1	X	0.00023	=	0.00023
TOTAL STANDBY LOAD					0.13713

Regulated Load in ALARM

Device Type	Number of Devices		Current (Amps)		Total Current (Amps)
MS-9050UD Main Circuit Board	1	X	0.20000	=	0.20000
ANN-80 Remote Annunciator	1	X	0.04000	=	0.04000
All Addressable Devices – Maximum Draw	1	X	0.40000	=	0.40000
NAC-1	1	X	0.62100	=	0.62100
TOTAL ALARM LOAD					1.26100

Battery Requirements

Standby Load			Required Standby Time in Hours		
Current (Amps)	0.13713	X	24.00000	=	3.29112
Alarm Load			Required Alarm Time in Hours		
Current (Amps)	1.26100	X	0.08333	=	0.10508
Total Ampere Hours (before derating factor)					3.39620
Derating Factor				X	1.2
TOTAL AMPERE HOURS REQUIRED				=	4.07544
BATTERIES TO BE PROVIDED (2 – 12v)					7 AH

FPS1 Battery Calculation

7/3/2013

PROJECT NAME: COFFEE BY DESIGN
Required Standby Time: 24 Hours
Required Alarm Time: 5 Minutes

AC Branch Current

AC Branch Current: 3.2 Amps @ 120V

Regulated Load in Standby

Device Type	Number of Devices		Current (Amps)		Total Current (Amps)
FCPS-24FS8 Main Circuit Board	1	X	0.06500	=	0.06500
TOTAL STANDBY LOAD					0.06500

Regulated Load in ALARM

Device Type	Number of Devices		Current (Amps)		Total Current (Amps)
FCPS-24FS8 Main Circuit Board	1	X	0.14500	=	0.14500
FPS1-1	1	X	1.65800	=	1.65800
FPS1-2	1	X	1.68200	=	1.68200
FPS1-3	1	X	1.26000	=	1.26000
FPS1-4	1	X	1.22200	=	1.22200
TOTAL ALARM LOAD					5.96700

Battery Requirements

Standby Load			Required Standby Time in Hours		
Current (Amps)	0.06500	X	24.00000	=	1.56000
Alarm Load			Required Alarm Time in Hours		
Current (Amps)	5.96700	X	0.08333	=	0.49725
Total Ampere Hours (before derating factor)					2.05725
Derating Factor				X	1.2
TOTAL AMPERE HOURS REQUIRED				=	2.46870
BATTERIES TO BE PROVIDED (2 – 12v)					7 AH

NAC Circuit Voltage Drop Calculation

7/3/2013

Project Name: COFFEE BY DESIGN
Circuit Number: NAC-1

Nominal System Voltage: 20.4 volts
Minimum Device Voltage: 16 volts
Distance from source to 1st device: 25
Wire Gauge for balance of circuit: Wire Gauge 14 / 14; Resistance Per 1000 6.14 / 6.14

Max Output Current: 1.5 amps
Total Circuit Current: 0.621 amps

Circuit is within limits

	Device Current	Distance previous device	Voltage at Device	Drop from source	Percent Drop
Device 1	0.079		20.30	0.10	0%
Device 2	0.066	2	20.30	0.10	0%
Device 3	0.066	9	20.27	0.13	1%
Device 4	0.079	13	20.24	0.16	1%
Device 5	0.066	24	20.19	0.21	1%
Device 6	0.079	21	20.16	0.24	1%
Device 7	0.079	41	20.11	0.29	1%
Device 8	0.107	19	20.10	0.30	1%
Totals	0.621	154			

NAC Circuit Voltage Drop Calculation

7/3/2013

Project Name: COFFEE BY DESIGN
Circuit Number: FPS1-1

Nominal System Voltage: 20.4 volts
Minimum Device Voltage: 16 volts
Distance from source to 1st device: 40
Wire Gauge for balance of circuit: Wire Gauge 14 / 14; Resistance Per 1000 6.14 / 6.14

Max Output Current: 2.0 amps
Total Circuit Current: 1.658 amps

Circuit is within limits

	Device Current	Distance previous device	Voltage at Device	Drop from source	Percent Drop
Device 1	0.107		19.99	0.41	2%
Device 2	0.176	53	19.49	0.91	4%
Device 3	0.176	2	19.47	0.93	5%
Device 4	0.176	62	19.01	1.39	7%
Device 5	0.176	2	19.00	1.40	7%
Device 6	0.176	55	18.72	1.68	8%
Device 7	0.176	42	18.54	1.86	9%
Device 8	0.107	32	18.45	1.95	10%
Device 9	0.176	62	18.30	2.10	10%
Device 10	0.212	2	18.30	2.10	10%
Totals	1.658	352			

NAC Circuit Voltage Drop Calculation

7/3/2013

Project Name: COFFEE BY DESIGN
Circuit Number: FPS1-2

Nominal System Voltage: 20.4 volts
Minimum Device Voltage: 16 volts
Distance from source to 1st device: 10
Wire Gauge for balance of circuit: Wire Gauge 14 / 14; Resistance Per 1000 6.14 / 6.14

Max Output Current: 2.0 amps
Total Circuit Current: 1.682 amps

Circuit is within limits

	Device Current	Distance previous device	Voltage at Device	Drop from source	Percent Drop
Device 1	0.066		20.30	0.10	1%
Device 2	0.079	25	20.05	0.35	2%
Device 3	0.212	22	19.84	0.56	3%
Device 4	0.079	4	19.81	0.59	3%
Device 5	0.066	12	19.72	0.68	3%
Device 6	0.066	6	19.67	0.73	4%
Device 7	0.066	17	19.56	0.84	4%
Device 8	0.066	6	19.52	0.88	4%
Device 9	0.107	37	19.30	1.10	5%
Device 10	0.079	16	19.21	1.19	6%
Device 11	0.212	15	19.14	1.26	6%
Device 12	0.079	21	19.06	1.34	7%
Device 13	0.079	2	19.05	1.35	7%
Device 14	0.107	14	19.02	1.38	7%
Device 15	0.107	56	18.91	1.49	7%
Device 16	0.212	2	18.91	1.49	7%
Totals	1.682	265			

NAC Circuit Voltage Drop Calculation

7/3/2013

Project Name: COFFEE BY DESIGN
Circuit Number: FPS1-3

Nominal System Voltage: 20.4 volts
Minimum Device Voltage: 16 volts
Distance from source to 1st device: 50
Wire Gauge for balance of circuit: Wire Gauge 14 / 14; Resistance Per 1000 6.14 / 6.14

Max Output Current: 2.0 amps
Total Circuit Current: 1.260 amps

Circuit is within limits

	Device Current	Distance previous device	Voltage at Device	Drop from source	Percent Drop
Device 1	0.107		20.01	0.39	2%
Device 2	0.107	2	20.00	0.40	2%
Device 3	0.290	35	19.77	0.63	3%
Device 4	0.290	67	19.46	0.94	5%
Device 5	0.290	54	19.31	1.09	5%
Device 6	0.176	40	19.27	1.13	6%
Totals	1.260	248			

GENERAL NOTES:

1. THESE DRAWINGS ARE DIAGRAMMATIC. REFER TO THE ARCHITECTURAL DRAWINGS FOR EXACT DIMENSIONS.
2. INSTALLATION SHALL COMPLY WITH NEC, NFPA 72 AND ALL OTHER APPLICABLE CODES AS REQUIRED BY THE LOCAL AUTHORITY HAVING JURISDICTION.
3. WIRING DEPICTED ON THESE PLANS IS SCHEMATIC – ACTUAL WIRE LOCATIONS MAY DIFFER FROM THESE PLANS. WIRING SHALL BE PERFORMED AS ACTUAL BUILDING CONSTRUCTION CONDITIONS ALLOW AND TO MINIMIZE PENETRATIONS THROUGH AREA SEPARATION WALLS AND FIRE WALLS. THE USE OF A RACEWAY IS PERMITTED AS LONG AS NO 110V OR HIGHER VOLTAGE CABLES ARE IN THE SAME RACEWAY.
4. FIRE RATINGS SHALL BE MAINTAINED FOR ALL PENETRATIONS THROUGH FIRE-RATED CONSTRUCTION.
5. POWER FOR ALL FIRE ALARM PANELS AND FIRE ALARM POWER SUPPLIES MUST BE PROVIDED BY A DEDICATED AC BRANCH CIRCUIT.
6. POWER-LIMITED AND NONPOWER-LIMITED CIRCUIT WIRING MUST REMAIN SEPARATED IN CABINET. ALL POWER-LIMITED CIRCUIT WIRING MUST REMAIN AT LEAST 0.25" AWAY FROM ANY NONPOWER-LIMITED CIRCUIT WIRING. FURTHERMORE, ALL POWER-LIMITED AND NONPOWER-LIMITED CIRCUIT WIRING MUST ENTER AND EXIT THE CABINET THROUGH DIFFERENT KNOCK OUTS AND/OR SEPARATE CONDUITS.
7. WHEN UTILIZING CLASS "A" CIRCUITS, SEPARATE OUTGOING AND RETURN CONDUCTORS OF CLASS "A" CIRCUITS BY A MINIMUM OF 12" WHERE RUN VERTICALLY AND 48" WHERE RUN HORIZONTALLY.
8. WHEN UTILIZING SHIELDED CABLE TIE SHIELDS THROUGH AND INSULATE AT EACH JUNCTION BOX. INSULATE AND TAPE BACK AT END.
9. ALL FIRE ALARM CABLING SHALL BE ACCEPTABLE TO THE FIRE ALARM EQUIPMENT MANUFACTURER FOR THE INTENDED PURPOSE.
10. SMOKE DETECTORS SHALL NOT BE INSTALLED UNTIL AFTER CONSTRUCTION CLEAN-UP IS COMPLETED AND FINAL.
11. LOCATE SMOKE DETECTORS A MINIMUM OF THREE (3) FEET FROM MECHANICAL DIFFUSERS. WALL-MOUNTED SMOKE DETECTORS SHALL BE LOCATED A MINIMUM OF 4" AND A MAXIMUM OF 12" FROM CEILING. CEILING-MOUNTED SMOKE DETECTORS SHALL BE MOUNTED ON CEILINGS AND NOT ON THE BOTTOMS OF BEAMS OR JOISTS.
12. PROVIDE SYNCHRONIZATION OF ALL VISUAL NOTIFICATION APPLIANCE CIRCUITS. PROVIDE ALL REQUIRED SYNC MODULES. PROVIDE A MULTI-SYNC MODE SLAVE CONNECTION BETWEEN ALL SYNC MODULES.
13. VERIFY ALL FIELD SELECTABLE AUDIBILITY SETTINGS OF NOTIFICATION APPLIANCES WITH FIRE ALARM CONTRACTOR.
14. UPON COMPLETION OF THE FIRE ALARM SYSTEM INSTALLATION AND PROGRAMMING, THE INSTALLING CONTRACTOR SHALL PERFORM FINAL TESTING OF THE ENTIRE SYSTEM, PER ALL APPLICABLE CODES, AND SHALL COORDINATE AND PERFORM A FINAL FIRE ALARM SYSTEM INSPECTION.
15. PROVIDE OFF-SITE MONITORING AS REQUIRED BY THE INTERNATIONAL FIRE CODE, SECTION 907.15 AND THE LOCAL AUTHORITY HAVING JURISDICTION.
16. INSTALLING CONTRACTOR SHALL, PHYSICALLY, LABEL ALL INITIATING DEVICES AND NOTIFICATION APPLIANCE CIRCUIT END OF LINE (WHEN WIRING CLASS "B"). THESE LABELS SHALL BE IN PLACE PRIOR TO START-UP AND TESTING.

APPLICABLE CODES:

MAINE UNIFORM ENERGY & BUILDING CODE
PORTLAND CITY CODE, CHAPTER10, FIRE PREVENTION & PROTECTION
NFPA 1, FIRE CODE, & NFPA 101, LIFE SAFETY CODE

FIRE ALARM SYMBOL LEGEND

NOTE: ALL SYMBOLS MAY NOT BE USED ON THIS PROJECT

SYMBOL	DESCRIPTION	MOUNTING
FCP	FIRE ALARM CONTROL PANEL	WALL-TOP @ 66"
FPS	FIRE ALARM POWER SUPPLY	FIELD VERIFY
FSA	FIRE SYSTEM ANNUNCIATOR	WALL-TOP @ 66"
FSD	FIRE/SMOKE DAMPER	BY OTHERS
	SMOKE DETECTOR	CEILING
	DUCT SMOKE DETECTOR	BY OTHERS
	HEAT DETECTOR	CEILING
CM	ADDRESSABLE CONTROL MODULE	FIELD VERIFY
MM	ADDRESSABLE MONITOR MODULE	FIELD VERIFY
M	ADDRESSABLE MINI MONITOR MODULE	FIELD VERIFY
P	MANUAL PULL STATION	WALL @ 48"
R	CONTROL RELAY (MULTI-VOLTAGE)	FIELD VERIFY
RM	ADDRESSABLE RELAY MODULE	FIELD VERIFY
	MAGNETIC DOOR HOLDER	FIELD VERIFY
	WATER FLOW SWITCH	BY OTHERS
	VALVE TAMPER SWITCH	BY OTHERS
LA	LOW AIR	BY OTHERS
LT	LOW TEMPERATURE	BY OTHERS
	BELL	BY OTHERS
	CEILING MOUNT STROBE	FIELD VERIFY
	CEILING MOUNT HORN / STROBE	FIELD VERIFY
	CEILING MOUNT SPEAKER / STROBE	FIELD VERIFY
	HORN	WALL @ 10'-0
	HORN / STROBE	WALL 80"-96"
SS	SPEAKER / STROBE	WALL 80"-96"
SP	SPEAKER	WALL @ 90"
	STROBE	WALL 80"-96"
KB	KNOX BOX	FIELD VERIFY

ABBREVIATION	DESCRIPTION
E	EXISTING
G	WITH GUARD
P	PENDENT MOUNT
R	RESIDENTIAL (110V)
S	SOUNDER BASE
WP	WEATHER PROOF
EOL	END OF LINE RESISTOR
EOLR	END OF LINE RELAY
AWG	AMERICAN WIRE GAUGE
TWP	TWISTED PAIR
TWSP	TWISTED SHIELDED PAIR
FPLP	FIRE POWER LIMITED PLENUM
FPLR	FIRE POWER LIMITED RISER

SPEAKER WATTAGE (2W) SS 75 STROBE CANDELA 30

DEVICE ADDRESS
L1D001 OR D01
L – DENOTES LOOP #
(D or M – DENOTES DETECTOR OR MODULE #)

1-#16/2 TWP
WIRE TYPE ABBREVIATED
CONDUCTOR COUNT
WIRE SIZE
OF CABLES (IF OMITTED ONLY 1 CABLE NEEDED)

OPERATIONS MATRIX

FIRE ALARM INPUT	FIRE ALARM OUTPUT	ACTIVATE ALARM INDICATOR	ACTIVATE AUDIBLE ALARM	ACTIVATE SUPERVISORY INDICATOR	ACTIVATE AUDIBLE SUPERVISORY SIGNAL	ACTIVATE TROUBLE INDICATOR	ACTIVATE AUDIBLE TROUBLE INDICATOR	TRANSMIT ALARM SIGNAL	TRANSMIT SUPERVISORY SIGNAL	TRANSMIT TROUBLE SIGNAL
SMOKE DETECTORS		●	●					●		
PULL STATIONS		●	●					●		
WATERFLOW SWITCHES		●	●					●		
VALVE TAMPER SWITCHES				●	●				●	
LOW AIR SWITCHES				●	●				●	
LOW TEMPERATURE SWITCHES				●	●				●	
FIRE ALARM AC POWER FAIL						●	●			●
FIRE ALARM LOW BATTERY						●	●			●
OPEN CIRCUIT						●	●			●
GROUND FAULT						●	●			●
NAC SHORT CIRCUIT						●	●			●
LOSS OF AC TO BUILDING						●	●			●

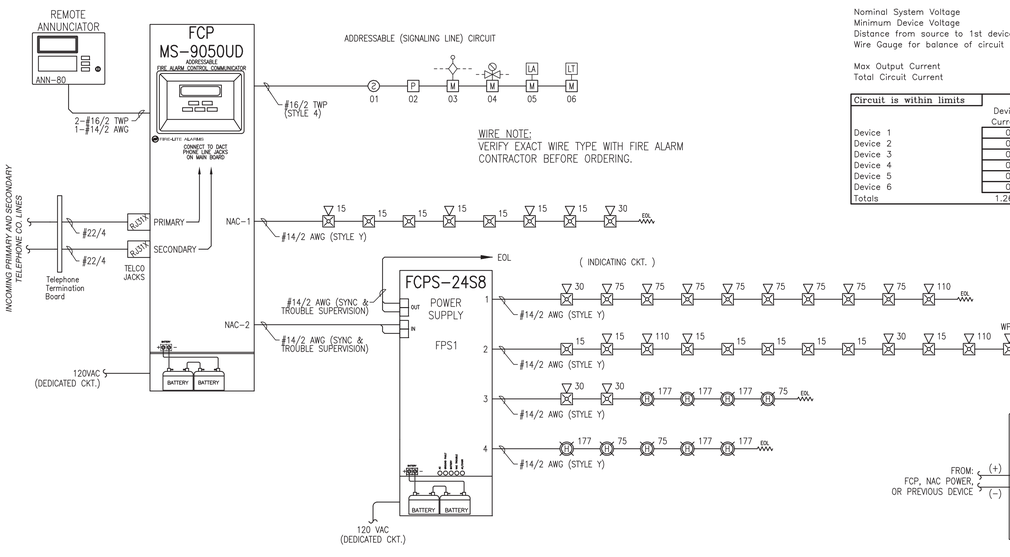

FIRE ALARM RISER DIAGRAM

SCHEMATIC: NO SCALE

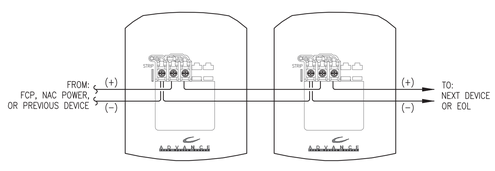

TYPICAL 2 WIRE STROBE WIRING DETAIL

SCHEMATIC: NO SCALE

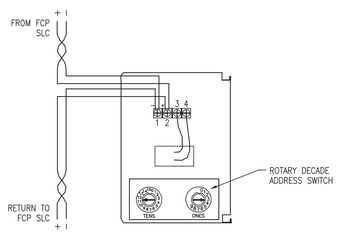

MANUAL PULL STATION WIRING DETAIL

SCHEMATIC: NO SCALE

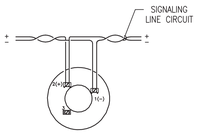

ADDRESSABLE SMOKE DETECTOR WIRING DETAIL

SCHEMATIC: NO SCALE

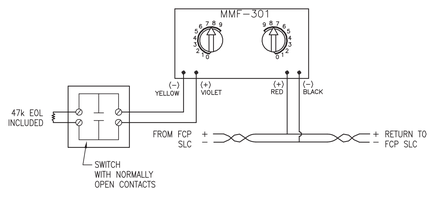

SPRINKLER SWITCHES WIRING DETAIL

SCHEMATIC: NO SCALE

Reviewed for Code Compliance
Inspections Division
Approved with Conditions
Date: 7/31/2013

RESERVED FOR CITY STAMP

REVISION	DESCRIPTION	DATE
0	ISSUED FOR REVIEW & APPROVAL	7/5/2013

CUNNINGHAM
Security Systems
10 Princes Point Road, Yarmouth, Maine 04096
Office: 207.846.3350 • Fax: 207.846.6080

COFFEE BY DESIGN
DIAMOND ST. WAREHOUSE RENOVATION
1-11 DIAMOND ST., PORTLAND, ME
CALCS, DETAILS, LEGEND, MATRIX, NOTES

DRAWN	JPB UNICAD JOB #13345
CHECKED	WAYNE B. HAWS NICET IV 90496
DATE	7/3/2013
REVISION	0
SCALE	NONE

FA-1

shop drawings created by: 5754 W. 4600 So. Hooper, UT 84315 Office: 801.985.0410
UNICAD inc.
www.unicad.net Fire Alarm Design & Drafting Services