RESURGAM
CITY OF PORTLAND, MAINE
Reviewed for Code Compliance
Inspections Division
Approved with Conditions
Date: 07/31/13

Indoor Selectable-Output Strobes and Horn Strobes for Ceiling Applications

SpectrAlert® Advance audible visible notification products are rich with features guaranteed to cut installation times and maximize profits.

Features

- Plug-in design with minimal intrusion into the back box
- Tamper-resistant construction
- Automatic selection of 12- or 24-volt operation at 15 and 15/75 candela
- Field-selectable candela settings on ceiling units: 15, 15/75, 30, 75, 95, 110, 115, 135, 150, 177, and 185
- Horn rated at 88+ dBA at 16 volts
- Rotary switch for horn tone and three volume selections
- Universal mounting plate for ceiling units
- Mounting plate shorting spring checks wiring continuity before device installation
- Electrically Compatible with legacy SpectrAlert devices
- Compatible with MDL sync module
- Listed for ceiling or wall mounting

The SpectrAlert Advance series offers the most versatile and easy-to-use line of horns, strobes, and horn strobes in the industry. With white and red plastic housings, wall and ceiling mounting options, and plain and FIRE-printed devices, SpectrAlert Advance can meet virtually any application requirement.

Like the entire SpectrAlert Advance product line, ceiling-mount strobes and horn strobes include a variety of features that increase their application versatility while simplifying installation. All devices feature plug-in designs with minimal intrusion into the back box, making installations fast and foolproof while virtually eliminating costly and time-consuming ground faults.

To further simplify installation and protect devices from construction damage, SpectrAlert Advance utilizes a universal mounting plate with an onboard shorting spring, so installers can test wiring continuity before the device is installed.

Installers can also easily adapt devices to a suit a wide range of application requirements using field-selectable candela settings, automatic selection of 12- or 24-volt operation, and a rotary switch for horn tones with three volume selections.

Agency Listings

SIGNALING UL LISTED
S4011 (chimes, horn strobes, horns)
S5512 (strobes)

FM APPROVED
3023572

MEA approved
MEA452-05-E

7125-1653:186 (indoor strobes)
7125-1653:188 (horn strobes, chime strobes)
7135-1653:189 (horns, chimes)

Reviewed for Code Compliance
Inspections Division
Approved with Conditions

Date: 07/31/13

SpectrAlert Advance Specifications

Architect/Engineer Specifications

General

SpectrAlert Advance strobes and horn strobes shall mount to a standard 4 × 4 × 1½-inch back box, 4-inch octagon b gang back box. Two-wire products shall also mount to a single-gang 2 × 4 × 17⁄8-inch back box. A universal mountir mounting ceiling and wall products. The notification appliance circuit wiring shall terminate at the universal mounting Advance products, when used with the Sync•Circuit™ Module accessory, shall be powered from a non-coded notifica output and shall operate on a nominal 12 or 24 volts. When used with the Sync•Circuit Module, 12-volt-rated notificati outputs shall operate between 9 and 17.5 volts; 24-volt-rated notification appliance circuit outputs shall operate between 17 and 33 volts. Indoor SpectrAlert Advance products shall operate between 32 and 120 degrees Fahrenheit from a regulated DC or full-wave rectified unfiltered power supply. Strobes and horn strobes shall have field-selectable candela settings including 15, 15/75, 30, 75, 95, 110, 115, 135, 150, 177, and 185.

Strobe

The strobe shall be a System Sensor SpectrAlert Advance Model _____ listed to UL 1971 and shall be approved for fire protective service. The strobe shall be wired as a primary-signaling notification appliance and comply with the Americans with Disabilities Act requirements for visible signaling appliances, flashing at 1 Hz over the strobe's entire operating voltage range. The strobe light shall consist of a xenon flash tube and associated lens/reflector system.

Horn Strobe Combination

The horn strobe shall be a System Sensor SpectrAlert Advance Model _____ listed to UL 1971 and UL 464 and shall be approved for fire protective service. The horn strobe shall be wired as a primary-signaling notification appliance and comply with the Americans with Disabilities Act requirements for visible signaling appliances, flashing at 1 Hz over the strobe's entire operating voltage range. The strobe light shall consist of a xenon flash tube and associated lens/reflector system. The horn shall have three audibility options and an option to switch between a temporal three pattern and a non-temporal (continuous) pattern. These options are set by a multiple position switch. On four-wire products, the strobe shall be powered independently of the sounder. The horn on horn strobe models shall operate on a coded or non-coded power supply.

Synchronization Module

The module shall be a System Sensor Sync•Circuit model MDL listed to UL 464 and shall be approved for fire protective service. The module shall synchronize SpectrAlert strobes at 1 Hz and horns at temporal three. Also, while operating the strobes, the module shall silence the horns on horn strobe models over a single pair of wires. The module shall mount to a 411⁄16 × 411⁄16 × 21⁄8-inch back box. The module shall also control two Style Y (class B) circuits or one Style Z (class A) circuit. The module shall synchronize multiple zones. Daisy chaining two or more synchronization modules together will synchronize all the zones they control. The module shall not operate on a coded power supply.

Physical/Electrical Specifications

Standard Operating Temperature	32°F to 120°F (0°C to 49°C)
Humidity Range	10 to 93% non-condensing
Strobe Flash Rate	1 flash per second
Nominal Voltage	Regulated 12 DC/FWR or regulated 24 DC/FWR[1]
Operating Voltage Range[2]	8 to 17.5 V (12 V nominal) or 16 to 33 V (24 V nominal)
Input Terminal Wire Gauge	12 to 18 AWG
Ceiling-Mount Dimensions (including lens)	6.8″ diameter × 2.5″ high (173 mm diameter × 64 mm high)
Ceiling-Mount Back Box Skirt Dimensions (BBSC-2, BBSCW-2)	7.1″ diameter × 2.2″ high (180 mm diameter × 57 mm high)
Ceiling-Mount Trim Ring Dimensions (sold as a 5 pack) (TRC-HS, TRCW-HS)	6.9″ diameter × 0.35″ high (175 mm diameter × 9 mm high)

Notes:

1. Full Wave Rectified (FWR) voltage is a non-regulated, time-varying power source that is used on some power supply and panel outputs.
2. P, S, PC, and SC products will operate at 12 V nominal only for 15 and 15/75 cd.

Reviewed for Code Compliance
Inspections Division
Approved with Conditions

Date: 07/31/13

UL Current Draw Data

UL Max. Strobe Current Draw (mA RMS)

		8–17.5 Volts		16–33 V
	Candela	DC	FWR	DC
Standard Candela Range	15	123	128	66
	15/75	142	148	77
	30	NA	NA	94
	75	NA	NA	158
	95	NA	NA	181
	110	NA	NA	202
	115	NA	NA	210
High Candela Range	135	NA	NA	228
	150	NA	NA	246
	177	NA	NA	281
	185	NA	NA	286

UL Max. Current Draw (mA RMS), 2-Wire Horn Strobe, Standard Candela Range (15–115 cd)

	8–17.5 Volts		16–33 Volts						
DC Input	15	15/75	15	15/75	30	75	95	110	115
Temporal High	137	147	79	90	107	176	194	212	218
Temporal Medium	132	144	69	80	97	157	182	201	210
Temporal Low	132	143	66	77	93	154	179	198	207
Non-Temporal High	141	152	91	100	116	176	201	221	229
Non-Temporal Medium	133	145	75	85	102	163	187	207	216
Non-Temporal Low	131	144	68	79	96	156	182	201	210
FWR Input									
Temporal High	136	155	88	97	112	168	190	210	218
Temporal Medium	129	152	78	88	103	160	184	202	206
Temporal Low	129	151	76	86	101	160	184	194	201
Non-Temporal High	142	161	103	112	126	181	203	221	229
Non-Temporal Medium	134	155	85	95	110	166	189	208	216
Non-Temporal Low	132	154	80	90	105	161	184	202	211

UL Max. Current Draw (mA RMS), 2-Wire Horn Strobe, High Candela Range (135–185 cd)

	16–33 Volts					16–33 Volts			
DC Input	135	150	177	185	FWR Input	135	150	177	185
Temporal High	245	259	290	297	Temporal High	215	231	258	265
Temporal Medium	235	253	288	297	Temporal Medium	209	224	250	258
Temporal Low	232	251	282	292	Temporal Low	207	221	248	256
Non-Temporal High	255	270	303	309	Non-Temporal High	233	248	275	281
Non-Temporal Medium	242	259	293	299	Non-Temporal Medium	219	232	262	267
Non-Temporal Low	238	254	291	295	Non-Temporal Low	214	229	256	262

Horn Strobe Tones and Sound Output Data

Horn Strobe Output (dBA)

			8–17.5 Volts		16–33 Volts		24-Volt Nominal			
							Reverberant		Anechoic	
Switch Position	Sound Pattern	dB	DC	FWR	DC	FWR	DC	FWR	DC	FWR
1	Temporal	High	78	78	84	84	88	88	99	98
2	Temporal	Medium	74	74	80	80	86	86	96	96
3	Temporal	Low	71	73	76	76	83	80	94	89
4	Non-Temporal	High	82	82	88	88	93	92	100	100
5	Non-Temporal	Medium	78	78	85	85	90	90	98	98
6	Non-Temporal	Low	75	75	81	81	88	84	96	92
7†	Coded	High	82	82	88	88	93	92	101	101
8†	Coded	Medium	78	78	85	85	90	90	97	98
9†	Coded	Low	75	75	81	81	88	85	96	92

†Settings 7, 8, and 9 are not available on 2-wire horn strobes.

Reviewed for Code Compliance
Inspections Division
Approved with Conditions

Date: 07/31/13

SpectrAlert Advance Dimensions

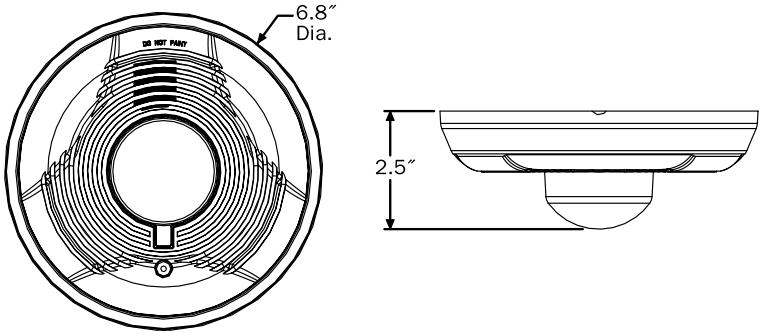

Ceiling-mount horn strobes

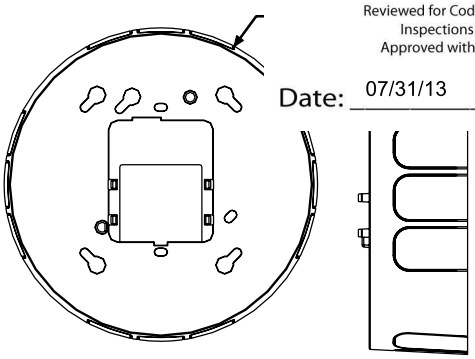

Ceiling back box skirt

SpectrAlert Advance Ordering Information

Model	Description
Ceiling Horn Strobes	
PC2R*	2-Wire Horn Strobe, Standard cd, Red
PC2RH	2-Wire Horn Strobe, High cd, Red
PC2W*†	2-Wire Horn Strobe, Standard cd, White
PC2WH*	2-Wire Horn Strobe, High cd, White
PC4R	4-Wire Horn Strobe, Standard cd, Red
PC4RH	4-Wire Horn Strobe, High cd, Red
PC4W	4-Wire Horn Strobe, Standard cd, White

Model	Description
Ceiling Strobes	
SCR	Strobe, Standard cd, Red
SCRH	Strobe, High cd, Red
SCW*	Strobe, Standard cd, White
SCWH	Strobe, High cd, White
Accessories	
BBSC-2	Back Box Skirt, Ceiling, Red
	Back Box Skirt, Ceiling, White
TRC-HS	Trim Ring, Ceiling, Red
TRCW-HS	Trim Ring, Ceiling, White

Notes:

* Add "-P" to model number for plain housing (no "FIRE" marking on cover), e.g., P2R-P.
† Add "-SP" to model number for "FUEGO" marking on cover, e.g., P2R-SP.
‡ "Standard cd" refers to strobes that include 15, 15/75, 30, 75, 95, 110, and 115 candela settings. "High cd" refers to strobes that include 135, 150, 177, and 185 candela settings.

SYSTEM SENSOR®

3825 Ohio Avenue • St. Charles, IL 60174
Phone: 800-SENSOR2 • Fax: 630-377-6495

©2012 System Sensor.
Product specifications subject to change without notice. Visit systemsensor.com for current product information, including the latest version of this data sheet.

AVDS00501 • 3/12