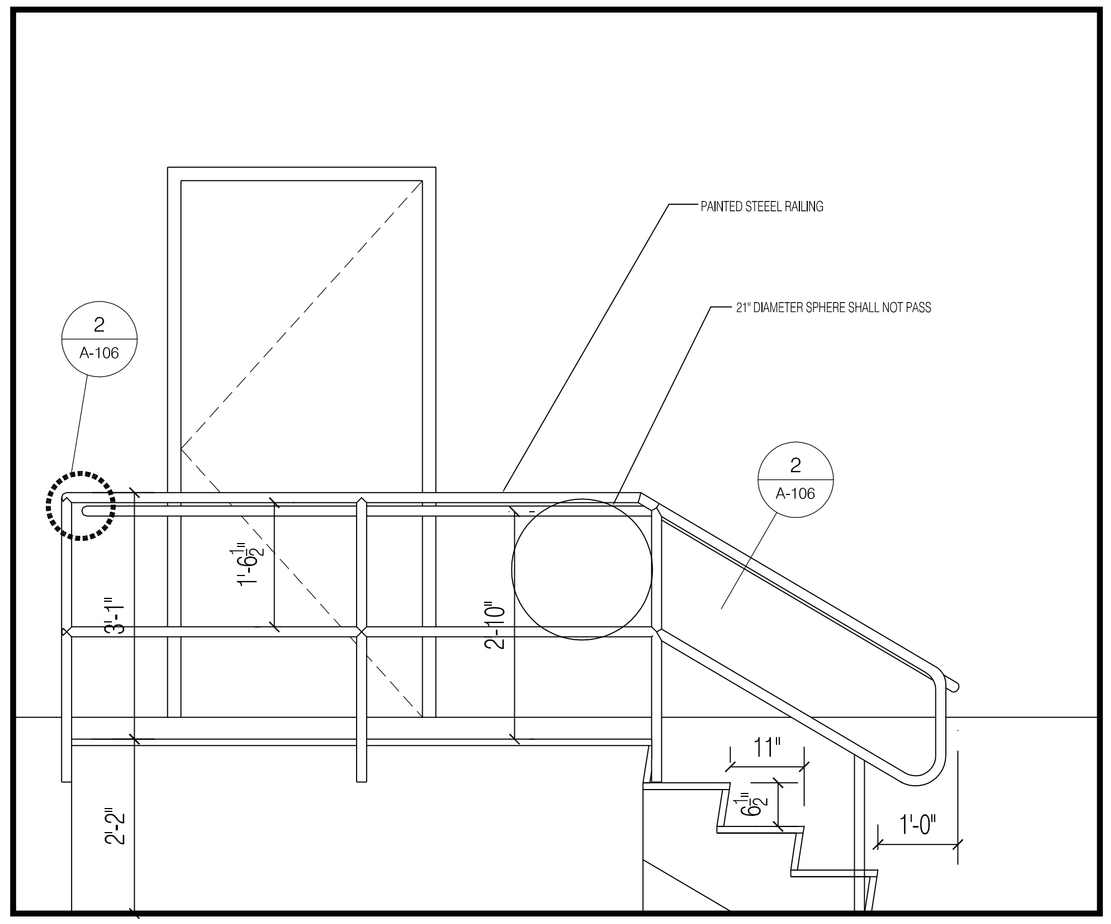

3 REAR EGRESS STAIR AND RAILING
3/4" = 1'-0"

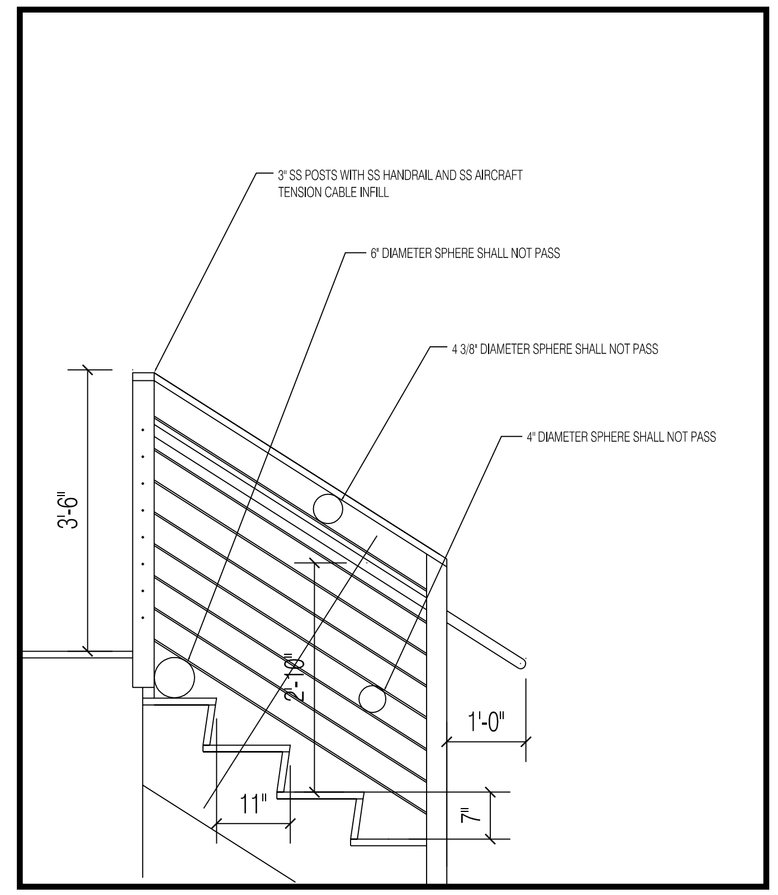

4 FRONT STAIR AND RAILING PROFILE
3/4" = 1'-0"

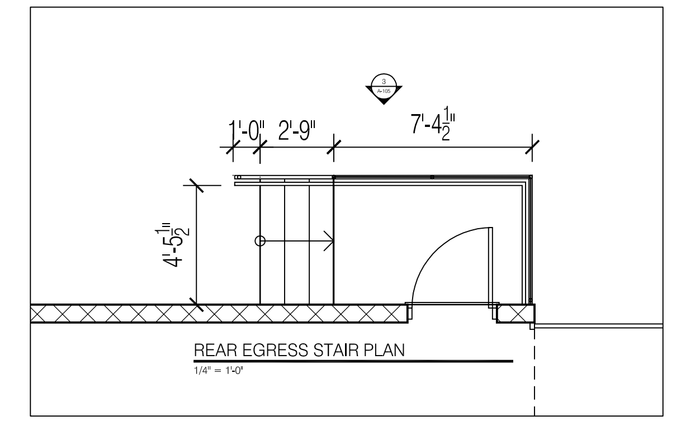

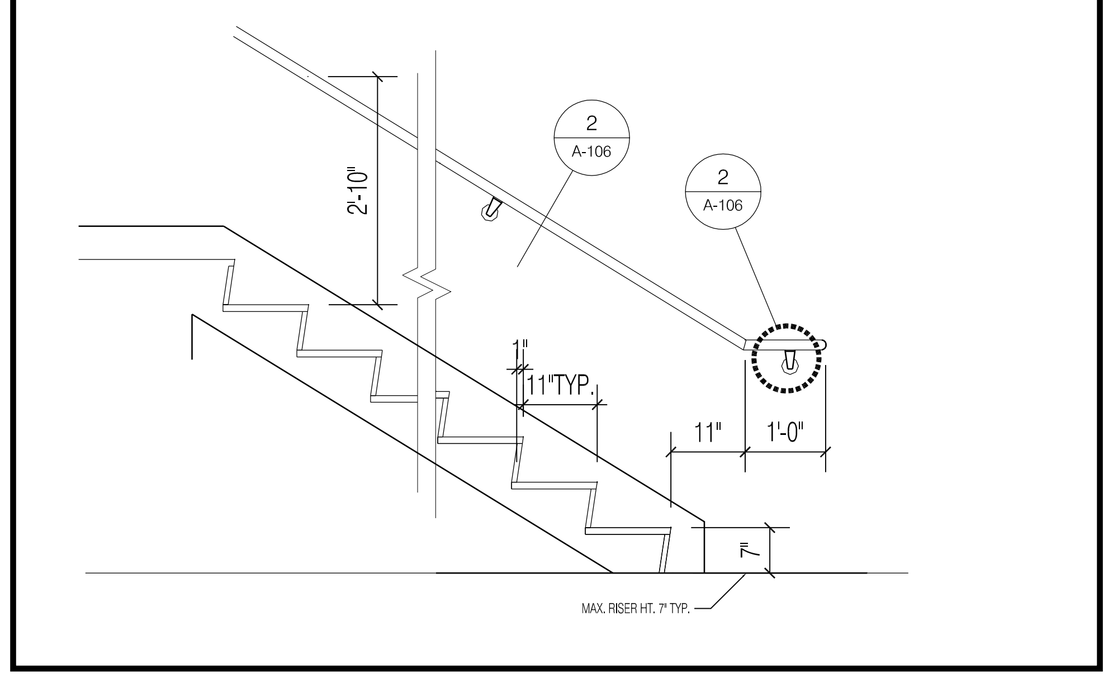

1 STAIR PROFILE
3/4" = 1'-0"

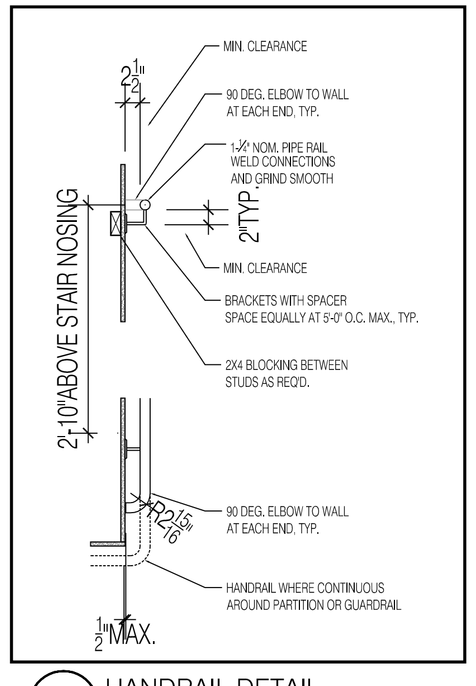

2 HANDRAIL DETAIL
3/4" = 1'-0"

NOTE:
1. MINIMUM CLEAR FINISHED WIDTH IS 44"
2. MAXIMUM RISER HT 7" TYP.
3. MAXIMUM RAMP SLOPE IS 1/12

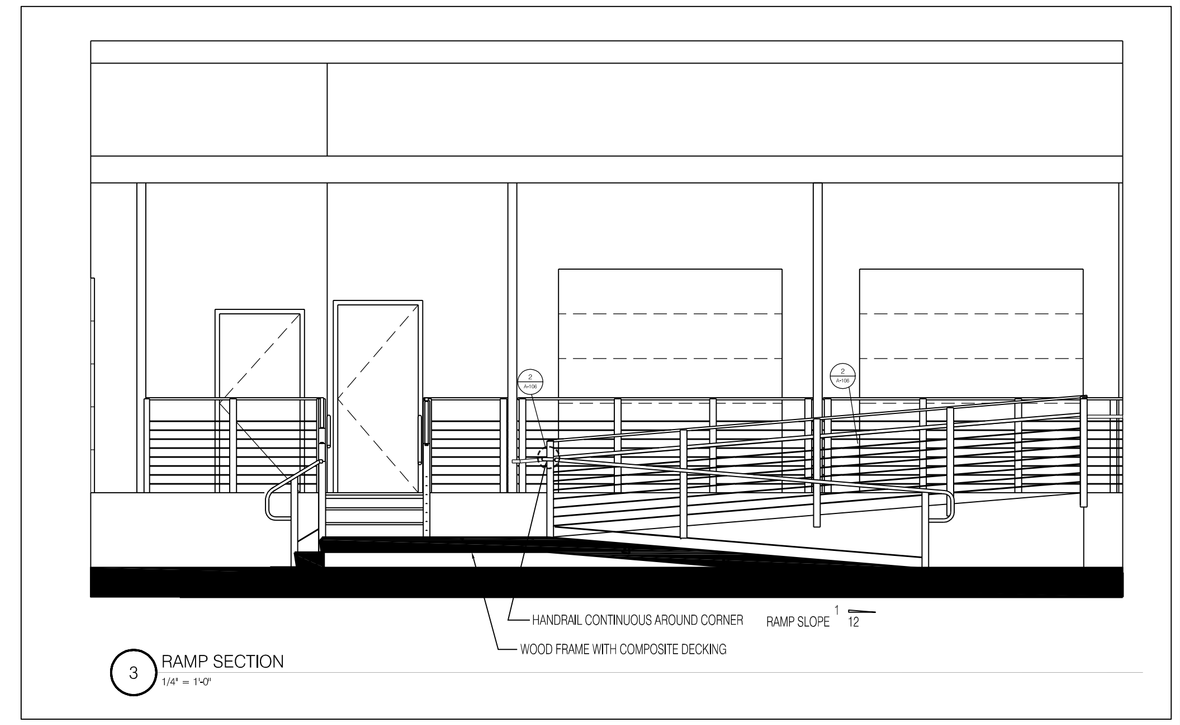

3 RAMP SECTION
1/4" = 1'-0"

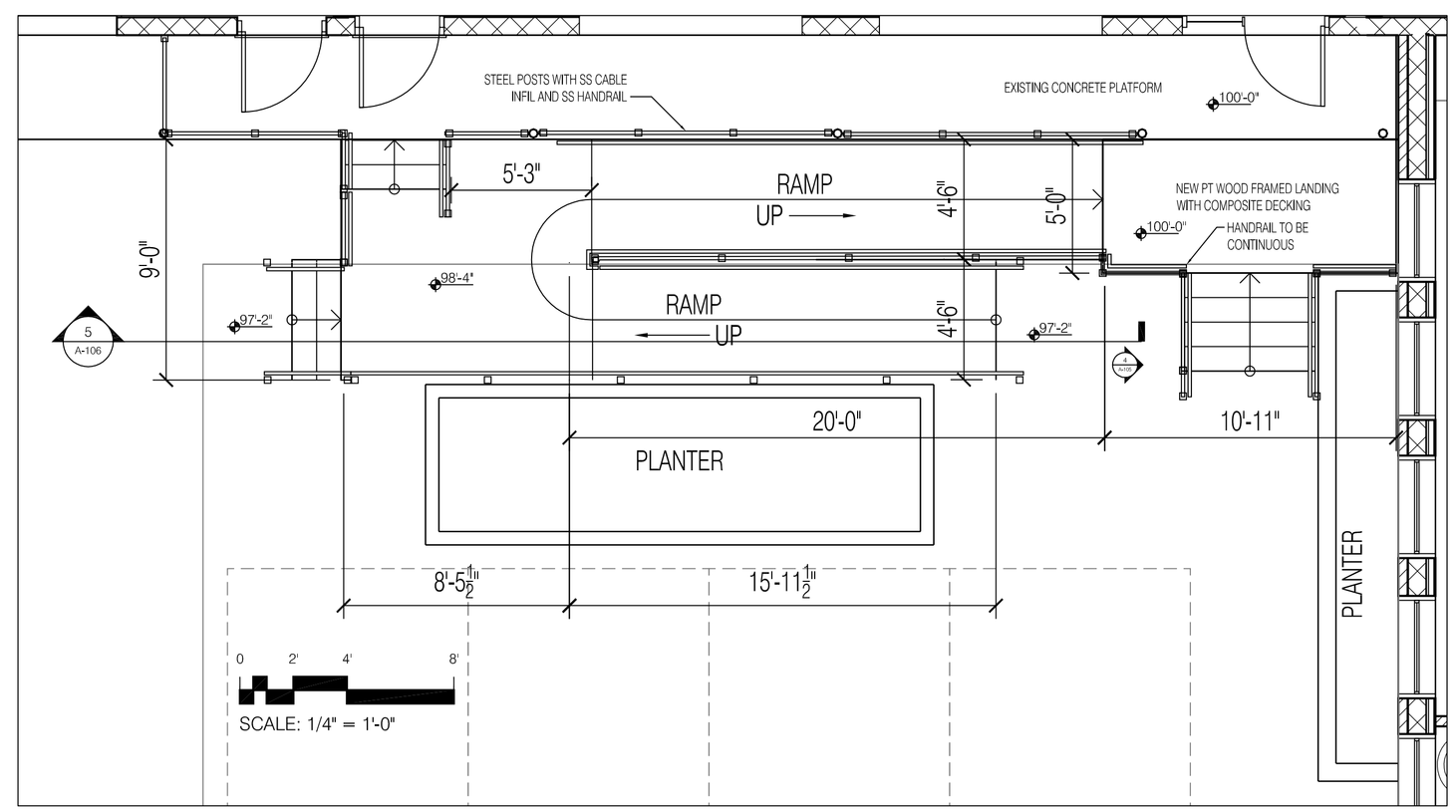

PROSPECT DESIGN
ARCHITECTURE | EXHIBITIONS
207·749·7400 | prospectdesign.me

HEMESphere DESIGN LLC

CONSTRUCTION

DIAMOND ST. WAREHOUSE RENOVATION
1-11 DIAMOND ST, PORTLAND, ME
A.D. BEANER, LLC
43 WASHINGTON AVENUE, PORTLAND

SHEET TITLE
RAMP PLAN

REVISION

DRAWN BY: ##

DATE:

A-105