NOTES:

1. ALL RAMPS SHALL COMPLY WITH ADA STANDARDS.
2. GRANITE CURB ADJACENT TO RAMP SHALL BE FLUSH WITH STREET
3. FIELD MEASURE ARC LENGTH/RADIUS OF DETECTABLE WARNING PANEL PRIOR TO ORDERING.

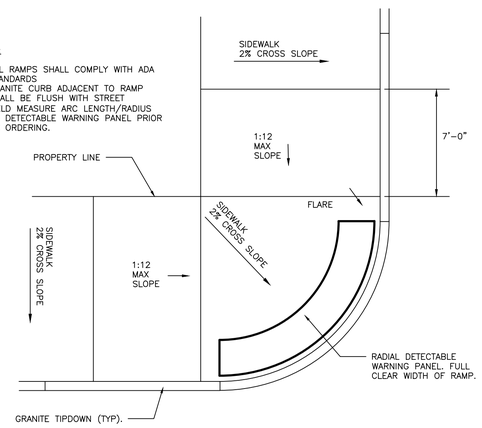

DIAGONAL SIDEWALK RAMP LAYOUT AT INTERSECTION FOR SIDEWALK WITHOUT ESPLANADE

NOT TO SCALE

NOTES:

1. ALL RAMPS SHALL COMPLY WITH CITY OF PORTLAND AND ADA STANDARDS.
2. VERTICAL GRANITE CURB ADJACENT TO RAMP SHALL BE FLUSH WITH STREET.
3. SIDEWALK MATERIAL SHALL BE PER CITY SIDEWALK MATERNAL POLICY.
4. FLARED SECTIONS SHOULD MATCH SURFACE MATERIAL USED FOR SIDEWALK CONSTRUCTION.

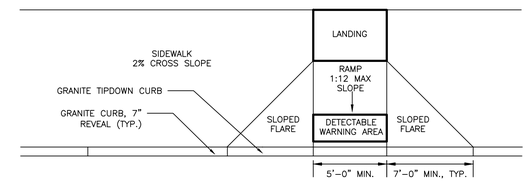

DESIGN ELEMENT	SLOPE IN DIRECTION OF TRAVEL	CROSS SLOPE
APPROACH	8.33% MAX	2%
LANDING	2%	2%
RAMP	8.33% MX	MATCH STREET GRADE
FLARE	10% MAX AT CURB FACE	–
SIDEWALK	MATCH STREET GRADE	2%

PREFERRED SIDEWALK RAMP LAYOUT AT INTERSECTION FOR SIDEWALK WITHOUT ESPLANADE

NOT TO SCALE

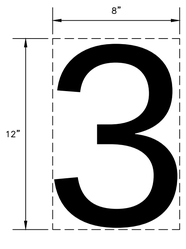

NOTES:

1. NUMBERS TO BE PAINTED AS THE SAME COLOR AS THE CORRESPONDING PARKING SPACE.
2. BOTTOM OF NUMBER TO BE FLUSH WITH THE FRONT OF THE PARKING SPACE.

PARKING STALL NUMBER DETAIL

NOT TO SCALE

NOTES:

1. COMPOSITE WET SET (REPLACEABLE) DETECTABLE WARNING PANELS SHALL BE AS MANUFACTURED BY ADA SOLUTIONS, INC. (WWW.ADATILE.COM) OR APPROVED EQUAL.
2. CAST IN PLACE CONCRETE SHALL MEET SPECIFICATIONS FOR MAINE D.O.T. CLASS A STRUCTURAL CONCRETE, MINIMUM COMPRESSIVE STRENGTH 4,000 PSI. THE CONCRETE SHALL BE SEALED PRIOR TO SETTING PANELS. THE EXPOSED CONCRETE BORDER SHALL RECEIVE A GROOVED EDGE BETWEEN THE PANEL AND CONCRETE, ALONG WITH A UNIFORM BROOM FINISH PERPENDICULAR TO THE FLOW OF PEDESTRIAN TRAFFIC.
3. TRUNCATED DOMES SHALL BE ALIGNED IN ROWS, PARALLEL AND PERPENDICULAR TO THE PREDOMINANT DIRECTION OF TRAVEL. TRUNCATED DOME BRICKS AND GRANITE PAVERS ARE NOT ALLOWED.
4. FOR ALL DETECTABLE WARNING PANELS (EXCEPT AS SPECIFIED IN TECHNICAL MANUAL 1.8.4.), FEDERAL DARK GRAY COLORED (#36118) PANEL(S) SHALL BE USED. FOLLOW MANUFACTURER'S INSTRUCTIONS FOR INSTALLATION.
5. SIZE: THE DETECTABLE WARNING PANEL(S) SHALL EXTEND 24 INCHES MINIMUM IN THE DIRECTION OF TRAVEL AND THE FULL WIDTH OF THE CURB RAMP, LANDING, OR BLENDED TRANSITION TO THE STREET.
6. ORIENTATION: THE DETECTABLE WARNING PANEL SHALL BE LOCATED SO THAT THE EDGE NEAREST TO THE CURB LINE IS 6 INCHES MINIMUM AND 8 INCHES MAXIMUM FROM THE CURB LINE. THE PANEL SHALL BE ORIENTED TO THE DIRECTION OF TRAVEL AS IDENTIFIED BY THE POINT OF EGRESS.

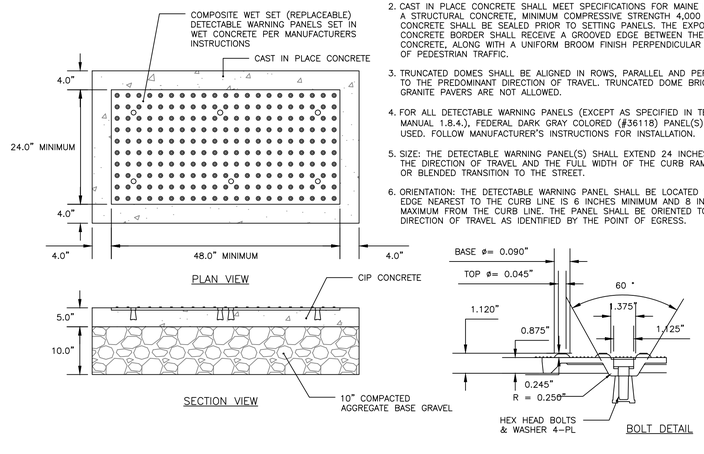

SIDEWALK RAMP DETECTABLE WARNING PANEL

NOT TO SCALE

NOTES:

1. ALL ASPECTS OF NO PARKING SIGN CONSTRUCTION SHALL BE IN ACCORDANCE WITH MANUAL ON UNIFORM TRAFFIC CONTROL DEVICES, 2009 OR MOST RECENT EDITION
2. SIGN SHALL BE CONSTRUCTED AS SIGN R7-1 UNDER THE "PARKING AND STANDING SIGNS AND PLAQUES" (R7 SERIES) WITHIN THE MANUAL ON UNIFORM TRAFFIC CONTROL DEVICES, 2009 OR MOST RECENT EDITION.
3. SIGN POST CONSTRUCTION AND MOUNTING SHALL BE IN ACCORDANCE WITH CHAPTER 2A OF THE MANUAL ON UNIFORM TRAFFIC CONTROL DEVICES, 2009 OR MOST RECENT EDITION.

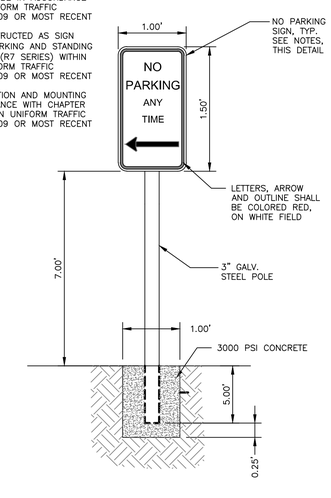

NO PARKING DETAIL

NOT TO SCALE

CITY OF PORTLAND
APPROVED SITE PLAN
Subject to Conditions of Approval
and Standard Conditions

DATE of APPROVAL September 27, 2016
PLANNER Shukria Wiar
PROJECT NO. 2016-099

STATE OF MAINE
WILLIAM SAVAGE
No. 11451
8-22-16
PROFESSIONAL ENGINEER

FINAL APPLICATION
NOT ISSUED FOR
CONSTRUCTION

ISSUED FOR	BY / DATE
PRELIMINARY APP	WHS 4/25/16
FINAL APP	WHS 8/22/16

REVISION	REV. DATE

DRAWING NAME: SITE DETAILS – 2

PROJECT NAME: 70 ANDERSON STREET REDEVELOPMENT

CLIENT: REDFERN PROPERTIES, LLC
P.O. BOX 8816 PORTLAND, ME 04104

ACORN ENGINEERING, INC.

THIS PLAN SHALL NOT BE MODIFIED WITHOUT WRITTEN PERMISSION FROM ACORN ENGINEERING, INC. ANY MODIFICATIONS, WHETHER WRITTEN OR OTHERWISE, SHALL BE AT THE USER'S SOLE RISK AND WITHOUT LIABILITY TO ACORN ENGINEERING, INC.

ACORN ENGINEERING, INC.
158 DANFORTH ST. PORTLAND, MAINE 04102
(207) 775-2655

FILE:	CIVIL_1067
JN:	1067
SCALE:	NTS
DESIGNED BY:	WHS
DRAWN BY:	OJD
CHECKED BY:	WHS

DRAWING NO.
C-41