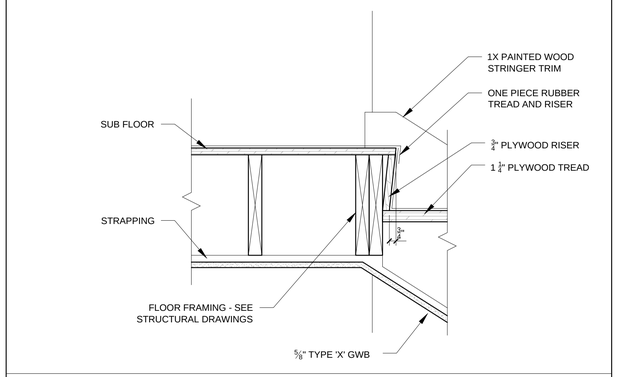


3 SECTION DETAIL AT STAIR TREAD AND LANDING
1 1/2" = 1'-0"

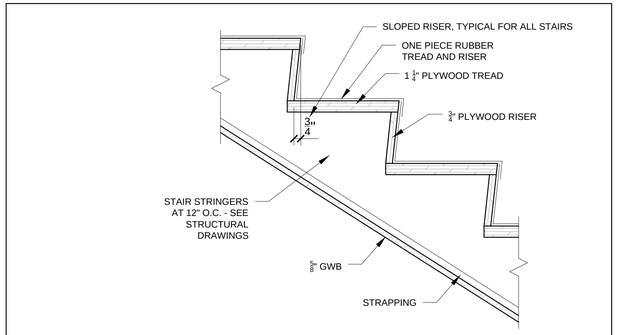


2 TYPICAL SECTION THORUGH STAIR
1 1/2" = 1'-0"

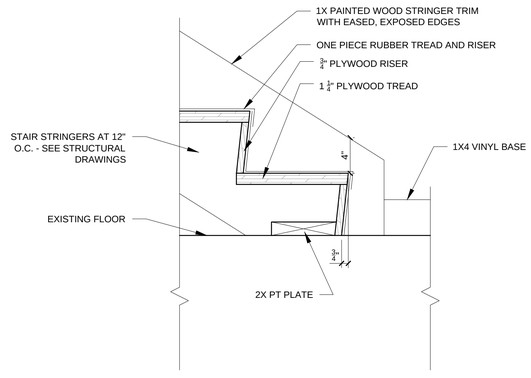


1 SECTION DETAIL AT BOTTOM STAIR TREAD
1 1/2" = 1'-0"

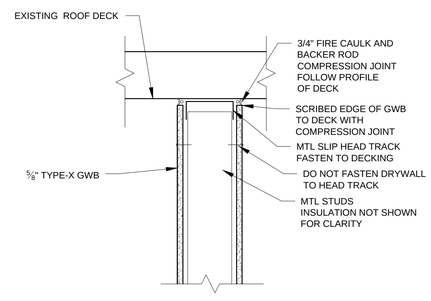


4 TYPICAL TOP OF INTERIOR NON-LOAD BEARING WALL DETAIL
1 1/2" = 1'-0"

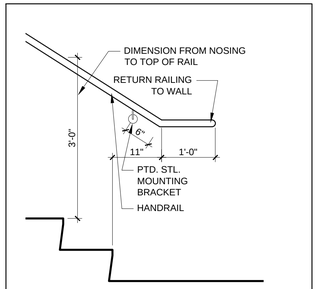


5 HANDRAIL DETAIL AT TOP OF BOTTOM
1-1/2" = 1'-0"

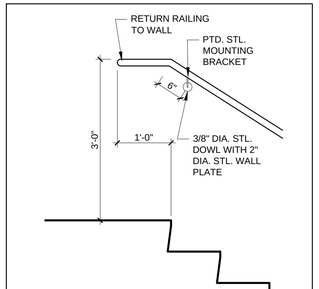


6 HANDRAIL DETAIL AT TOP OF STAIR
1-1/2" = 1'-0"

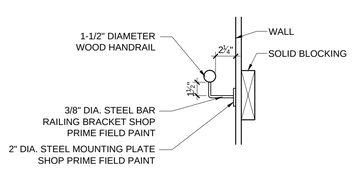


7 TYPICAL HANDRAIL DETAIL AT WALL
1-1/2" = 1'-0"

REGISTERED ARCHITECT
RYAN J. SENATORE
No. 3322
STATE OF MAINE

© 2017 RYAN SENATORE ARCHITECTURE

# RISING TIDE BREWING - EXPANSION

103 FOX STREET
PORTLAND, MAINE 04101

RSA
RYAN SENATORE
ARCHITECTURE
565 CONGRESS STREET
PORTLAND, MAINE 04101
207-650-6414
senatorearchitecture.com

CONSULTANTS:

REVISIONS:

| | |
|---|---|
| DATE: | MAY 12, 2017 |
| PROJECT No. | 1718 |
| DRAWN BY: | JPF |
| CHECKED BY: | RJS |
| SCALE: | AS NOTED |

SHEET TITLE:
DETAILS

A5-0