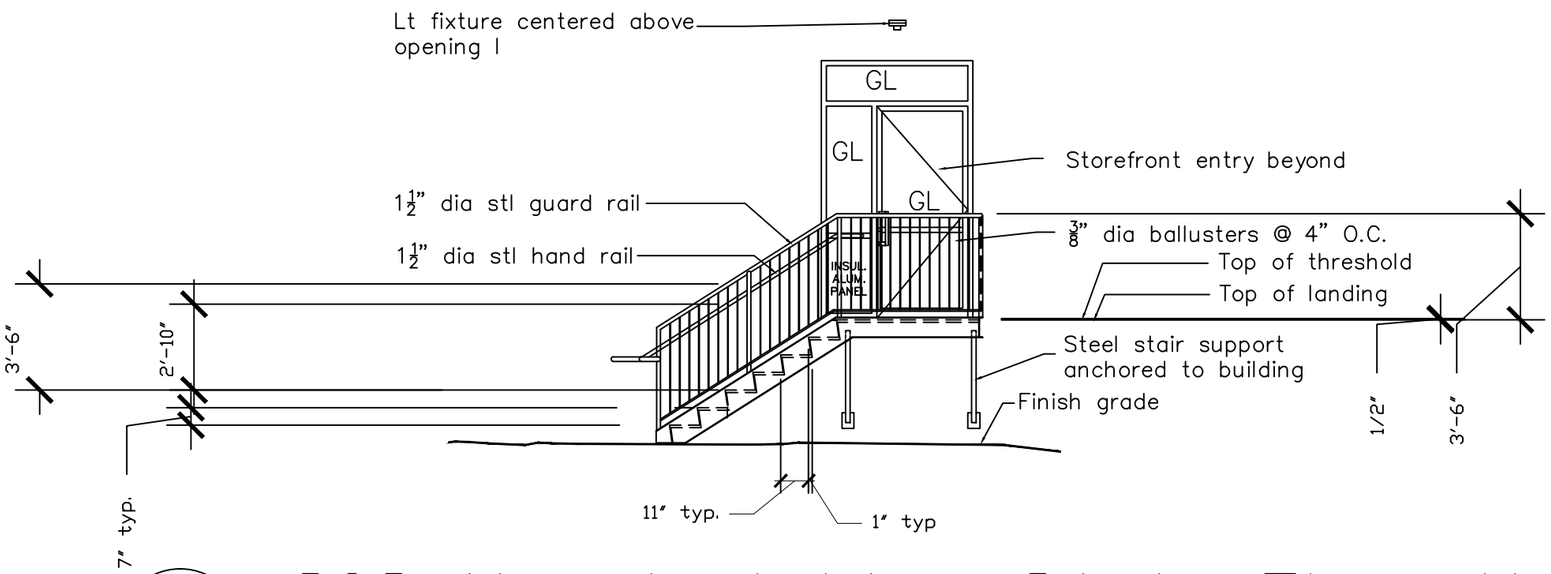

2 309 Marginal Way Stair Elevation

0 4 8 ft

⅜" dia ballusters @ 4" O.C. not shown for clarity.

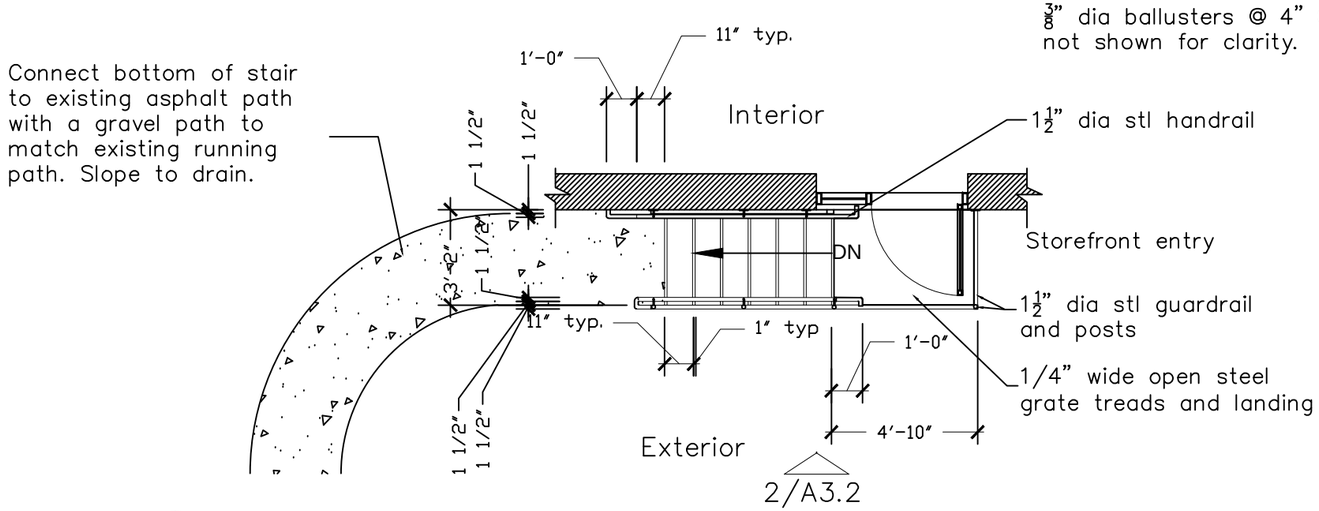

1 309 Marginal Way Stair Plan

~~10/10/12~~ ~~rev 10/29/12~~ rev 1/14/13

0 4 8 ft

Sheet A-3.2