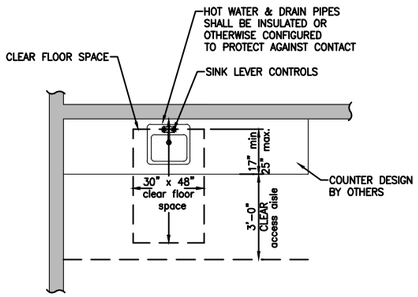

PLAN

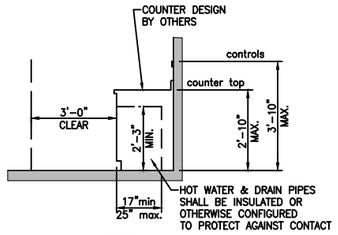

SECTION

TYPICAL COUNTER DIMENSIONS
(SEE ALSO KNEE & TOE CLEARANCES THIS SHEET)

NOTE:

ACCESSIBLE COUNTER CLEARANCE DIMENSIONS APPLY FOR ALL COUNTERS IN ACCORDANCE WITH 2010 ADA STANDARDS. (COUNTERS DESIGNED BY OTHERS)

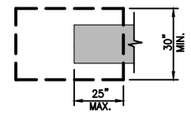

PLAN

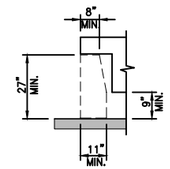

ELEVATION

KNEE AND TOE CLEARANCES

NOTES

SPACE UNDER AN ELEMENT BETWEEN 9" AND 27" ABOVE FINISHED FLOOR SHALL BE CONSIDERED MINIMUM KNEE CLEARANCE. KNEE CLEARANCE SHALL EXTEND 25" MAXIMUM UNDER AN ELEMENT AT 9" ABOVE FINISHED FLOOR. KNEE CLEARANCE WIDTH SHALL BE 30" MINIMUM.
WHERE KNEE CLEARANCE IS REQUIRED UNDER AN ELEMENT AS A REQUIRED CLEAR FLOOR SPACE, THE KNEE CLEARANCE SHALL BE 11" DEEP MINIMUM AT 9" ABOVE FINISHED FLOOR AND 8" DEEP MINIMUM AT 27" ABOVE FINISHED FLOOR.

SPACE UNDER AN ELEMENT BETWEEN THE FINISHED FLOOR AND 9" ABOVE THE FINISHED FLOOR SHALL BE CONSIDERED TOE CLEARANCE. WHERE TOE CLEARANCE IS REQUIRED AS PART OF A CLEAR FLOOR SPACE, THE TOE CLEARANCE SHALL EXTEND 17" MINIMUM UNDER THE ELEMENT. TOE CLEARANCE WIDTH SHALL BE 30" MINIMUM.

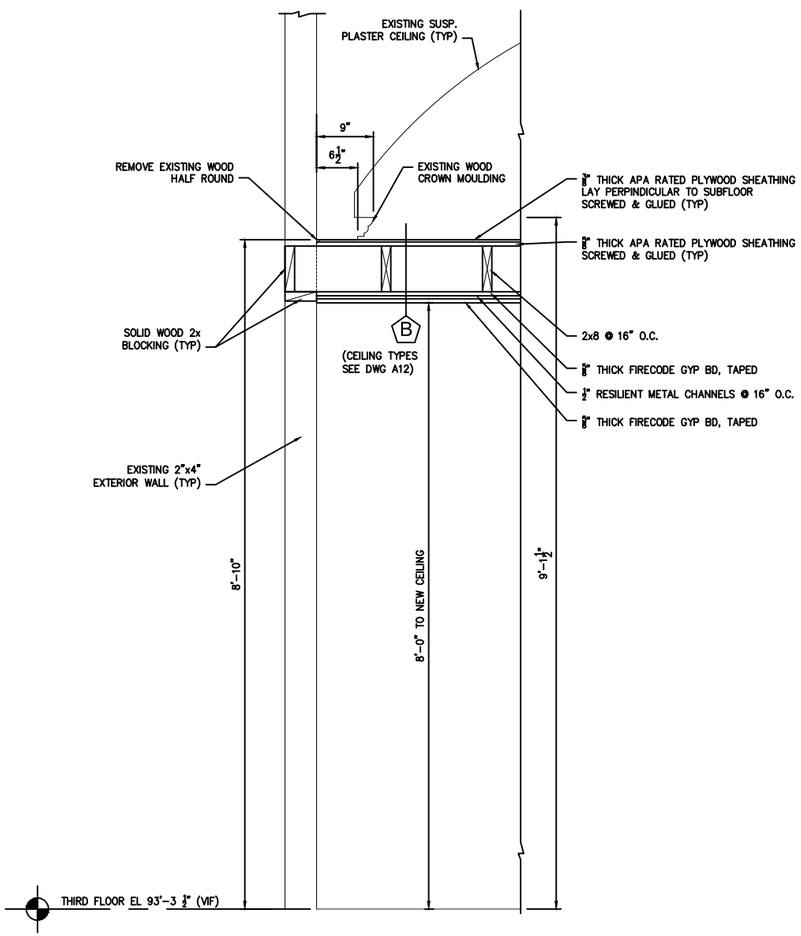

SECTION 4 A4/A7
1" = 1'-0"

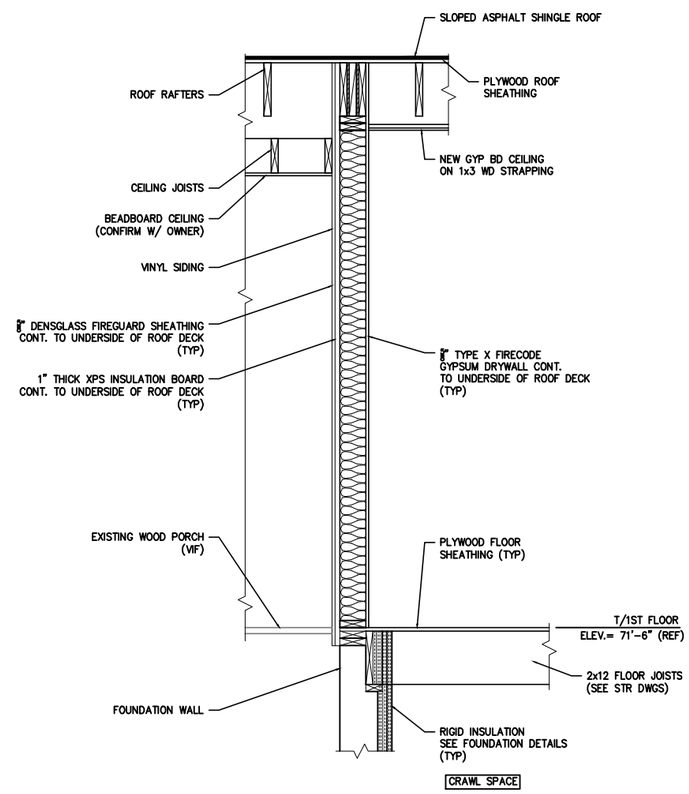

SECTION 7 A2/A3
1" = 1'-0"

REGISTERED ARCHITECT JOHN H. LEASURE No. 310 STATE OF MAINE

REV.	DATE	STATUS
0	4-8-13	STATE FIRE MARSHAL SUBMISSION
1	4-25-13	ISSUED FOR PERMIT

JOHN H. LEASURE ARCHITECT, INC.
6 Q STREET
SOUTH PORTLAND, MAINE 04106

ETZ CHAIM SYNAGOGUE
267 CONGRESS STREET
PORTLAND, MAINE

DETAILS

A15