General Mechanical Notes
1. Kitchen Hood exhaust ductwork shall be constructed of 16 gauge black iron with welded construction per NFPA96. Provide bolted and gasketted cleanout doors as required. Exhaust ductwork shall be wrapped with two (2) layers of 1½" thick Fyrewrap Elite or Unifrax ceramic insulation, suitable for zero clearance to combustibles.
2. Gas water heater venting shall be Centratherm, or equal, polypropylene.
3. Provide combination fire / smoke dampers (FD / SD) at all locations where the ducts penetrate the shaft wall enclosure for ducts that penetrate two (2) or more floors (except grease ducts). For ducts that only penetrate one (1) floor, fire dampers are required.
4. Concealed supply ductwork shall be insulated with 2" thick fiberglass ductwrap w/ FSK.
5. Domestic hot and cold water piping shall be insulated with 1" thick fiberglass pipe insulation.
6. Coordinate exposed ductwork with the lighting plan.

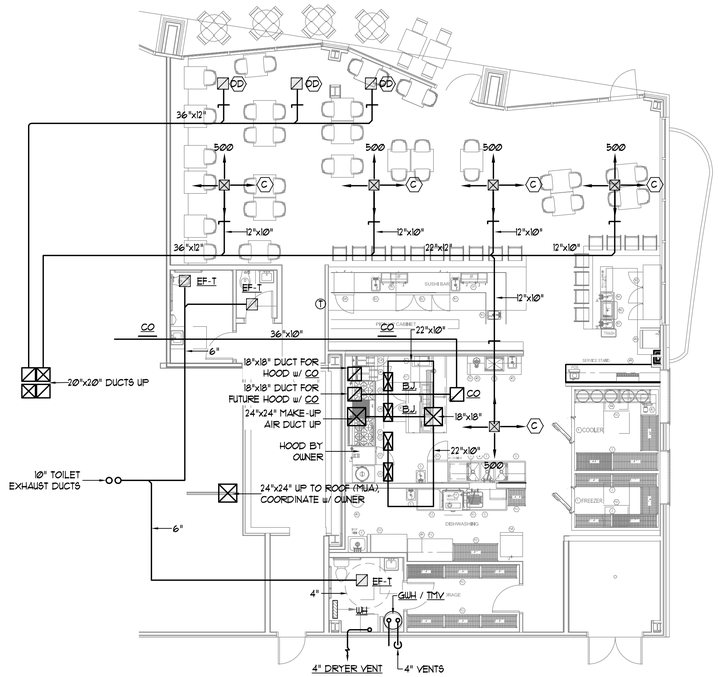

General Notes
1. BJ. means "Between Joists".

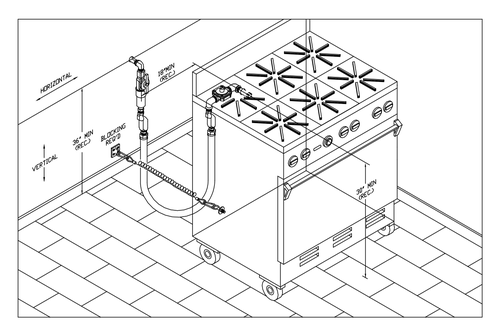

Gas Hose Connection Detail @ Kitchen Appliances
SCALE None

STATE OF MAINE
STEPHEN J. DUBOIS
No. 13607
LICENSED PROFESSIONAL ENGINEER

Reviewed for Code Compliance
Inspection Division
Department of Building Inspection
Date: 01/10/18

Prepared For:
Archetype
Union Wharf
Portland, ME 04101

Consultant:
BENNETT ENGINEERING
MECHANICAL • ELECTRICAL
(207) 865-9475

Architect:
ARCHETYPE Architects
48 Union Wharf Portland, Maine 04101
(207) 772-6022 ARCHETYPE@ARCHETYPEPA.COM

Project:
16 MIDDLE STREET
OFFICE BUILDING
MIDDLE STREET
PORTLAND, MAINE

Revisions:

Scale:
1/8"=1-0" U.N.O.

Date:
13 APR 2017

BenKay Restaurant
HVAC 1st FLOOR PLAN

M1.02