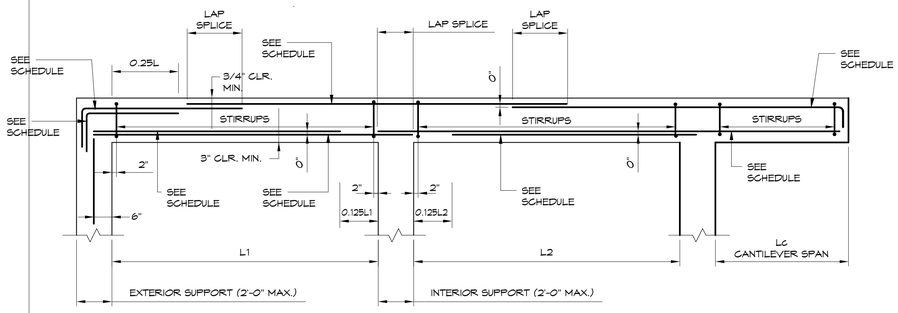

NOTES:
1. USE ACI REQUIREMENTS FOR THE MINIMUM COVER OF REINF.
2. PROVIDE 2-#6 T&B HORIZ MIN., UNLESS NOTED OTHERWISE.
3. "L" SHALL BE THE LARGER OF "L1" OR "L2".

1 CONCRETE GRADE BM DETAIL
3/4" = 1'-0"

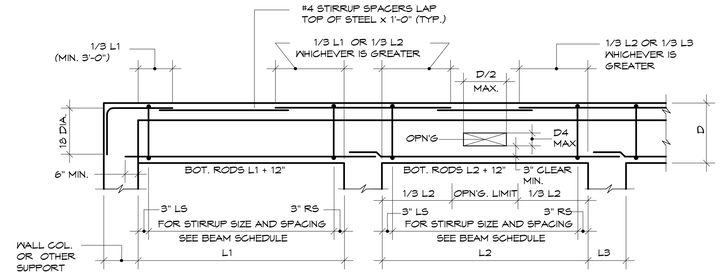

2 TYP. BEAM ELEVATION
3/4" = 1'-0"

GRADE BEAM SCHEDULE							
MARK	WIDTH x DEPTH WXD	BOTT. REINF. CONTINUOUS	TOP REINF. SUPPORT	STIRRUPS			REMARKS
				TYPE	SIZE	SPACING	
GB1	14"x54"	X	X		X	X	
GB2	14"x24"	X	X		X	X	
GB3	14"x36"	X	X		X	X	
GB4	14"x84"	X	X		X	X	HORIZ. SIDE BARS XX O.C. EF

3 GRADE BEAM SCHEDULE
1/8" = 1'-0"

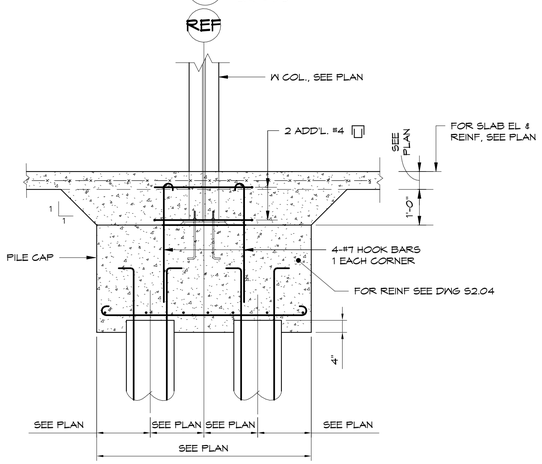

4 SECTION
1/2" = 1'-0"

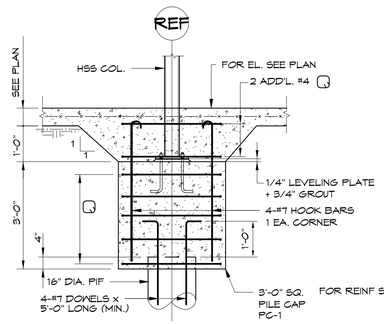

5 SECTION
1/2" = 1'-0"

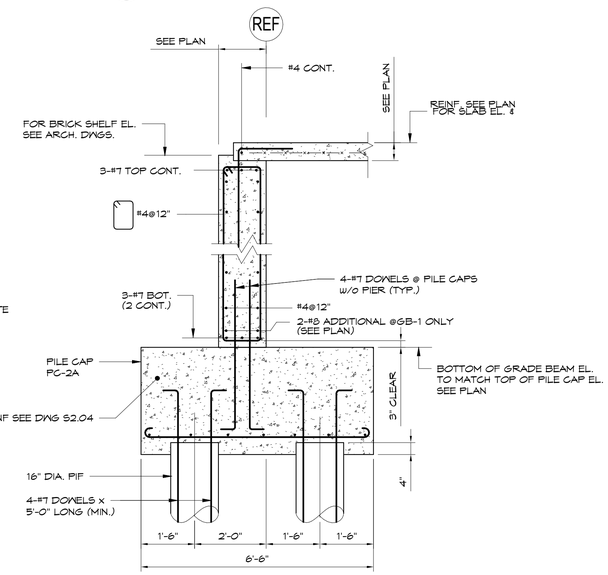

6 SECTION
1/2" = 1'-0"

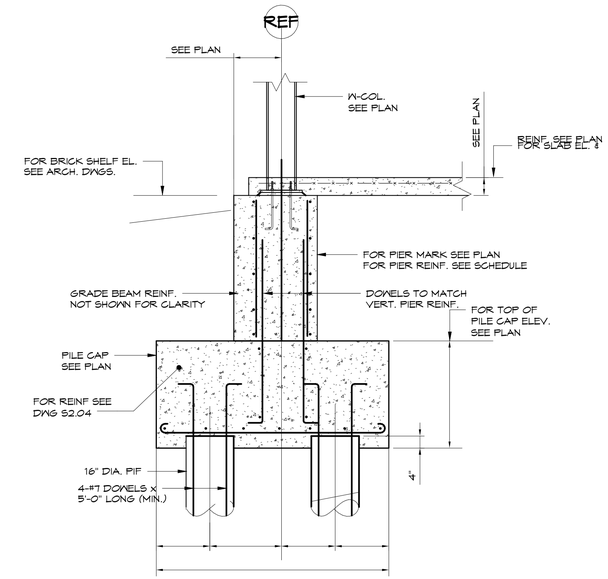

7 SECTION
1/2" = 1'-0"

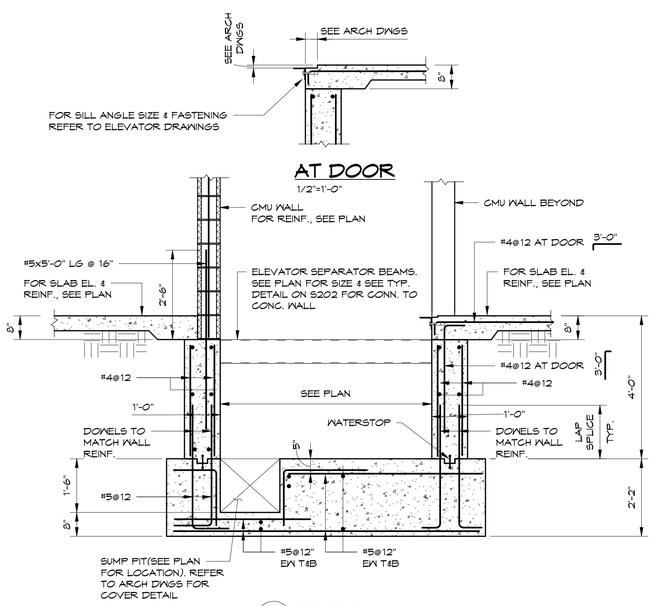

8 SECTION
1/2" = 1'-0"

Prepared For:
BATEMAN PARTNERS, LLC
P.O. BOX 7486
Portland, ME 04112

Consulting Engineer:
VEITAS and VEITAS engineers
638 Granite Street, Suite 101
Braintree, Massachusetts 02184
TEL (781)843-2063 FAX (781)849-2065

Architect:
ARCHETYPE architects
48 Union Wharf Portland, Maine 04101
(207) 772-6022 Fax (207) 772-4056

Project:
16 MIDDLE STREET
MIDDLE STREET
PORTLAND, MAINE

Revisions:
01/15/16 ISSUED FOR FDN. PERMIT
06/03/16 ISSUED FOR BUILDING PERMIT

Date: 01/15/16
Scale:
FOUNDATION SECTIONS & DETAILS

S4.01