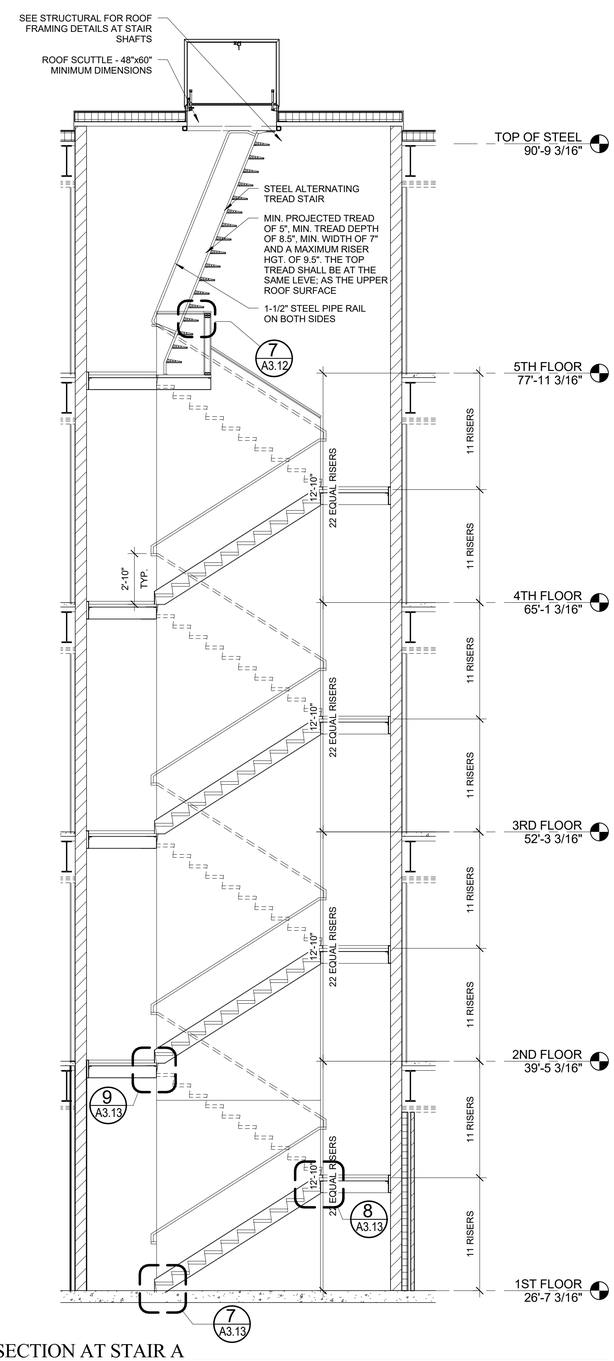

6 SECTION AT STAIR A
1/4" = 1'-0"

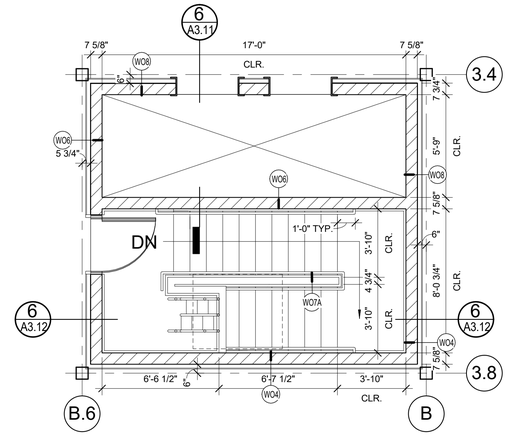

5 FIFTH FLOOR PLAN AT STAIR A
1/4" = 1'-0"

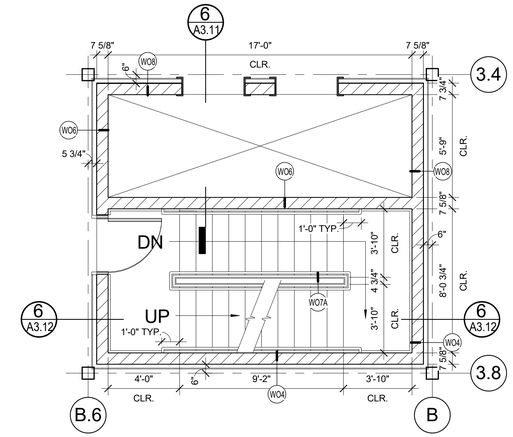

3 THIRD FLOOR PLAN AT STAIR A
1/4" = 1'-0"

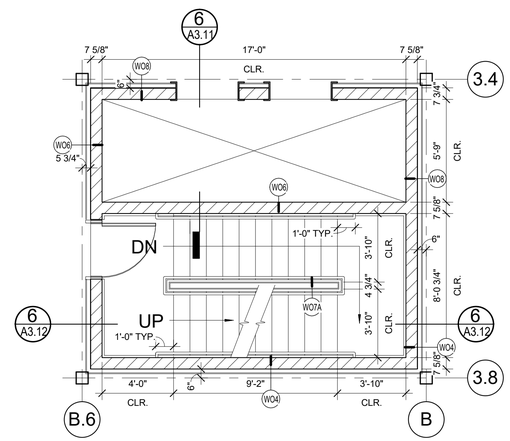

4 FOURTH FLOOR PLAN AT STAIR A
1/4" = 1'-0"

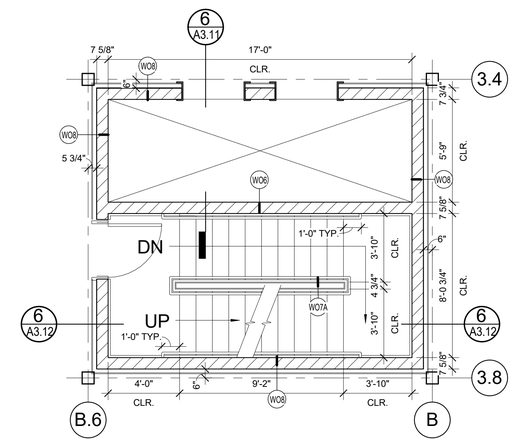

2 SECOND FLOOR PLAN AT STAIR A
1/4" = 1'-0"

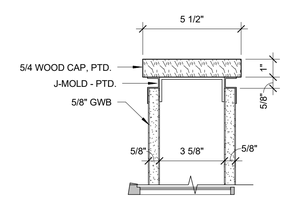

7 STAIR WALL DETAIL
3" = 1'-0"

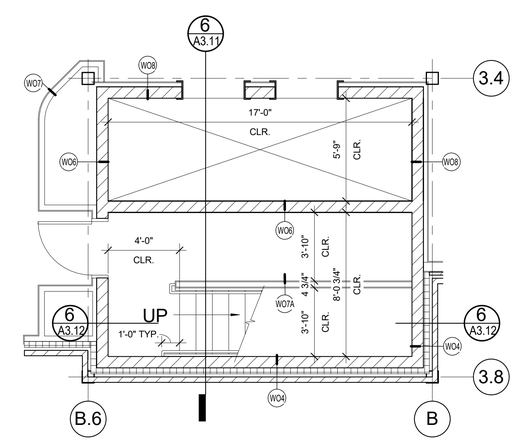

1 FIRST FLOOR PLAN AT STAIR A
1/4" = 1'-0"

06.03.15 - FOR PERMIT

REGISTERED ARCHITECT WILLIAM KENNETH HOPKINS No. 1050 STATE OF MAINE

Prepared For: 16 Middle Street Associates, LLC

Consultant:

Architect: ARCHETYPE architects
48 Union Wharf Portland, Maine 04101
(207) 772-6022 ARCHETYPE@ARCHETYPEPA.COM

Project: 16 Middle Street
16 Middle Street Portland, Maine

Revisions:

Scale: As indicated

Date: June 3, 2016

Stair Sections and Details

A3.12