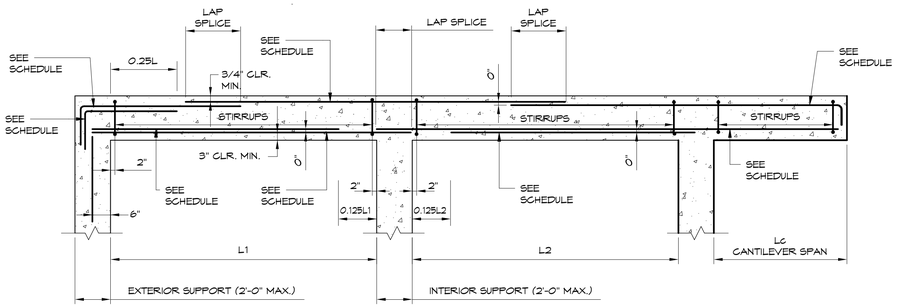

NOTES:
1. USE ACI REQUIREMENTS FOR THE MINIMUM COVER OF REINF.
2. PROVIDE 2-#6 T&B HORIZ MIN., UNLESS NOTED OTHERWISE.
3. "L" SHALL BE THE LARGER OF "L1" OR "L2".

1 CONCRETE GRADE BEAM DETAIL
3/4" = 1'-0"

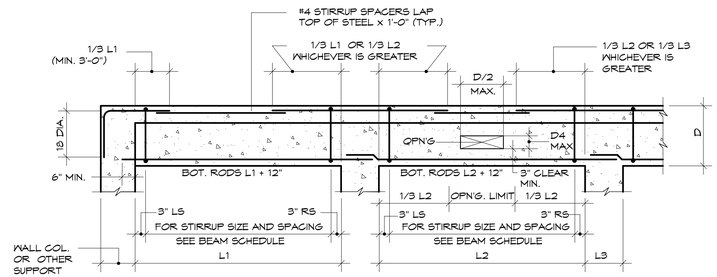

2 TYPICAL BEAM ELEVATION
3/4" = 1'-0"

GRADE BEAM SCHEDULE							
MARK	WIDTH x DEPTH WxD	BOTT. REINF. CONTINUOUS	TOP REINF. SUPPORT	STIRRUPS			REMARKS
				TYPE	SIZE	SPACING	
GB1	14"x54"	3-#7	2-#8		#3	18"	
GB2	14"x24"	3-#7	2-#8		#3	10"	
GB3	14"x36"	3-#10	2-#6		#3	16"	
GB4	14"x84"	3-#8	2-#8		#3	20"	HORIZ. SIDE BARS #5@12" O.C. EF

3

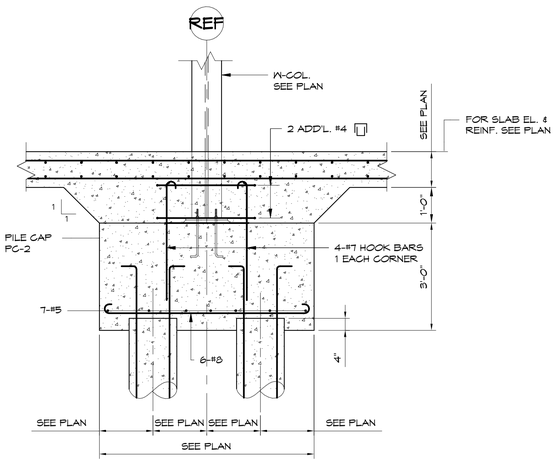

4 SECTION
1/2" = 1'-0"

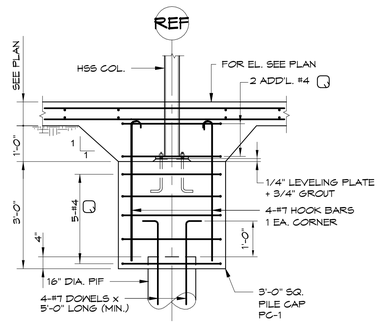

5 SECTION
1/2" = 1'-0"

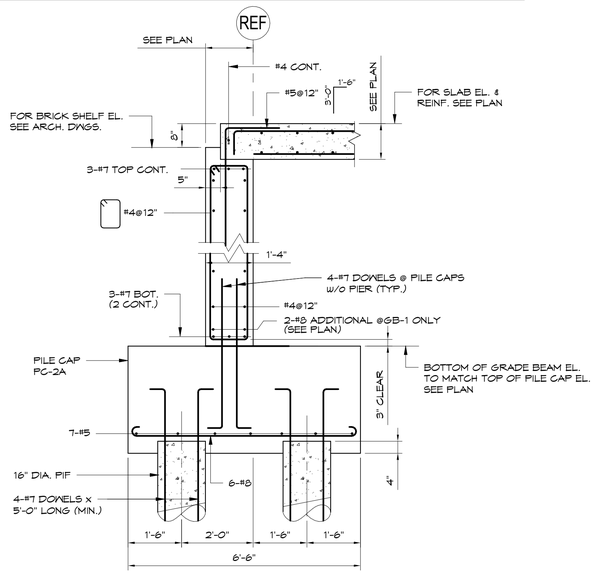

6 SECTION
1/2" = 1'-0"

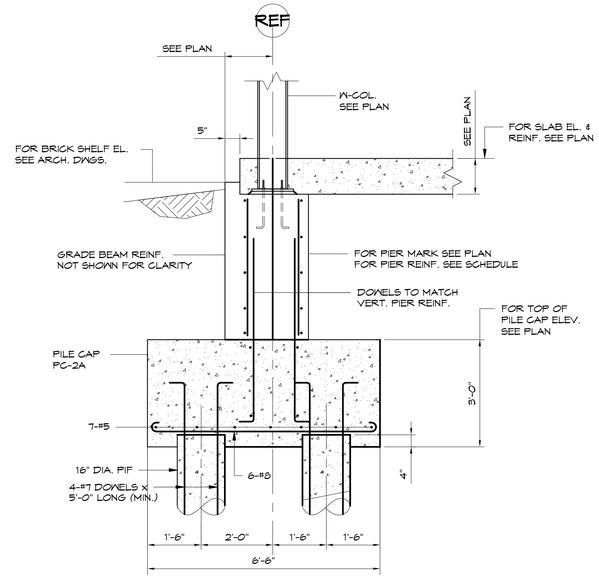

7 SECTION
1/2" = 1'-0"

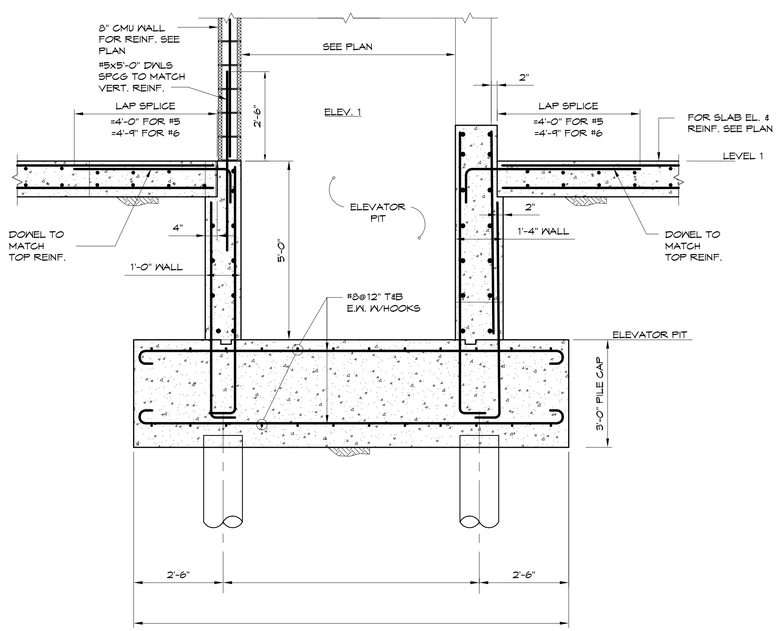

8 SECTION AT ELEVATOR PIT
1/2" = 1'-0"

STATE OF MAINE
RIMANTAS M. VEITAS
No. 9477
LICENSED PROFESSIONAL ENGINEER

Prepared For:
BATEMAN PARTNERS, LLC
P.O. BOX 7486
Portland, ME 04112

Consulting Engineer:
VEITAS and VEITAS engineers
630 Granite Street, Suite 101
Braintree, Massachusetts 02184
TEL (781) 843-2063 FAX (781) 849-2065

Architect:
ARCHETYPE architects
48 Union Wharf Portland, Maine 04101
(207) 772-6022 Fax (207) 772-4056

Project:
16 MIDDLE STREET
MIDDLE STREET
PORTLAND, MAINE

Revisions:
01/15/16 ISSUED FOR FDN. PERMIT

Scale:

Date: 01/15/16

FOUNDATION SECTIONS & DETAILS

S4.01