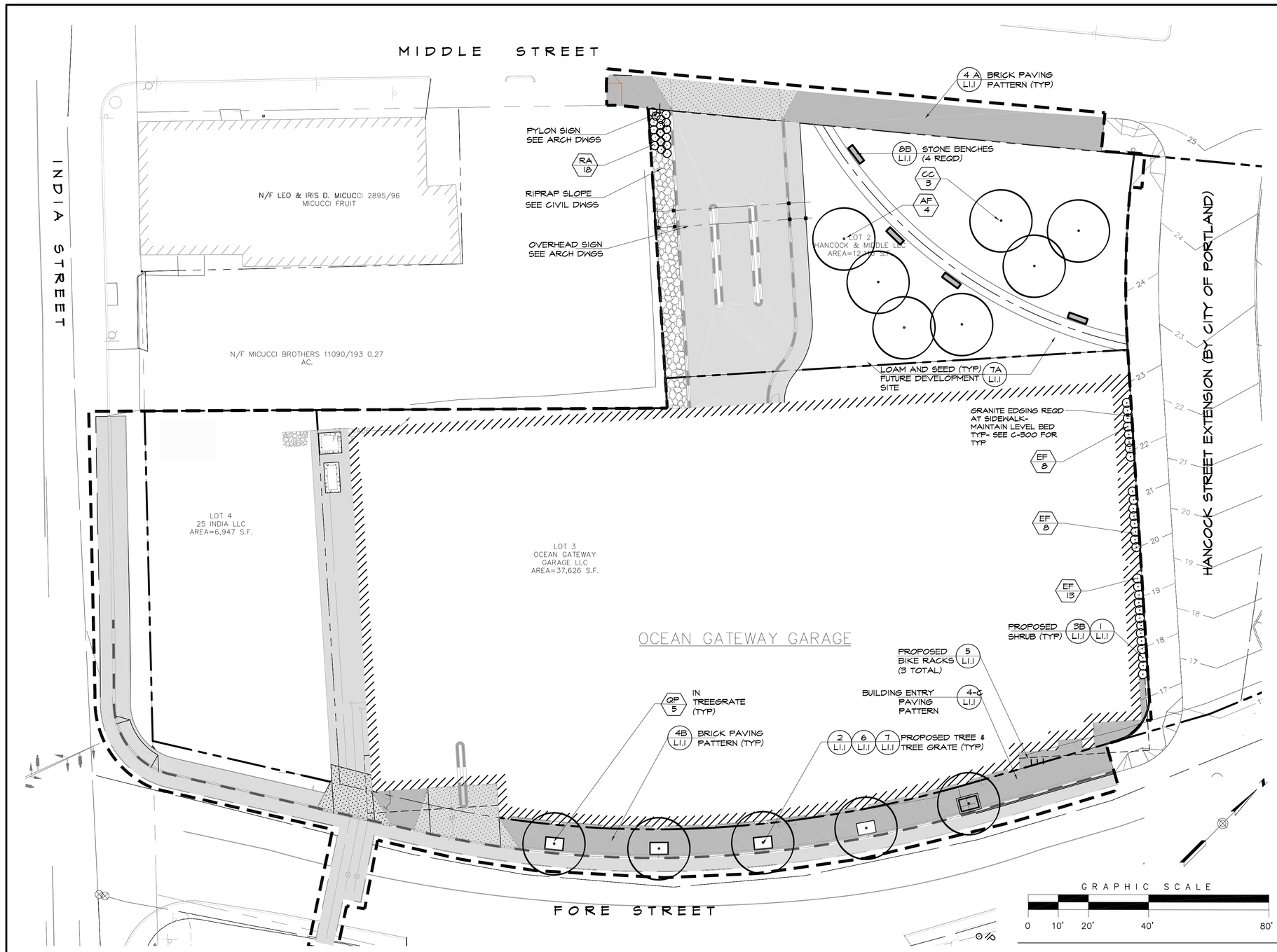

PLANT SCHEDULE

QUANTITY	SYM.	BOTANICAL NAME/ COMMON NAME	SIZE	CONDITION
L1.2				
3	CC	CORYLUS COLURNA TURKISH FILBERT	2.5" CAL	B&B
4	AF	ACER FREEMANII FREEMAN MAPLE	2.5" CAL	B&B
5	QP	QUERCUS PALUSTRIS PIN OAK	4.5" CAL	B&B
29	EF	EUONYMUS FORTUNEI WINTERCREEPER EUONYMUS	18-24"	CONT
18	RA	RHUS AROMATICA 'LOW-GROW' LOW GROW SUMAC	18-24"	CONT

LANDSCAPE NOTES

1. THE LANDSCAPE CONTRACTOR IS ADVISED OF THE EXISTANCE OF UNDERGROUND UTILITIES. CONTRACTOR SHALL VERIFY UTILITIES PRIOR TO COMMENCING DIGGING OPERATIONS.
2. THE CONTRACTOR SHALL BE RESPONSIBLE FOR REPAIRING ANY UTILITIES, WALKS, PAVING, CURBING, ETC DAMAGED IN PERFORMANCE OF THIS JOB AT NO COST TO THE OWNER.
3. CONTRACTOR SHALL FURNISH AND PLACE 12" OF LOAM UNDER ALL SHRUB BEDS, 30" IN ALL TREE PITS, AND 6" IN ALL LAWN AREAS. COORDINATE ALL SUBGRADE PREPARATION PRIOR TO PLACING LOAM.
4. ALL PLANT MATERIALS SHALL MEET THE SPECIFICATIONS OF THE "AMERICAN STANDARDS FOR NURSERY STOCK", BY THE AMERICAN NURSERYMAN'S ASSOCIATION, LATEST EDITION.
5. ALL PLANTING SHALL BE COMPLETED IN ACCORDANCE WITH ACCEPTABLE HORTICULTURAL PRACTICES, INCLUDING PROPER BED PREPARATION, SOIL MIX, PRUNING, STAKING, WRAPPING, AND OTHERMAINTENANCE UNTIL ACCEPTED BY THE OWNER.
6. ALL GRASS, DEBRIS, AND OTHER EXTRANEOUS MATERIALS SHALL BE REMOVED FROM THE PLANTING AREAS PRIOR TO INSTALLATION OF PLANT MATERIALS.
7. ALL PLANTS SHALL BE LOCATED IN ACCORDANCE WITH THE PLANS. ANY DEVIATION FROM THESE PLANS SHALL BE APPROVED BY THE OWNER AND LANDSCAPE ARCHITECT PRIOR TO PLANTING.
8. CONTRACTOR SHALL SUPPLY QUANTITIES OF PLANTS SUFFICIENT TO COMPLETE THE WORK INDICATED ON THE PLAN. ANY DISCREPANCY BETWEEN THE PLANT LIST AND PLAN SHALL NOT ENTITLE THE CONTRACTOR TO ADDITIONAL REMUNERATION.
9. NO LANDSCAPING SHALL BE INSTALLED UNTIL FINAL GRADING AND CONSTRUCTION HAS BEEN COMPLETED IN THE IMMEDIATE AREA.
10. PLANTING SOIL MIX FOR PERENNIAL, ANNUAL, OR GROUNDCOVER BEDS SHALL CONSIST OF FOUR PARTS TOPSOIL, TWO PARTS COMPOST, AND ONE PART PERLITE. ROTOTILL TO A DEPTH OF 8" MINIMUM.
11. ALL SHRUB BEDS SHALL BE MULCHED WITH 3" MINIMUM OF CLEAN, SHREDDED, AGED, DARK BARK MULCH.

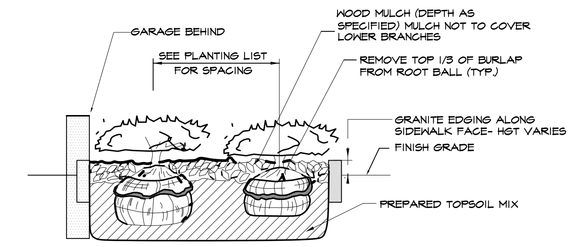

1 SHRUB/ GROUND COVER PLANTING DETAIL
NOT TO SCALE

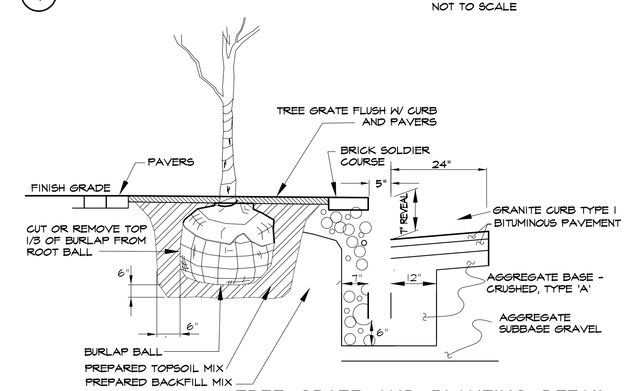

2 TREE GRATE AND PLANTING DETAIL
NOT TO SCALE

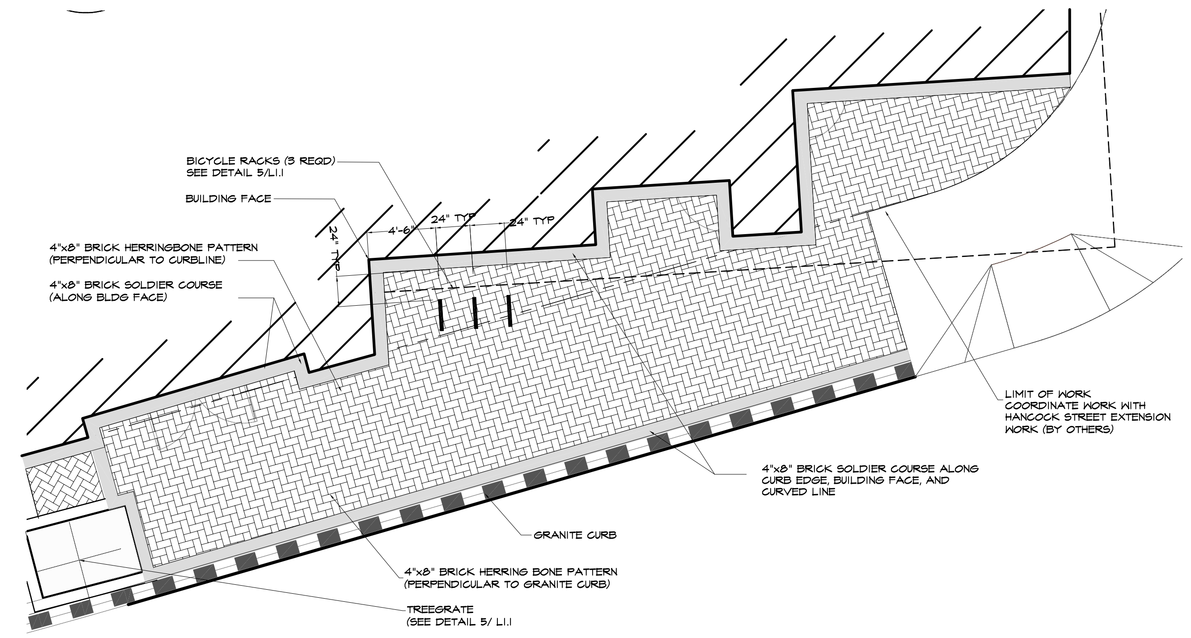

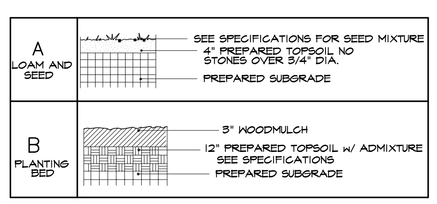

3 SCHEDULE OF SURFACES / DETAIL
NOT TO SCALE

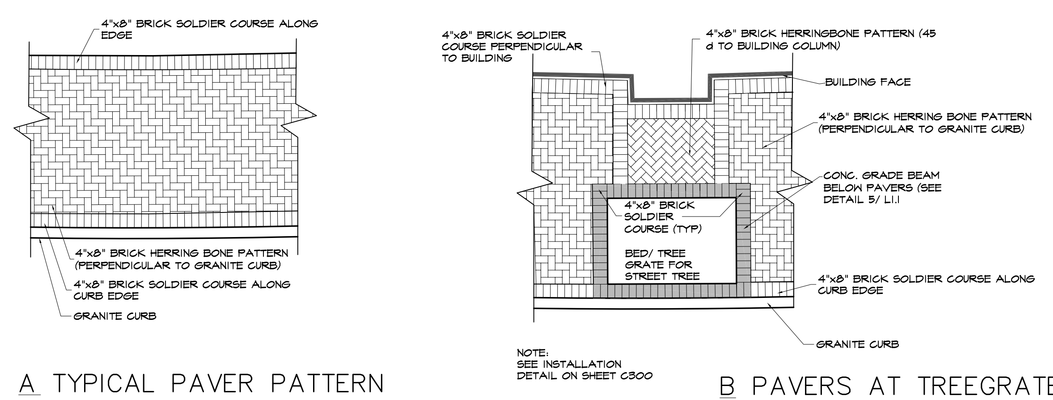

4 TYPICAL SIDEWALK PAVING PATTERNS
NOT TO SCALE

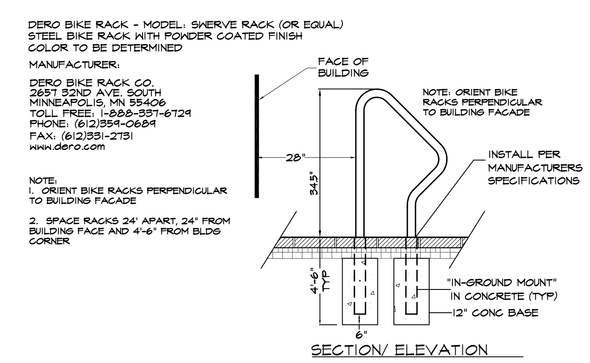

5 BICYCLE RACK INSTALLATION DETAIL
NOT TO SCALE

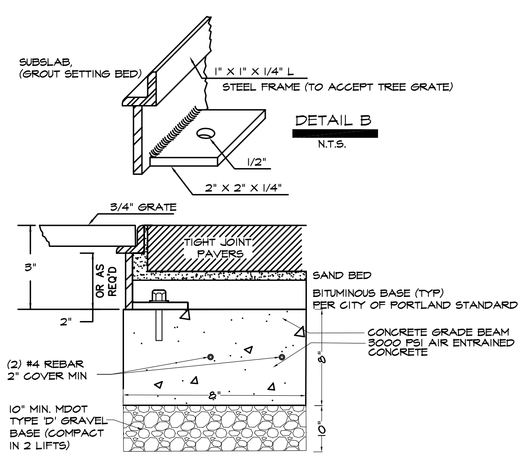

6 TREE GRATE FRAME ANCHORING DETAIL
NOT TO SCALE

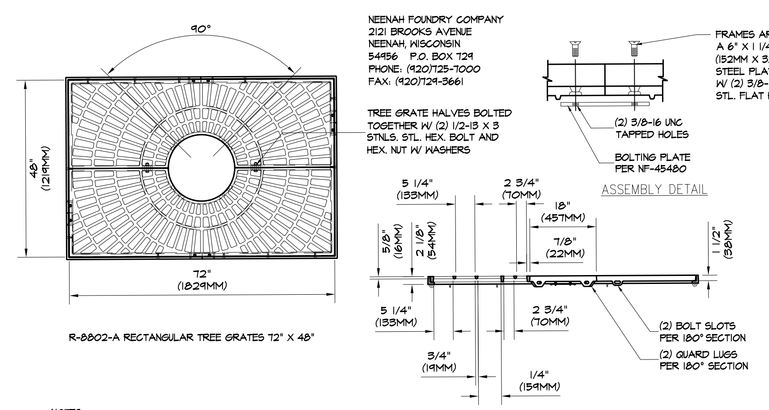

NOTES:
1. INSTALLATION TO BE COMPLETED IN ACCORDANCE WITH MANUFACTURER'S SPECIFICATIONS.
2. DO NOT SCALE DRAWINGS.
3. CONTRACTORS NOTE: FOR PRODUCT AND PURCHASING INFORMATION VISIT www.CADdetails.com/info REFERENCE NUMBER 071-0065.

7 TREE GRATE DETAIL
NOT TO SCALE

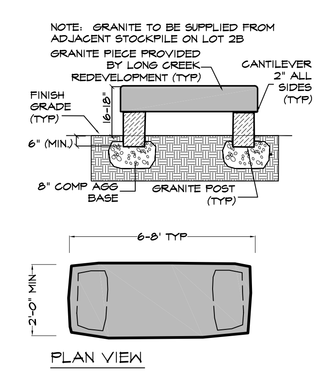

8 GRANITE BENCH DETAILS
NOT TO SCALE

LICENSED LANDSCAPE ARCHITECT
PATRICK J. CARROLL
NO. 127
STATE OF MAINE

OCEAN GATEWAY PARKING GARAGE

MIDDLE STREET
PORTLAND, ME

RIVERWALK LLC
2 MARKET STREET, SUITE 500
PORTLAND, ME 04101

ARCHITECT:
SCOTT SIMONS ARCHITECTS
75 YORK ST.
PORTLAND, MAINE 04101
phone: 207-112-4656
fax: 207-828-4656
http://www.simonsarchitects.com

CONSULTANTS:
STRUCTURAL ENGINEER:
SIMON DESIGN ENGINEERING
44 WASHINGTON ST.
WELLESTEY, MA. 02481
phone 781-237-2226

SITE ENGINEER:
WOODARD AND CURRAN, INC.
41 HUTCHINS DRIVE
PORTLAND, ME 04102
phone 207-114-2112

LANDSCAPE ARCHITECT:
CARROLL ASSOCIATES
75 MARKET STREET
PORTLAND, ME 04101
phone 207-112-1552

Job No.: -
Date: FEBRUARY 22, 2004
Scale: 1"= 20'-0"
Drawn by: GH/PC
Checked by: PC

Drawing Title:

LANDSCAPE PLAN & PAVING DETAILS

L1.1

CONSTRUCTION SET