POTTER
The Symbol of Protection

PAD100

Dual Input

Reviewed for Code Compliance
Inspections Division
Approved with Conditions
Date: 02/28/18

Features

- Single module with dual contact monitoring inputs
- Two (2) Class B or one (1) Class A monitoring inputs
- SLC Class A, Class X & Class B
- Mounts in a standard 4" or double gang box
- Wiring terminals accessible when mounted in box
- All wiring terminals accept 22 to 12 AWG
- Product includes a 5 year warranty

NOTE: This addressable module does not support 2-wire smoke detectors.

Description

The PAD100-DIM uses one (1) SLC loop address when monitoring two (2) Class B circuits or one (1) Class A circuit. The module mounts on either a 4" square or double gang box. The module is capable of monitoring two (2) separate class B circuits making it ideal for monitoring sprinkler waterflow and valve tamper switches when they are located in the same proximity. The PAD100-DIM includes one red LED to indicate the module's status. In normal condition, the LED flashes when the device is being polled by the control panel. When an input is activated, the LED will flash at a fast rate.

Application

The PAD100-DIM is compatible with Potter's IPA series addressable fire alarm control panels. The PAD100-DIM is an interface module used to monitor dry contact devices such as sprinkler waterflow, valve tamper switches, or conventional pull stations. The module is capable of monitoring two separate Class B or one Class A circuits.

Setting the Address

Each addressable SLC device must be assigned an address. The address is set using the DIP switch located on the PAD100-DIM. When the PAD100- DIM is used to monitor two individual Class B circuits a single device address is assigned, each input is then identified as a sub-point of the module address. For example, if the address number is assigned as "8", the first input will be "8.1" and the second input will be "8.2".

Before connecting a device to the SLC loop, take the following precautions to prevent potential damage to the panel or device:

1. Power to the device is removed.
2. Field wiring is correctly installed.
3. Field wiring has no open or short circuits.

Technical Specifications

Operating Voltage	24.0V
Max SLC Standby Current	240µA
Max SLC Alarm Current	240µA
Max Wiring Resistance of IDC	100 Ω
Max Wiring Capacitance of IDC	1µF
EOL Resistor	5.1K Ω
Operating Temperature Range	32 to 120ºF (0 to 49ºC)
Operating Humidity Range	0 to 93% (non-condensing)
Max no. of Module Per Loop	127 units
Dimensions	4.17" (106mm)L × 4.17" (106mm)W × 1.14" (29mm)D
Mounting Options	Standard 4" Square or Double Gang Box
Shipping Weight	0.6 lbs

Reviewed for Code Compliance
Inspections Division
Approved with Conditions
Date: 02/28/18

Installation Using Compatible Electrical Box

Fig 1

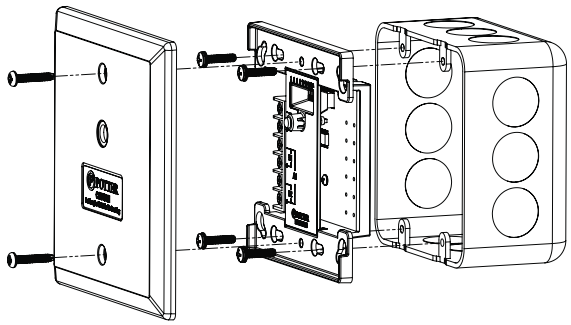

Wiring Diagrams

PAD100-DIM With One Class A Circuit

Fig 2

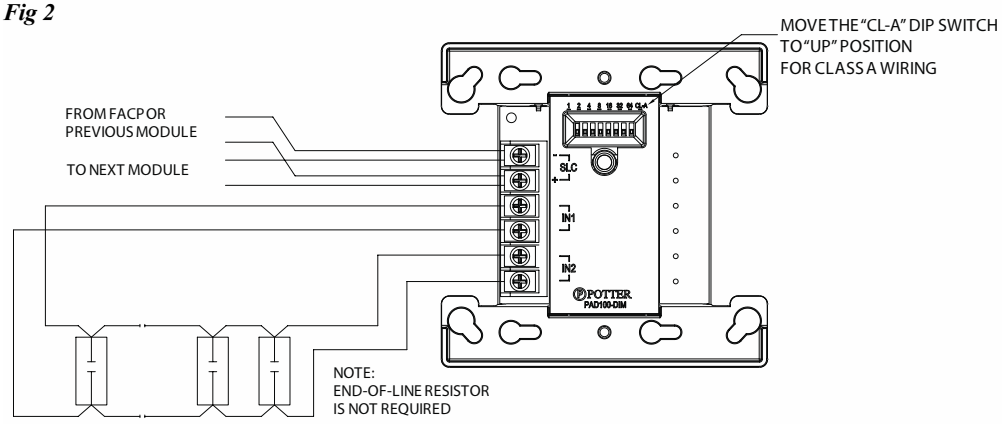

PAD100-DIM With Two Class B Circuits

Fig 3

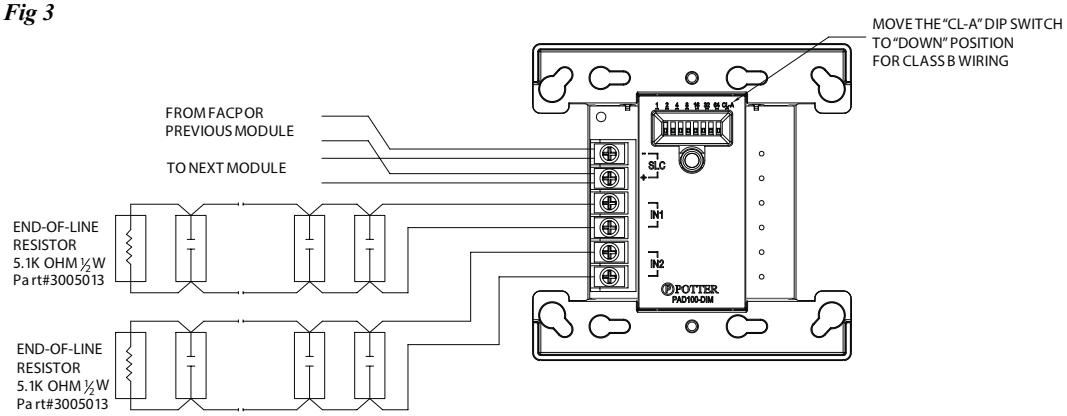

Ordering Information

Model	Description	Stock No.
PAD100-DIM	Dual Input Module	3992703