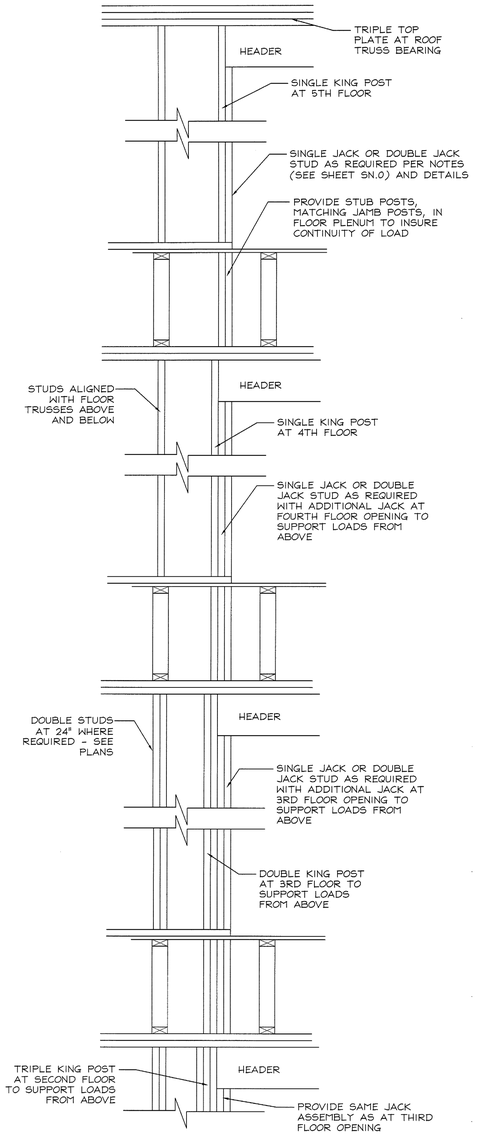

1 / S2.3 SCHEMATIC JAMB FRAMING AT STACKED OPENINGS
Scale: NOT TO SCALE

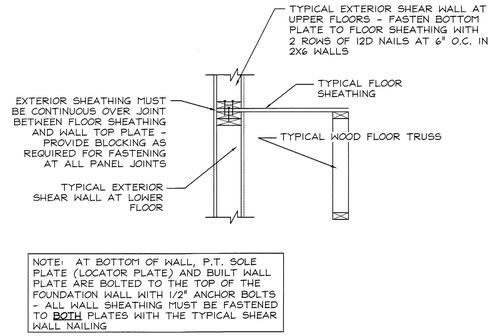

2 / S2.3 EXTERIOR SHEAR WALL SCHEMATIC
Scale: NOT TO SCALE

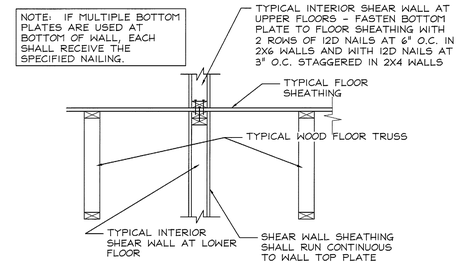

3 / S2.3 INTERIOR SHEAR WALL SCHEMATIC
Scale: NOT TO SCALE

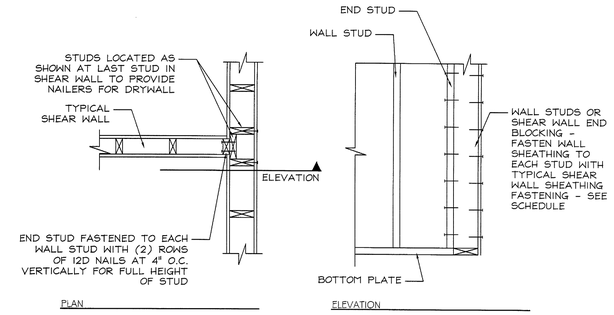

4 / S2.3 SHEAR WALL END NAILING SCHEMATIC
Scale: NOT TO SCALE

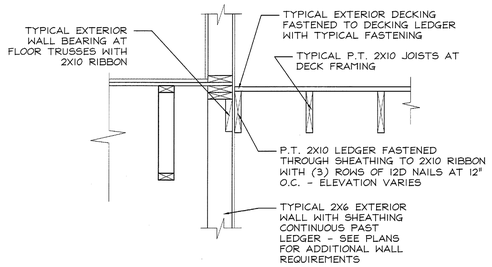

5 / S2.3 DECKING LEDGER AT DECK
Scale: 3/4" = 1'-0"

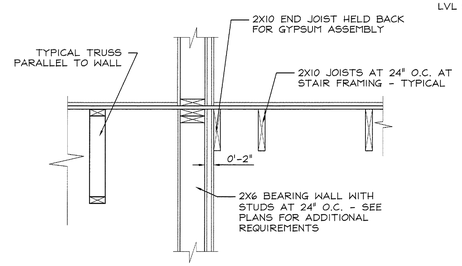

6 / S2.3 END JOIST AT STAIR FLOOR
Scale: 3/4" = 1'-0"

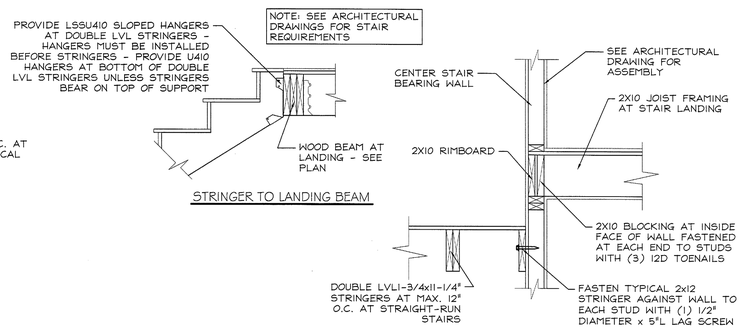

7 / S2.3 STAIR LANDING BEARING AT CENTER WALL
Scale: 3/4" = 1'-0"

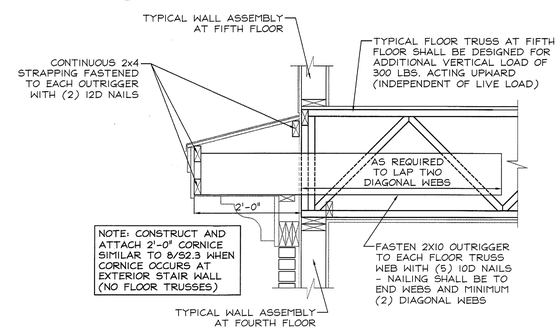

9 / S2.3 CORNICE DETAIL - OUTRIGGERS PARALLEL TO TRUSSES
Scale: 3/4" = 1'-0"

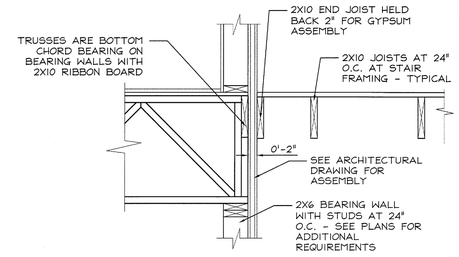

10 / S2.3 STAIR SHEATHING LEDGER AT FLOOR TRUSS BEARING
Scale: 3/4" = 1'-0"

FRAMER PLEASE NOTE: FASTEN STAIR STRINGERS TO STAIR WALLS WITH (2) 1/4" DIAMETER LAG SCREWS INTO STUDS AT 48" O.C. (EVERY OTHER STUD). PROVIDE 2" PENETRATION INTO WALL STUDS.

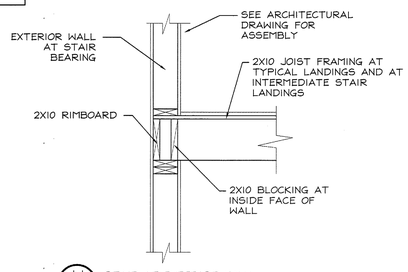

11 / S2.3 STAIR AT EXTERIOR WALL
Scale: 3/4" = 1'-0"

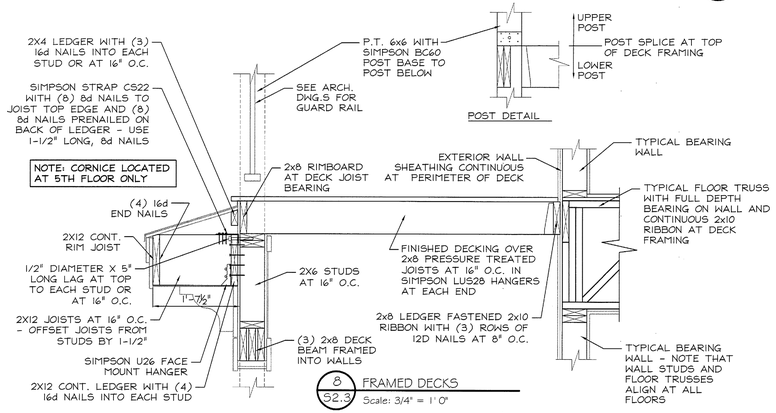

8 / S2.3 FRAMED DECKS
Scale: 3/4" = 1'-0"

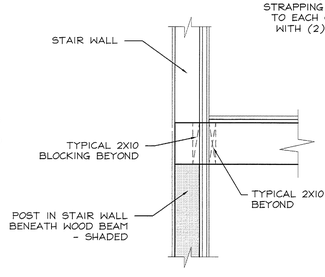

12 / S2.3 STAIR BEAM AND POST FRAMING AT STAIRS
Scale: 3/4" = 1'-0"

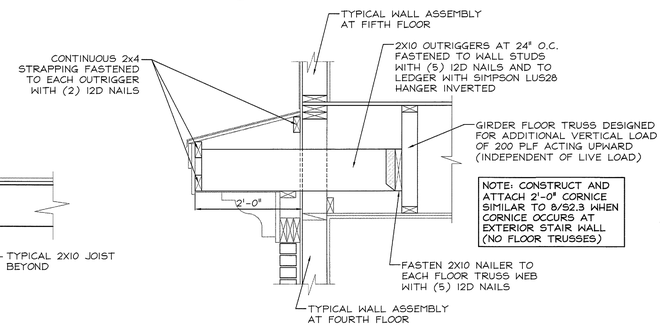

13 / S2.3 CORNICE DETAIL - OUTRIGGERS PERPENDICULAR TO TRUSSES
Scale: 3/4" = 1'-0"

STATE OF MAINE
JEFFREY S. NAWROCKI
No. 6044
LICENSED
PROFESSIONAL ENGINEER
7/15/08

JSN Associates, Inc.
Consulting Structural Engineers
One Autumn Street
Portsmouth, NH 03801
(603) 433 - 5639
Fax: (603) 431 - 2511
www.jsneng.com

DAVID M. WHITE, ARCHITECT
403 Tibbetts Hill Road
P. O. Box 447
Goffstown, New Hampshire 03045
(603) 497-3405

THE VILLAGE AT OCEAN GATE, LLC
GFI Partners
93 Pearl Street
Boston, MA 02110

THE BAY HOUSE
Middle Street
Portland, Maine

FLOOR FRAMING DETAILS
Phase I
Scale: As Noted
Commission No: 06-008
Date: July, 15, 2008

REVISIONS:

DRG. NO.
S2.3