Note
1. Pipe sizes vary by unit type. See ¼" scale plans.

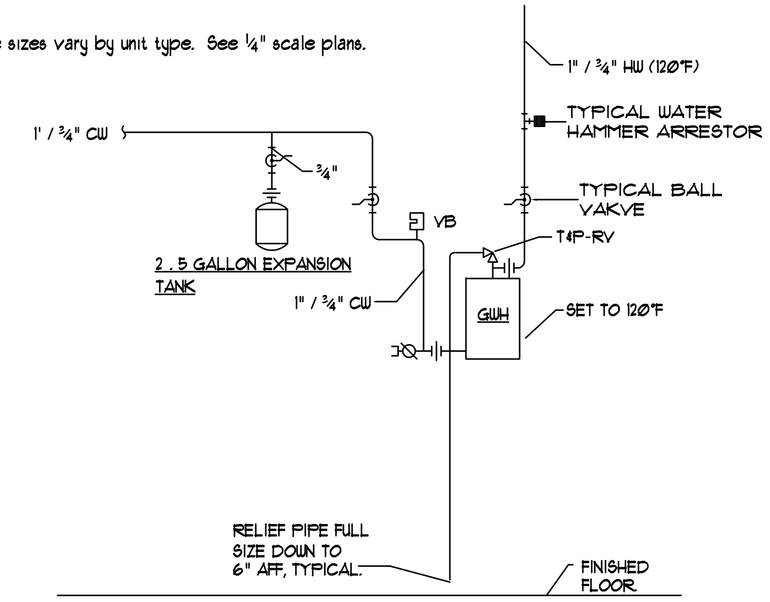

DOMESTIC HOT WATER PIPING SCHEMATIC

NTS

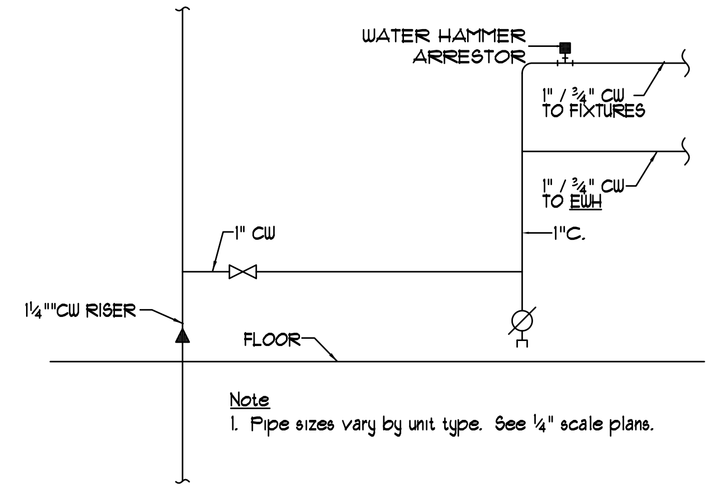

Note
1. Pipe sizes vary by unit type. See ¼" scale plans.

WATER SERVICE DETAIL @ CONDOMINIUM UNITS

NTS

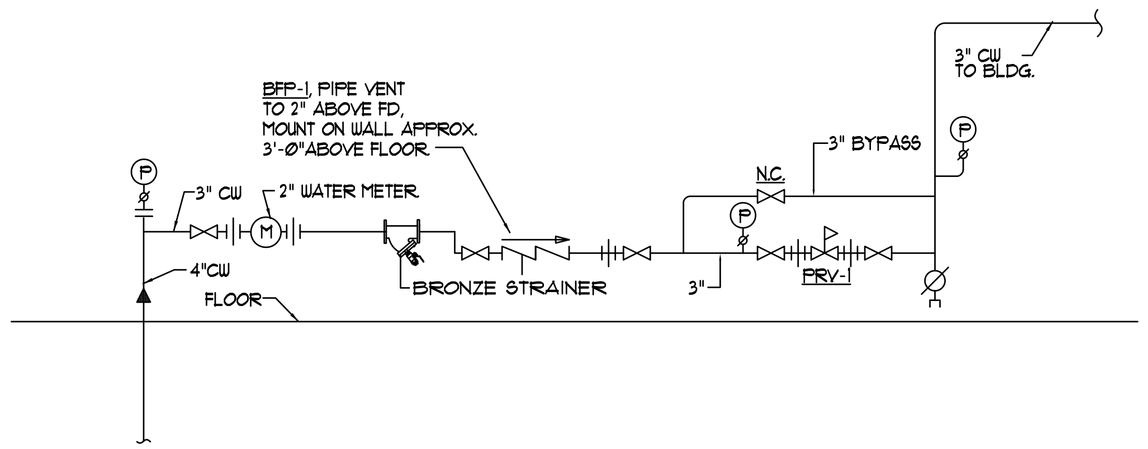

BUILDING WATER SERVICE ENTRANCE DETAIL

NTS

AIR DEVICE PERFORMANCE SCHEDULE

TAG	PANEL SIZE(IN)	NECK SIZE(IN)	AIRFLOW (CFM)	SP LOSS (IN.WG.)	THROW(L)	THROW(S)	Nc	BASIS OF DESIGN PRICE		
								DUCT CONN.(IN)	PATTERN	MODEL
A	-	6"	100	0.05	-	-	30	SEE DWGS	SEE DWGS	SMD-FR
B	-	8"ϕ	150	0.05	-	-	25	SEE DWGS	SEE DWGS	SMD-FR
C	-	12"ϕ	250	0.05	-	-	25	SEE DWGS	SEE DWGS	SMD-FR
D	-	14"x12"	600	0.05	-	-	25	SEE DWGS	SEE DWGS	22DAL
E	-	-	-	-	-	-	-	-	-	-
AA	-	30x12	1000	0.05	-	-	30	SEE DWGS	¾", 45°	630
BB	-	12x12	400	0.05	-	-	30	SEE DWGS	1/2", 45°	630
CC	-	16x16	600	0.05	-	-	30	SEE DWGS	1/2", 45°	630
DD	-	22x22	1200	0.05	-	-	30	SEE DWGS	1/2", 45°	630

PRV PERFORMANCE SCHEDULE

TAG	SIZE(IN)	FLOW(GPM)	P.D.(PSIG)	SETTING (PSIG)		WATTS MODEL
PRV-1	3	175.0	15	75		LF223-B-HP
-	-	-	-	-		-
-	-	-	-	-		-

SPLIT-SYSTEM AIR CONDITIONER PERFORMANCE SCHEDULE

* - AT ARI CONDITIONS OF 85°F AMBIENT/65°F INDOOR WB

TAG	TOTAL COOLING (MBH)*	AIRFLOW (CFM)	MOISTURE REMOVAL (PINTS/HR)	COND. DRAIN (IN)	EER (BTUH/WATT)	SOUND RATING (DB)	WEIGHT (LBS)	REFRIGERANT PIPE SIZE (IN)		ELECTRICAL REQUIREMENTS			BASIS OF DESIGN Daikin		
								LIQUID	GAS	MCA	MAX FUSE	V/PH/HZ	SERVICE	ARRANGEMENT	MODEL
SAC1	11.9	290	2.1	1"	13.8	40	62	⅜	⅝	1.0	15.0	208/1/60	EMR #1	WALL	FTXN12KEVJU
SAC2	11.9	290	2.1	1"	13.8	40	62	⅜	⅝	1.0	15.0	208/1/60	EMR #2	WALL	FTXN12KEVJU

SPLIT-SYSTEM CONDENSING UNIT PERFORMANCE SCHEDULE

* - AT ARI CONDITIONS OF 95°F AMBIENT / 67°F INDOOR WB
* - AT 45°F, SATURATED SUCTION TEMPERATURE

TAG	TOTAL COOLING (MBH)*	REFRIGERANT	EER	MINIMUM AMBIENT TEMP.(°F)	FOOTPRINT DIMENSION (INCHES)	OPERATING WEIGHT (LBS)	ELECTRICAL REQUIREMENTS			BASIS OF DESIGN Daikin			
							MCA	MOP	V/PH/HZ	-	SOUND (BEL)	SERVICE	MODEL
* SCU-1	11.9	R-410A	13.1	0°	37"x13	163	13.0	15.0	208/1/60	-	-	SAC-1	RXN12KEVJU
* SCU-2	11.9	R-410A	13.1	0°	37"x13	163	13.0	15.0	208/1/60	-	-	SAC-2	RXN12KEVJU

* PROVIDE w/ LOW AMBIENT CONTROLS.

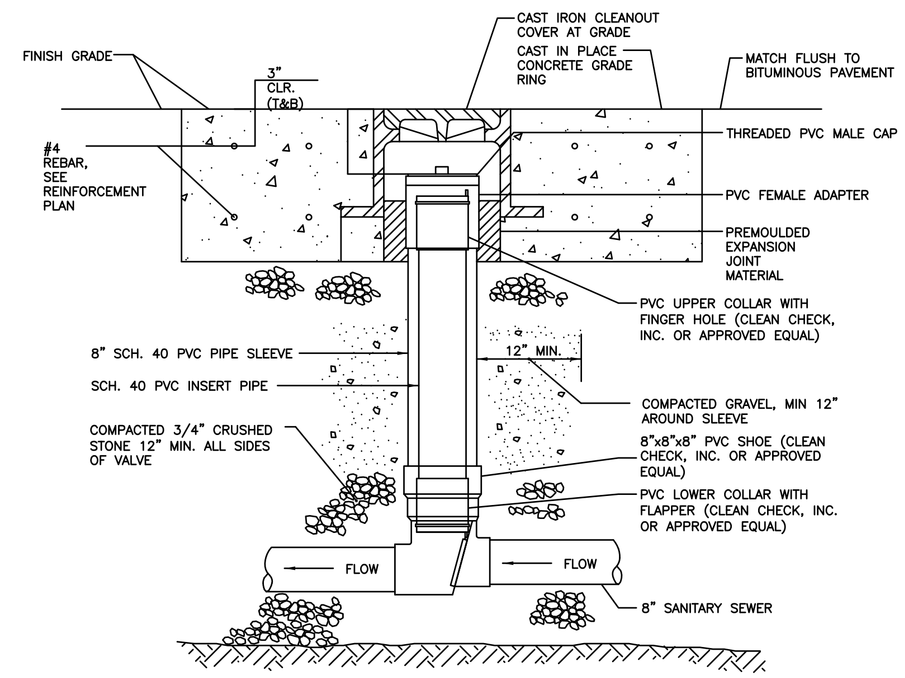

NOTE: MATERIALS AND INSTALLATION PER MANUFACTURER'S INSTRUCTIONS

BACK WATER VALVE DETAIL

N.T.S.

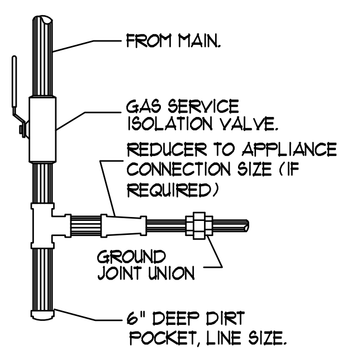

DOWNFEED GAS PIPING CONNECTION DETAIL

NTS

NOTE APPLIANCES WITH REGULATORS LOCATE PIPING SHOWN HEREIN UPSTREAM OF THE APPLIANCE REGULATOR. PROVIDE A TEST PLUG DOWNSTREAM OF THE APPLIANCE REGULATOR.

MAX UL CLASSIFIED SIZE
FSD60 OB, 60-110B, 370B, 360B, 350B, 340B

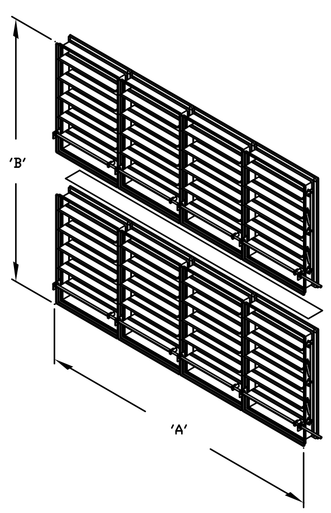

*A = 126" (3200) FOR FSD360B
*A = 120" (3048) FOR FSD340B, 350B, 370B, 60 OB, 60-110B

B* = 122" (3099) FOR FSD360B
B* = 98" (2489) FOR FSD60OB, 60-110B
B*= 96" (2438) FOR FSD340B, 350B, 370B

14 GAGE (2) X DAMPER 'A' DIMENSION X 5" (127) WIDE REINFORCING PLATE

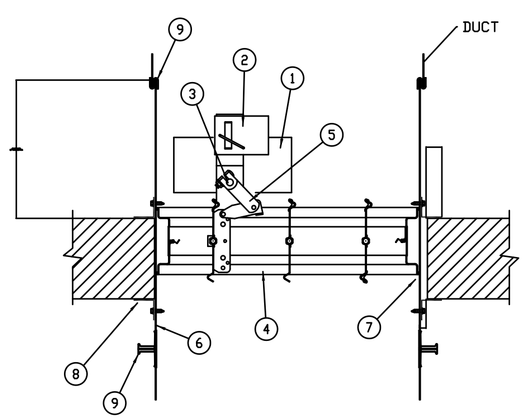

ACTUATOR ABOVE DAMPER

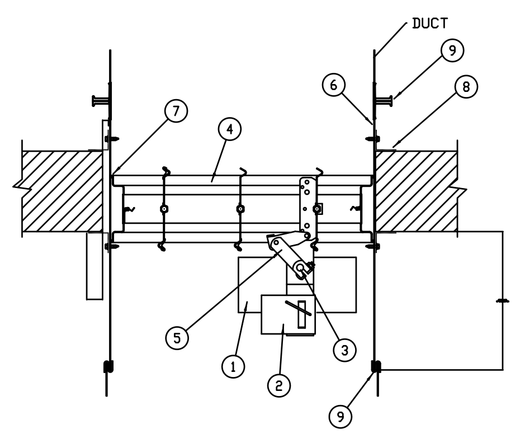

ACTUATOR BELOW DAMPER

FSD60 OUT OF WALL INSTALLATION

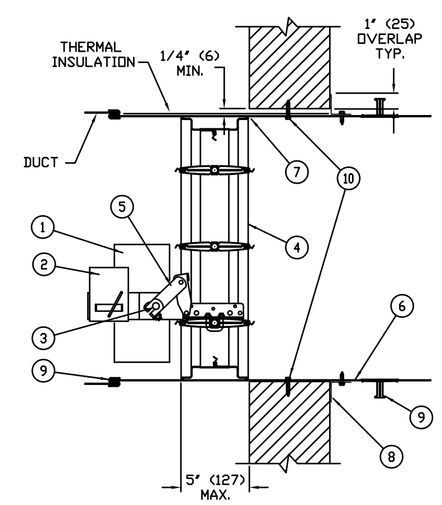

ITEM.	DESCRIPTION
1.	ACTUATOR w/ END SWITCH (LOCATION MAY VARY). RUSKIN'S UL LISTED FIRE DAMPER ACTUATORS MAY BE FIELD INSTALLED IF PROPERLY LABELED. SEE ACTUATOR INSTALLATION INSTRUCTIONS FOR FIELD MOUNTING OF DAMPER ACTUATORS.
2.	OPTIONAL FIRESTAT OR SP100
3.	AUXILIARY OPERATING JACK SHAFT
4.	DAMPER
5.	OVER CENTER LOCK
6.	SLEEVE
7.	CAULKING MATERIAL (MAY BE ON EITHER SIDE OF DAMPER FRAME
8.	PFMA OR CONVENTIONAL MOUNTING ANGLES
9.	S-JOINT/DUCT MATE, SLEEVE TO DUCT
10.	RUSKIN MODEL NUMBERS LISTED. APPROVED EQUAL PRODUCTS FROM GREENHECK ARE ACCEPTABLE.

COMBINATION FD / SD INSTALLATION DETAIL

NTS

Atlantic Comfort Systems, Inc.
Mechanical Contractor • 207-284-6360
392 Hill Street Biddeford, ME 04005
www.atlanticcomfort.com

Revisions
11/20/2012-UNDERSLAB PIPING FOR CONSTRUCTION.
12/14/2012- FOR PERMIT.
1 1/4/2013- PLUMBING REVISIONS.
2 2/6/2013- 100% For Review and Comment

Bay House

Portland, ME

BENNETT ENGINEERING
MECHANICAL • ELECTRICAL
(207) 865-9475

Job No.: 3346
Date: 12/14/12
Scale: 1/8" = 1'-0" or A.N.
Drawn by: SP Doel
Checked by: SP Doel

Drawing Title:
Mechanical Details

MP.1