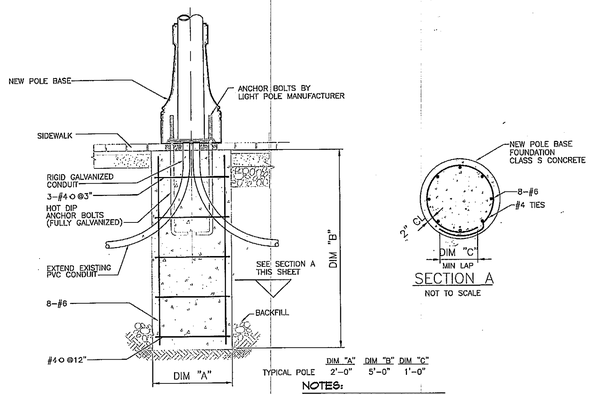

NOTES:
1. CONCRETE f'c=4000 psi.
2. REINF. STEEL GRADE 60 NEW BARS.
3. CONCRETE ¾" AGG.; 6 ± 1% ENTRAINED AIR.
4. PROVIDE 2 COATS BITUMINOUS DAMPROOFING FOR ALL CONCRETE BELOW GRADE.
5. POLE BASE PER THE 'BAYSIDE DISTRICT MEDIUM SCALED LIGHTING POLE' AND CITY SPECIFICATIONS. COORDINATE WITH PORTLAND PUBLIC SERVICES.
6. BID ALT. - CONTRACTOR MAY SUBSTITUTE PRECAST CONCRETE LIGHT POLE BASE EQUALTO ABOVE SPEC. AND APPROVED BY CITY.

TYPICAL LIGHT POLE BASE
NOT TO SCALE

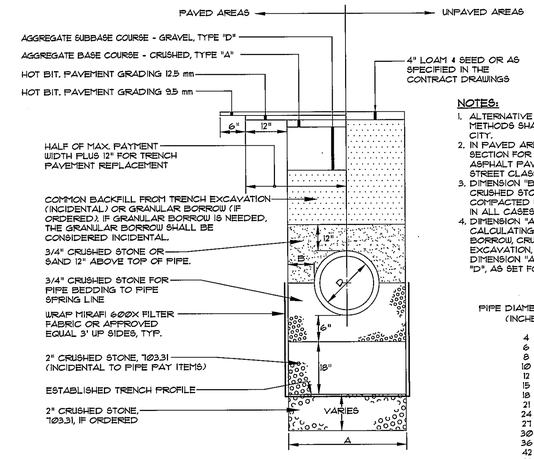

NOTES:
1. ALTERNATIVE CONSTRUCTION METHODS OR PAYMENT METHODS SHALL BE APPROVED IN ADVANCE BY THE CITY.
2. IN PAVED AREAS REFER TO BITUMINOUS PAVEMENT SECTION FOR DEPTHS OF GRAVEL AND HOT MIX ASPHALT PAVEMENT BASED ON THE CORRESPONDING STREET CLASSIFICATION.
3. DIMENSION "B" SHALL BE SUFFICIENT TO ALLOW CRUSHED STONE BEDDING TO BE PLACED AND COMPACTED UNDER THE HAUNCHES OF THE PIPE& BUT IN ALL CASES "B" SHALL BE AT LEAST 9".
4. DIMENSION "A" IS THE MAXIMUM WIDTH ALLOWED FOR CALCULATING PAY QUANTITIES UNDER GRANULAR BORROW, CRUSHED STONE, STRUCTURAL EARTH EXCAVATION, AND STRUCTURAL ROCK EXCAVATION. DIMENSION "A" SHALL BE BASED ON PIPE DIAMETER "D", AS SET FORTH IN THE FOLLOWING TABLE.

PIPE DIAMETER, "D" (INCHES)	MAX. TRENCH WIDTH, "A" (FEET)
4	4.0
6	4.0
8	4.0
10	4.0
12	4.0
15	4.0
18	5.0
21	5.0
24	5.5
27	6.0
30	6.0
36	7.0
42	8.0
48	8.0

TYPICAL PIPE INSTALLATION DETAIL
NOT TO SCALE

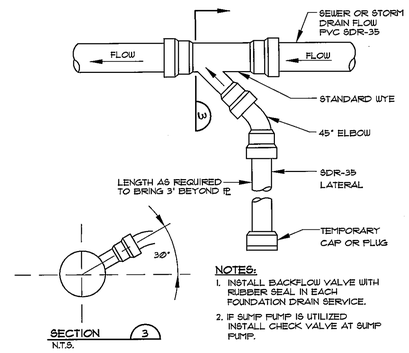

NOTES:
1. INSTALL BACKFLOW VALVE WITH RUBBER SEAL IN EACH FOUNDATION DRAIN SERVICE.
2. IF SUMP PUMP IS UTILIZED INSTALL CHECK VALVE AT SUMP PUMP.

SEWER / FOUNDATION DRAIN SERVICE CONNECTION
NOT TO SCALE

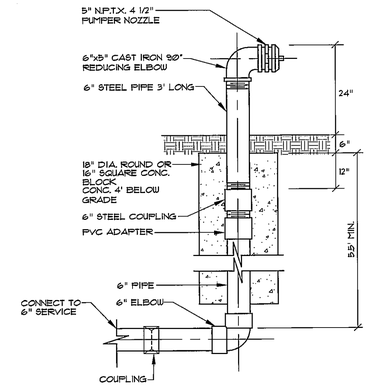

FIRE PROTECTION STAND PIPE
NOT TO SCALE

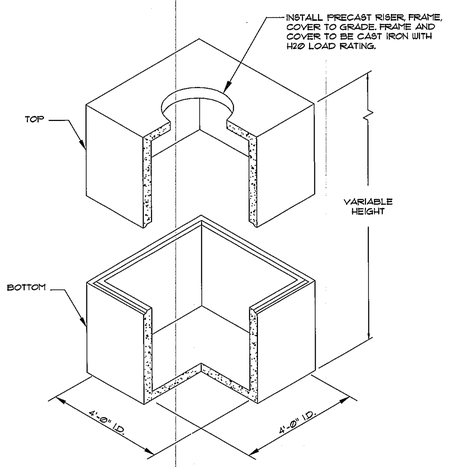

UTILITY MANHOLE
NOT TO SCALE

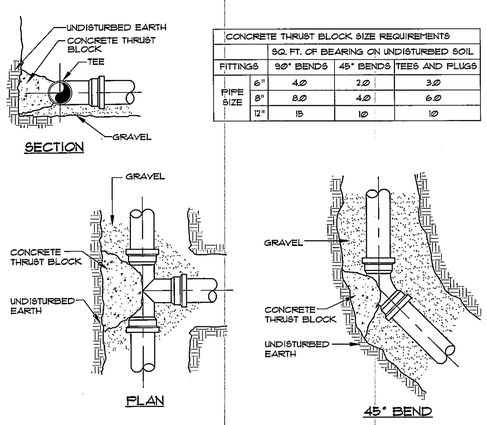

CONCRETE THRUST BLOCK SIZE REQUIREMENTS				
		SQ. FT. OF BEARING ON UNDISTURBED SOIL		
FITTINGS		90° BENDS	45° BENDS	TEES AND PLUGS
PIPE SIZE	6"	4.0	2.0	3.0
	8"	8.0	4.0	6.0
	12"	15	10	10

TEE AND BEND DETAIL
NOT TO SCALE

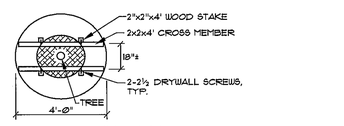

ALT. TREE STAKING PLAN
NOT TO SCALE

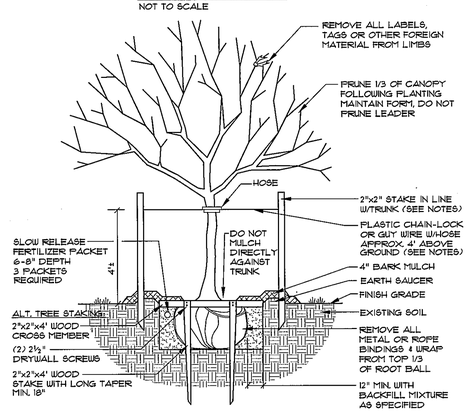

NOTES:
INSTALL STAKES AND GUYS TO TREES IF THE FOLLOWING APPLY:
1. THE TREE IS OF SUBSTANTIAL SIZE.
2. THE PLANTING LOCATION IS EXTREMELY WINDY, AS ON OPEN UNDEVELOPED SITES.
3. THE PLANTING LOCATION IS COMPRISED OF SAND OR OTHER LOOSE TEXTURED SOILS.
4. IF STAKES AND GUYS ARE REQUIRED, REMOVE AFTER ONE YEAR TIME.

DECIDUOUS TREES 2" TO 4" CALIPER
NOT TO SCALE

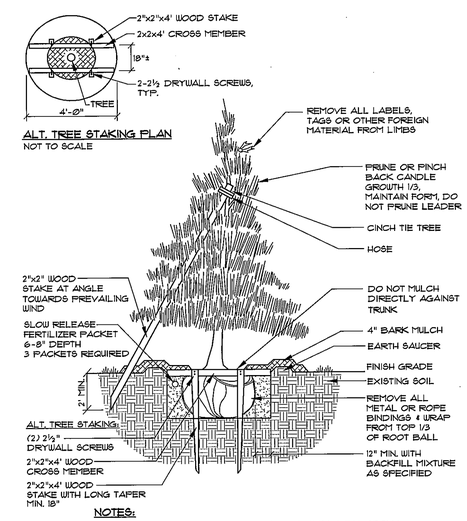

NOTES:
INSTALL STAKES AND GUYS TO TREES IF THE FOLLOWING APPLY:
1. THE TREE IS OF SUBSTANTIAL SIZE.
2. THE PLANTING LOCATION IS EXTREMELY WINDY, AS ON OPEN UNDEVELOPED SITES.
3. THE PLANTING LOCATION IS COMPRISED OF SAND OR OTHER LOOSE TEXTURED SOILS.
4. IF STAKES AND GUYS ARE REQUIRED, REMOVE AFTER ONE YEAR TIME.

DECIDUOUS TREES UNDER 2" CALIPER OR UNDER 8' IN HEIGHT
EVERGREEN TREES 7'-0" IN HEIGHT & UNDER
NOT TO SCALE

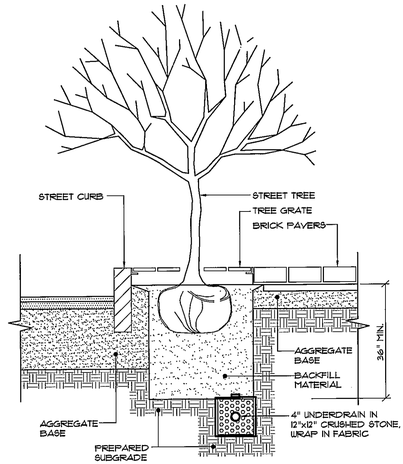

TREE PIT DETAIL
NOT TO SCALE

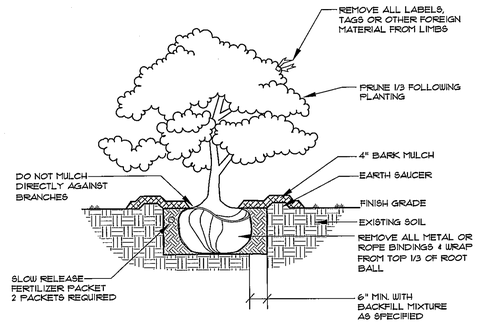

DECIDUOUS & EVERGREEN SHRUB
NOT TO SCALE

REV:	BY:	DATE:	STATUS:
C	WTC	09-17-13	CITY SUBMITTAL 4
B	WTC	09-03-13	CITY SUBMITTAL 3
A	WTC	07-29-13	SUBMIT SITE PLAN APPLICATION TO CITY

THIS PLAN SHALL NOT BE MODIFIED WITHOUT WRITTEN PERMISSION FROM SEBAGO TECHNICS, INC. ANY ALTERATIONS, AUTHORIZED OR OTHERWISE, SHALL BE AT THE USER'S SOLE RISK AND WITHOUT LIABILITY TO SEBAGO TECHNICS, INC.

SEBAGO TECHNICS
WWW.SEBAGOTECHNICS.COM
75 John Roberts Rd. - Suite 1A, South Portland, ME 04106 Tel: 207-799-3125
250 Goddard Rd. - Suite B, Lewiston, ME 04240 Tel: 207-782-5585

PROJECT NO.	FIELD BOOK	DESIGN	CHKD	DRAWN
13251	-	WTC	WTC	MAL

DETAILS
OF:
SEAPORT LOFTS
NEWBURY / HANCOCK STREET
PORTLAND, MAINE
FOR:
113 NEWBURY STREET, LLC
35 FAY STREET, SUITE 107B
BOSTON, MA 02118-4320

DATE	SCALE
07-26-13	AS SHOWN

13251D.dwg, TAB:D4

SHEET 13 OF 14