Marge Schmuckal - Re: Fwd: HVAC Condition :Seaport Lofts

From: Helen Donaldson
To: Marge Schmuckal
Date: 11/6/2014 10:45 AM
Subject: Re: Fwd: HVAC Condition :Seaport Lofts

20-D-13-14-15

Sure. It's 101-121 Newbury Street (it may also be listed under 48 Hancock Street?)

B-2b

Thanks, Marge.

>>> Marge Schmuckal 11/6/2014 9:53 AM >>>
can you remind me of the address?

>>> Helen Donaldson 11/6/2014 9:09 AM >>>
Marge,

Attached are the HVAC specs for the Seaport Lofts at 113 Newbury Street. The review of these was a condition of approval of ours way back. Can you take a look? Or should I be passing this along to Ann?

Nell

7:00 Am – 9:00 pm – 60 dBAs
9:00 pm 7:00 Am 55 dBA's

Marge Schmuckal - Re: HVAC Condition :Seaport Lofts

From: Marge Schmuckal
To: Helen Donaldson; Will Conway
Date: 11/7/2014 9:56 AM
Subject: Re: HVAC Condition :Seaport Lofts
CC: Ali Malone; Joe Dasco; Mark Mueller; Matt Provencal; Matthew Gagnon

---

looks ok - my site plan comments expected this info at time of HVAC permit submission, not at site plan sign off. I will put it in the files for when we get the HVAC permits.
Marge

>>> Will Conway <wconway@sebagotechnics.com> 11/5/2014 5:28 PM >>>
Hi Nell, part of the puzzle attached,

Will

Sent from my iPhone

Begin forwarded message:

> **From:** "Matt Provencal" <matt@muellerarchitects.com>
> **To:** "Will Conway" <wconway@sebagotechnics.com>
> **Cc:** "Matthew Gagnon" <mgagnon@landryfrenchconstruction.com>, "Rick Cormier (rcormier@landryfrenchconstruction.com)" <rcormier@landryfrenchconstruction.com>, "Ali Malone (ali.malone@gmail.com)" <ali.malone@gmail.com>, "Joe Dasco (joedasco@comcast.net)" <joedasco@comcast.net>
> **Subject: FW: Seaport Lofts**
>
> Will,
>
> Please find attached the HVAC information for the planning board condition.
>
> Could you please forward to Nell Donaldson.
>
> Thank you,
>
> Matt Provencal, Assoc. AIA
> Architectural Designer
> [cid:FGLKWLUVLSDN.IMAGE.jpeg]
> Mark Mueller Architects
> 100 Commercial Street
> Suite 205
> Portland, Maine 04101
> matt@muellerarchitects.com<mailto:matt@muellerarchitects.com>
> Tele: 207.774.9057
> Direct Line: 207.773.3851

From: Will [mailto:Will@bennettengineering.net]
Sent: Wednesday, November 05, 2014 2:35 PM
To: Matt Provencal
Cc: Kevin Purnell (Kevin@granite-corp.com)
Subject: FW: Seaport Lofts

From: Margie
Sent: Wednesday, November 05, 2014 2:29 PM
To: mark@muellerarchitects.com<mailto:mark@muellerarchitects.com>
Cc: Will
Subject: Seaport Lofts

Mark, attached is a description of the mechanical systems at Seaport Lofts. Please contact Will Bennett will@bennettengineering.net<mailto:will@bennettengineering.net> if you have any questions.

Margaret McManus, Office Manager
Bennett Engineering, Inc.
865-9475

BENNETT
ENGINEERING
MECHANICAL • ELECTRICAL
(207) 865-9475

20-D-13-14-15

B-2b

Memorandum

To: Mark Mueller

Date: 11/5/14

From: Will Bennett

Subject: **HVAC system on Seaport Lofts**

The mechanical systems at the Seaport Lofts are proposed to be the following:

The 37 units will be heated and cooled by Daikin wall mounted or ducted indoor units connected to multi system condensing units. The Typical condensing unit will serve two to 4 indoor units. Each unit will be served by one to two condensing units. 16 units will have two condensing units. Condensing units will be mounted on the roof and piped with insulated refrigerant lines to their respective indoor fan coils. All piping will be within the walls of the structure and run thru the roof to the condensing units. There will be a total of 53 condensing units for the units. Each condensing unit will receive power supply from its respective unit. Power consumption for each system will be 18 amps or less. Condensing units are relatively quiet with a with a dB(A) of 54 or less.

The systems will be high efficiency with SEERS as high as 17.2 and HSPF as high as 9.3. Each indoor unit will be controlled individually. Smaller areas such as bathrooms may be fitted with electric floor (radiant mat) heating as they will not have fancoils.

The common and hallways will be heated and cooled with a high efficiency Rooftop single package system. Heating fuel source will be natural gas. The unit will be equipped with economizer/outside air dampers to provide proper ventilation and space temperature.

See attached cut sheets for system components. Feel free to contact us if you have any questions.

Small Sunline

Single Package R-410A Air Conditioner

Project Name: **seaport** | Unit Model #: **ZF036D10P2JAA2**

Quantity: **1** | System: **ZF036D10P2JAA2**

Cooling Performance		
Total capacity	37.5	MBH
Sensible capacity	27.1	MBH
Refrigerant type	R-410A	
Seasonal Efficiency (at ARI)	13.00	SEER
Efficiency (at ARI)	11.00	EER
Ambient DB temp.	95.0	°F
Entering DB temp.	80.0	°F
Entering WB temp.	67.0	°F
Leaving DB temp.	59.1	°F
Leaving WB temp.	57.1	°F
Power input (w/o blower)	2.79	kW
Sound power	81	dB(A)

Gas Heating Performance		
Entering DB temp.	60	°F
Heating output capacity (Max)	92	MBH
Supply air	1200	CFM
Heating input capacity (Max)	115	MBH
Leaving DB temp.	131.0	°F
Air temp. rise	71.0	°F
SSE	80.2	%
Stages	2	

Supply Air Blower Performance		
Supply air	1200	CFM
Ext. static pressure	0.6	IWG
Unit static resistance	0.08	IWG
Blower speed	918	RPM
Max BHP of Motor (including service factor)	1.73	HP
Duct location	Bottom	
Motor rating	1.50	HP
Actual required BHP	0.61	HP
Power input	0.57	kW
Elevation	0	ft.
Drive type	BELT	

Electrical Data		
Power supply	230-3-60	
Unit min circuit ampacity	18.9	Amps
Unit max over-current protection	25	Amps

Dimensions & Weight					
Hgt	33 in.	Len	83 in.	Wth	45 in.
Weight with factory installed options					598 lbs.

Clearances					
Right	24 in.	Front	32 in.	Back	36 in.
Top	72 in.	Bottom	0 in.	Left	36 in.

Note: Please refer to the tech guide for listed maximum static pressures

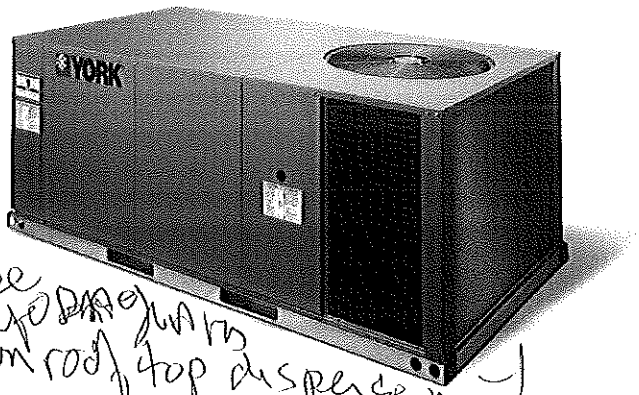

See info on roof top dispense mat

3 Ton

- York Units are Manufactured at an ISO 9001 Registered Facility and Each Rooftop is Completely Computer-Run Tested Prior to Shipment.

Unit Features

- Unit Cabinet Constructed of Powder Painted Steel, Certified At 1000 Hours Salt Spray Test (ASTM B-117 Standards)
- Through-the-Curb and Through-The-Base Utility Connections
- Either Supply and/or Return can be Field Converted from Vertical to Horizontal Configuration without Cutting Panels.
- Full Perimeter Base Rails with Built In Rigging Capabilities
- Galvanized Steel Drain Pan
- Reciprocating Compressor
- Single Stage Cooling
- Solid Core Liquid Line Filter Driers
- Microchannel Condenser Coil
- 92 MBH Output Aluminized Steel, Two Stage Gas Nominal Heat
- 1.5 HP Standard Static Belt Drive Blower
- Unit Ships with 1" Throwaway Filters with a Standard Filter Rack That Will Accept up to 2" Filters
- Single Point Power Connection
- HACR Circuit Breaker/Disconnect (Sized for 208 Volts)
- Non Powered Convenience Outlet (110 VAC)
- Supply Air Smoke Detector
- Single Enthalpy Economizer and Hood (No Barometric Relief Damper)
- Short Circuit Current: 5kA RMS Symmetrical

Standard Unit Controller: Simplicity Control Board

- An Integrated Low-Ambient Control, Anti-Short Cycle Protection, Lead-Lag, Fan On and Fan off Delays, Low Voltage Protection, On-Board Diagnostic and Fault Code Display.
- Safety Monitoring - Monitors the High and Low-Pressure Switches, the Freezestats, the Gas Valve, if Applicable, and the Temperature Limit Switch on Gas and Electric Heat Units. The Unit Control Board will Alarm on Ignition Failures, Safety Lockouts and Repeated Limit Switch Trips.

Warranty

- One (1) Year Limited Warranty on the Complete Unit
- Five (5) Year Warranty - Compressors and Electric Heater Elements
- Ten (10) Year Warranty - Aluminized Steel Tubular Heat Exchangers

Small Sunline

Single Package R-410A Air Conditioner

Project Name: **seaport** | Unit Model #: **ZF036D10P2JAA2**

Quantity: **1** | System: **ZF036D10P2JAA2**

Factory Installed Options

ZF036D10P2JAA2

Product Category:	**Z**	York Sunline Single Packaged R-410A Air Conditioner
Product Identifier:	**F**	13.0 SEER / 11.0 EER
Nominal Cooling Capacity:	**036**	3 Ton Single Stage Cooling
Heat Type and Nominal Heat Capacity:	**D10**	92 MBH Output Aluminized Steel, Two Stage Gas Heat
Airflow:	**P**	1.5 HP Standard Static Belt Drive Blower 1" Throwaway Filters Single Enthalpy Economizer and Hood (No Barometric Relief Damper)
Voltage:	**2**	208/230-3-60
Installation Options:	**J**	Supply Air Smoke Detector Non Powered Convenience Outlet (110 VAC) HACR Circuit Breaker/Disconnect (Sized for 208 Volts)
Additional Options:	**AA**	Microchannel Condenser Coil Galvanized Steel Drain Pan
Product Generation:	**2**	

Small Sunline

Single Package R-410A Air Conditioner

Project Name: **seaport** | Unit Model #: **ZF036D10P2JAA2**

Quantity: **1** | System: **ZF036D10P2JAA2**

Cooling Performance		
Total capacity	37.5	MBH
Sensible capacity	27.1	MBH
Refrigerant type	R-410A	
Seasonal Efficiency (at ARI)	13.00	SEER
Efficiency (at ARI)	11.00	EER
Ambient DB temp.	95.0	°F
Entering DB temp.	80.0	°F
Entering WB temp.	67.0	°F
Leaving DB temp.	59.1	°F
Leaving WB temp.	57.1	°F
Power input (w/o blower)	2.79	kW
Sound power	81	dB(A)

Gas Heating Performance		
Entering DB temp.	60	°F
Heating output capacity (Max)	92	MBH
Supply air	1200	CFM
Heating input capacity (Max)	115	MBH
Leaving DB temp.	131.0	°F
Air temp. rise	71.0	°F
SSE	80.2	%
Stages	2	

Supply Air Blower Performance		
Supply air	1200	CFM
Ext. static pressure	0.6	IWG
Unit static resistance	0.08	IWG
Blower speed	918	RPM
Max BHP of Motor (including service factor)	1.73	HP
Duct location	Bottom	
Motor rating	1.50	HP
Actual required BHP	0.61	HP
Power input	0.57	kW
Elevation	0	ft.
Drive type	BELT	

Electrical Data		
Power supply	230-3-60	
Unit min circuit ampacity	18.9	Amps
Unit max over-current protection	25	Amps

Dimensions & Weight					
Hgt	33 in.	Len	83 in.	Wth	45 in.
Weight with factory installed options					598 lbs.

Clearances					
Right	24 in.	Front	32 in.	Back	36 in.
Top	72 in.	Bottom	0 in.	Left	36 in.

Note: Please refer to the tech guide for listed maximum static pressures

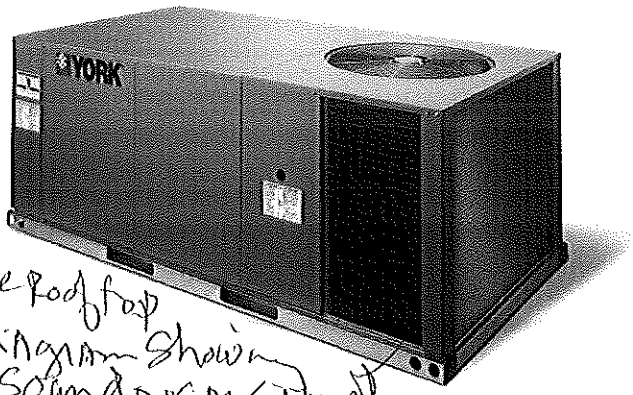

See Rooftop Diagram Showing Sound Dispersement

3 Ton

- York Units are Manufactured at an ISO 9001 Registered Facility and Each Rooftop is Completely Computer-Run Tested Prior to Shipment.

Unit Features

- Unit Cabinet Constructed of Powder Painted Steel, Certified At 1000 Hours Salt Spray Test (ASTM B-117 Standards)
- Through-the-Curb and Through-The-Base Utility Connections
- Either Supply and/or Return can be Field Converted from Vertical to Horizontal Configuration without Cutting Panels.
- Full Perimeter Base Rails with Built in Rigging Capabilities
- Galvanized Steel Drain Pan
- Reciprocating Compressor
- Single Stage Cooling
- Solid Core Liquid Line Filter Driers
- Microchannel Condenser Coil
- 92 MBH Output Aluminized Steel, Two Stage Gas Nominal Heat
- 1.5 HP Standard Static Belt Drive Blower
- Unit Ships with 1" Throwaway Filters with a Standard Filter Rack That Will Accept up to 2" Filters
- Single Point Power Connection
- HACR Circuit Breaker/Disconnect (Sized for 208 Volts)
- Non Powered Convenience Outlet (110 VAC)
- Supply Air Smoke Detector
- Single Enthalpy Economizer and Hood (No Barometric Relief Damper)
- Short Circuit Current: 5kA RMS Symmetrical

Standard Unit Controller: Simplicity Control Board

- An Integrated Low-Ambient Control, Anti-Short Cycle Protection, Lead-Lag, Fan On and Fan off Delays, Low Voltage Protection, On-Board Diagnostic and Fault Code Display.
- Safety Monitoring - Monitors the High and Low-Pressure Switches, the Freezestats, the Gas Valve, if Applicable, and the Temperature Limit Switch on Gas and Electric Heat Units. The Unit Control Board will Alarm on Ignition Failures, Safety Lockouts and Repeated Limit Switch Trips.

Warranty

- One (1) Year Limited Warranty on the Complete Unit
- Five (5) Year Warranty - Compressors and Electric Heater Elements
- Ten (10) Year Warranty - Aluminized Steel Tubular Heat Exchangers

Small Sunline

Single Package R-410A Air Conditioner

Project Name: **seaport**

Quantity: **1**

Unit Model #: **ZF036D10P2JAA2**

System: **ZF036D10P2JAA2**

Consolidated Drawing

NOTES:
1. FOR OUTDOOR USE ONLY.
2. WEIGHTS SHOWN ARE FOR COOLING ONLY UNITS.
3. MIN. CLEARANCES TO BE:
   - RIGHT SIDE: 24 [609,6]
   - LEFT SIDE: 24 [609,6] (LESS ECONOMIZER)
     36 [914,4] (WITH ECONOMIZER)
   - FRONT: 24 [609,6] (COOLING/ELECTRIC HEAT)
     32 [812,8] (GAS HEAT)
   - REAR: 12 [304,8] (LESS ECONOMIZER)
     36 [914,4] (WITH ECONOMIZER OR FIXED AIR/MOTORIZED DAMPER)
   - TOP: 72 [1828,8]
   - BOTTOM: 0 [0]
4. FOR SMALLER SERVICE AND OPERATIONAL CLEARANCES CONTACT YOUR APPLICATION ENGINEERING DEPARTMENT.
5. DOWNFLOW DUCTS DESIGNED TO BE ATTACHED TO ACCESSORY ROOF CURB ONLY. IF UNIT IS MOUNTED SIDE SUPPLY, IT IS RECOMMENDED THAT THE DUCTS ARE SUPPORTED BY CROSS BRACES, AS DONE ON ACCESSORY ROOF CURBS.
6. SIDE DUCT FLANGES ARE 0.875" [22,2] HIGH. BOTTOM DUCTS DO NOT HAVE FLANGES.
7. MINIMUM CONDENSATION TRAP HEIGHT SHALL BE 1.5 TIMES THE LOWEST NEGATIVE STATIC.
8. DIMENSIONS IN [ ] ARE IN MILLIMETERS OR KILOGRAMS.
9. OPTIONAL COIL GUARD, GAS HEAT, ECONOMIZER HOOD, DISCONNECT SWITCH, CONVENIENCE OUTLET, AND OUTLET/INLET HOOD SHOWN.

10 EXCEPT XP (HEAT PUMP) UNITS.

→ DIRECTION OF AIRFLOW

⊕ CENTER OF GRAVITY

TONNAGE	UNIT	OPERATING WEIGHT (LBS) (BASE UNIT)	CENTER OF GRAVITY LOCATION (BASE UNIT)		4 POINT CORNER LOADS (LBS) (BASE UNIT)			
			X	Y	A	B	C	D
3	ZF	468 [212]	33 [838,2]	18.25 [463,6]	114 [52]	76 [35]	111 [50]	167 [76]
4	ZF	541 [245]	31.50 [800,1]	18.50 [469,9]	138 [63]	85 [39]	122 [55]	196 [89]
5	ZF	569 [258]	37 [939,8]	15 [381]	105 [48]	86 [39]	170 [77]	208 [94]
6	ZF	640 [290]	37 [939,8]	15 [381]	118 [54]	96 [44]	192 [87]	234 [106]
3	ZR	575 [261]	40 [1016]	20 [508]	132 [60]	125 [57]	155 [70]	164 [74]
4	ZR	585 [265]	40 [1016]	20 [508]	134 [61]	127 [58]	158 [72]	167 [76]
5	ZR	590 [268]	40 [1016]	20 [508]	135 [61]	128 [58]	159 [72]	168 [76]
3	XP	575 [261]	39 [990,6]	20 [508]	135 [61]	121 [55]	151 [69]	168 [76]
4	XP	585 [265]	39 [990,6]	20 [508]	137 [62]	124 [56]	154 [70]	171 [78]
5	XP	590 [268]	39 [990,6]	20 [508]	138 [63]	125 [57]	155 [70]	172 [78]

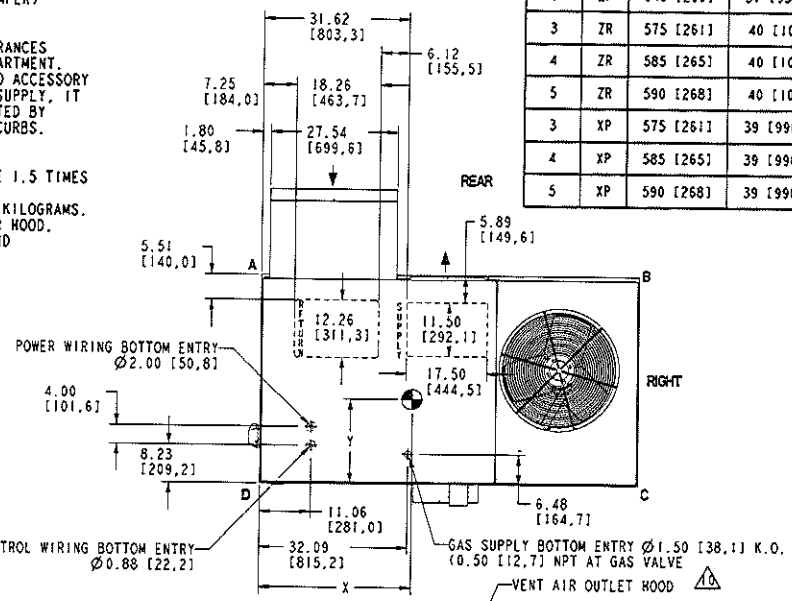

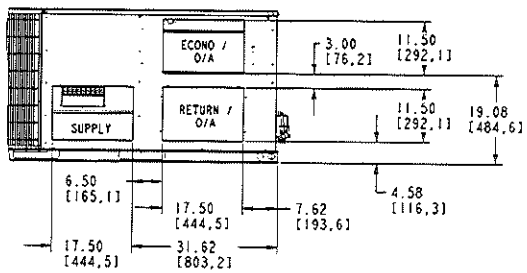

REAR (PARTIAL VIEW)
(RAIN HOOD NOT SHOWN IN THIS VIEW)

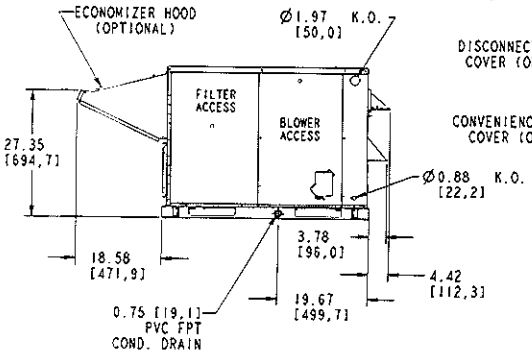

LEFT VIEW

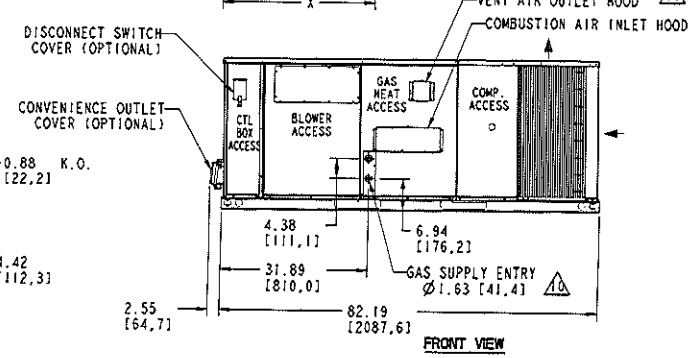

FRONT VIEW

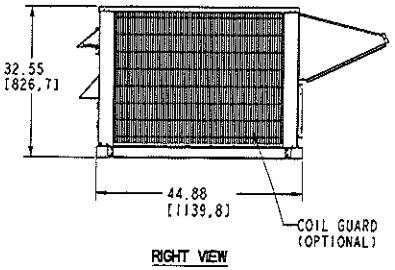

RIGHT VIEW

Small Sunline

Single Package R-410A Air Conditioner

Project Name: **seaport**

Unit Model #: **ZF036D10P2JAA2**

Quantity: **1**

System: **ZF036D10P2JAA2**

1RC0434 Roof Curb

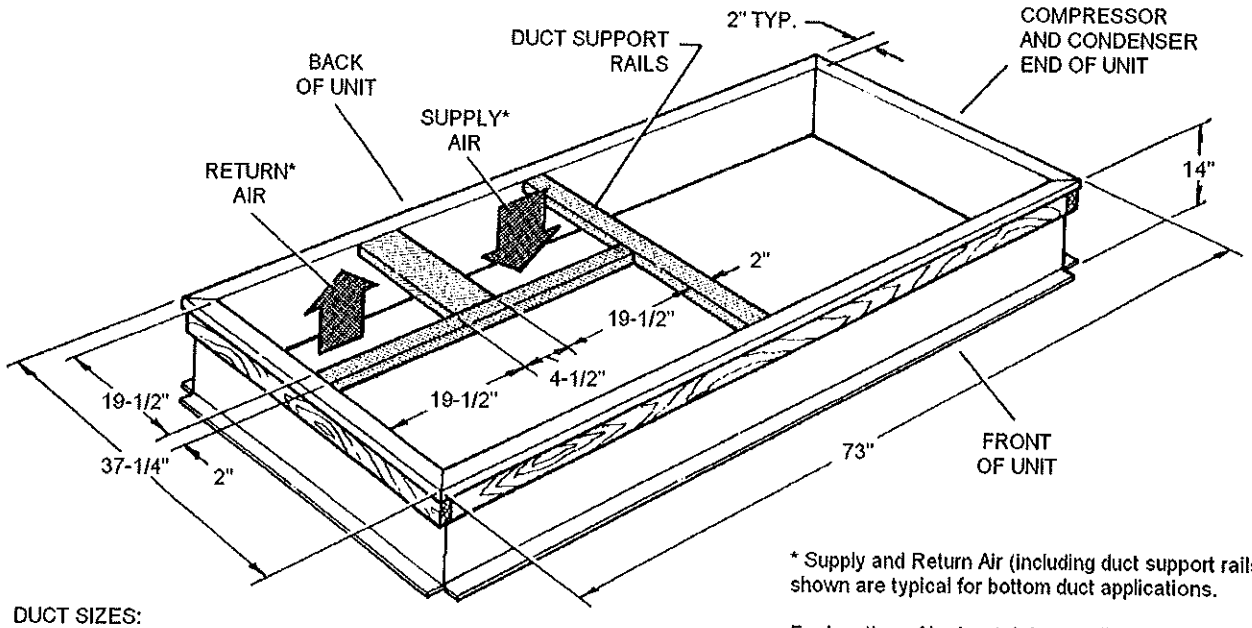

* Supply and Return Air (including duct support rails) shown are typical for bottom duct applications.

For location of horizontal duct applications (on back of unit), refer to Unit Dimensions details.

DUCT SIZES:
Supply Air = 19" x 19"
Return Air = 19" x 19"

1RC0434 Roof Curb Dimensions

Submittal Data Sheet

Project Name:	SEAPPORT MINI SPLIT		
Location:		Approval:	
Engineer:	DAVID CHADWICK	Date:	10/7/2014
Submitted to:	GRANITE	Construction:	
Submitted by:		Unit #:	
Reference:	seaport	Drawing #:	

Performance

Indoor Unit Model No:		Indoor Unit Type:	
Outdoor Unit Model No:	2MXS18GVJU	Condensing Unit Type:	2 Zone Multi Heat Pump
Rated Cooling Capacity (Btu/hr):	18000	*Rated Cooling Conditions*	Indoor: 80°F DB/67°F WB Outdoor: 95°F DB/75°F WB
Sensible Capacity (Btu/hr):	N/A		
Max/Min Cooling Capacity (Btu/hr / kW):	ıtabook/databook		
Cooling Input Power (kW):		*Rated Heating Conditions*	Indoor: 70°F DB/60°F WB Outdoor: 47°F DB/43°F WB
SEER:	19.5/13		
Rated Heating Capacity (Btu/hr):	22000		
Max/Min Heating Capacity (Btu/hr / kW):	.tabook/databook	*Rated Piping Length(ft)*	25
Heating Input Power (kW):		*Rated Height Separation(ft)*	0
Heating COP (Btu/hr / Btu/hr):	3.4/2.9		
HSPF:	9.2/7.7		

Indoor Unit Details

Power Supply (V/Hz/Ph:)		*Airflow Rate (CFM wet coil)*	N/A
Power Supply Connections:		*Moisture Removal (pt/h):*	
Min Circuit Amps MCA (A):		*Gas Pipe Connection (inch):*	
Max Overcurrent Amps MFA (A):		*Liquid Pipe Connection (inch):*	
Dimensions (HxWxD):	N/A	*Condensate Connection (inch):*	
Panel (HxWxD):	N/A	*Sound Pressure Level (dBA):*	
Net Weight (lbs):		*Sound Power Level (dBA):*	
Weight with Panel (lbs):		*Static Pressure Rated/Max (inWg)*	/

Condensing Unit Details

Power Supply (V/Hz/Ph):	208-230/60/1ph	*Compressor Type:*	Inverter
Power Supply Connections:	L1, L2, Ground	*Capacity Control Range (%):*	
Min. Circuit Amps MCA (A):	11.1	*Airflow Rate (CFM):*	1730
Max. Overcurrent Amps MFA (A):	20	*Gas Pipe Connection (inch):*	3/8 x2
Max. Starting Current MSC(A):	8.3	*Liquid Pipe Connection (inch):*	1/4 x2
Rated Load Amps RLA (A):	7.7	*Sound Pressure Level (dBA):*	51
Dimensions (HxWxD):	28-15/16x32-1/2x11-13/16	*Sound Power Level (dBA):*	
Net Weight (lbs):	139		

System Details

Refrigerant Type:	R-410A	*Max. Pipe Length (Vertical ft):*	49.2 ft
Holding Refrigerant Charge (lbs):	5.73	*Cooling Operation Range (°F):*	14 - 115
Additional Charge (oz/ft):	0.22	*Cooling Range w/Baffle (°F):*	14 - 115
Pre-charge Piping (Length ft):	98.4 ft	*Heating Operation Range (°F):*	5 - 72
Max. Pipe Length (Total ft):	164/82 ft	*Heating Range w/Baffle (°F):*	5 - 72

(Daikin's products are subject to continuous improvements. Daikin reserves the right to modify product design, specifications and information in this data sheet without notice and without incurring any obligations)

Submittal Data Sheet

Project Name:	SEAPPORT MINI SPLIT		
Location:		Approval:	
Engineer:	DAVID CHADWICK	Date:	10/7/2014
Submitted to:	GRANITE	Construction:	
Submitted by:		Unit #:	
Reference:	seaport	Drawing #:	

Performance

Indoor Unit Model No:		Indoor Unit Type:	
Outdoor Unit Model No:	3MXS24JVJU	Condensing Unit Type:	3 Zone Multi Heat Pump
Rated Cooling Capacity (Btu/hr):	24000	*Rated Cooling Conditions*	Indoor: 80°F DB/67°F WB Outdoor: 95°F DB/75°F WB
Sensible Capacity (Btu/hr):	N/A		
Max/Min Cooling Capacity (Btu/hr / kW):	tabook/databook		
Cooling Input Power (kW):		*Rated Heating Conditions*	Indoor: 70°F DB/60°F WB Outdoor: 47°F DB/43°F WB
SEER:	16.6/13		
Rated Heating Capacity (Btu/hr):	30000		
Max/Min Heating Capacity (Btu/hr / kW):	tabook/databook	*Rated Piping Length(ft)*	25
Heating Input Power (kW):		*Rated Height Separation(ft)*	0
Heating COP (Btu/hr / Btu/hr):	3.2/2.7		
HSPF:	9.0/7.7		

Indoor Unit Details

Power Supply (V/Hz/Ph:)		*Airflow Rate (CFM wet coil)*	N/A
Power Supply Connections:		*Moisture Removal (pt/h):*	
Min Circuit Amps MCA (A):		*Gas Pipe Connection (inch):*	
Max Overcurrent Amps MFA (A):		*Liquid Pipe Connection (inch):*	
Dimensions (HxWxD):	N/A	*Condensate Connection (inch):*	
Panel (HxWxD):	N/A	*Sound Pressure Level (dBA):*	
Net Weight (lbs):		*Sound Power Level (dBA):*	
Weight with Panel (lbs):		*Static Pressure Rated/Max (inWg)*	/

Condensing Unit Details

Power Supply (V/Hz/Ph):	208-230/60/1ph	*Compressor Type:*	Inverter
Power Supply Connections:	L1, L2, Ground	*Capacity Control Range (%):*	
Min. Circuit Amps MCA (A):	17.8	*Airflow Rate (CFM):*	2062
Max. Overcurrent Amps MFA (A):	20	*Gas Pipe Connection (inch):*	3/8 x 1, 1/2 x 1, 5/8 x 1
Max. Starting Current MSC(A):	12	*Liquid Pipe Connection (inch):*	1/4 x3
Rated Load Amps RLA (A):	10.4	*Sound Pressure Level (dBA):*	54
Dimensions (HxWxD):	30-5/16x35-7/16x12-5/8	*Sound Power Level (dBA):*	
Net Weight (lbs):	168		

System Details

Refrigerant Type:	R-410A	*Max. Pipe Length (Vertical ft):*	49.2 ft
Holding Refrigerant Charge (lbs):	6.83	*Cooling Operation Range (°F):*	14 - 115
Additional Charge (oz/ft):	0.22	*Cooling Range w/Baffle (°F):*	14 - 115
Pre-charge Piping (Length ft):	131.6 ft	*Heating Operation Range (°F):*	5 - 72
Max. Pipe Length (Total ft):	230/82 ft	*Heating Range w/Baffle (°F):*	5 - 72

(Daikin's products are subject to continuous improvements. Daikin reserves the right to modify product design, specifications and information in this data sheet without notice and without incurring any obligations)

Submittal Data Sheet

Project Name:	SEAPPORT MINI SPLIT		
Location:		Approval:	
Engineer:	DAVID CHADWICK	Date:	10/7/2014
Submitted to:	GRANITE	Construction:	
Submitted by:		Unit #:	
Reference:	seaport	Drawing #:	

Performance

Indoor Unit Model No:		Indoor Unit Type:	
Outdoor Unit Model No:	4MXS32GVJU	Condensing Unit Type:	4 Zone Multi Heat Pump
Rated Cooling Capacity (Btu/hr):	30600	*Rated Cooling Conditions*	Indoor: 80°F DB/67°F WB Outdoor: 95°F DB/75°F WB
Sensible Capacity (Btu/hr):	N/A		
Max/Min Cooling Capacity (Btu/hr / kW):	tabook/databook		
Cooling Input Power (kW):		*Rated Heating Conditions*	Indoor: 70°F DB/60°F WB Outdoor: 47°F DB/43°F WB
SEER:	17.2/13.3		
Rated Heating Capacity (Btu/hr):	32000		
Max/Min Heating Capacity (Btu/hr / kW):	tabook/databook	*Rated Piping Length(ft)*	25
Heating Input Power (kW):		*Rated Height Separation(ft)*	0
Heating COP (Btu/hr / Btu/hr):	3.4/3.0		
HSPF:	9.3/7.9		

Indoor Unit Details

Power Supply (V/Hz/Ph:)		*Airflow Rate (CFM wet coil)*	N/A
Power Supply Connections:		*Moisture Removal (pt/h):*	
Min Circuit Amps MCA (A):		*Gas Pipe Connection (inch):*	
Max Overcurrent Amps MFA (A):		*Liquid Pipe Connection (inch):*	
Dimensions (HxWxD):	N/A	*Condensate Connection (inch):*	
Panel (HxWxD):	N/A	*Sound Pressure Level (dBA):*	
Net Weight (lbs):		*Sound Power Level (dBA):*	
Weight with Panel (lbs):		*Static Pressure Rated/Max (inWg)*	/

Condensing Unit Details

Power Supply (V/Hz/Ph):	208-230/60/1ph	*Compressor Type:*	Inverter
Power Supply Connections:	L1, L2, Ground	*Capacity Control Range (%):*	
Min. Circuit Amps MCA (A):	18	*Airflow Rate (CFM):*	2062
Max. Overcurrent Amps MFA (A):	20	*Gas Pipe Connection (inch):*	3/8 x 1, 1/2 x 1, 5/8 x 2
Max. Starting Current MSC(A):	13.8	*Liquid Pipe Connection (inch):*	1/4 x4
Rated Load Amps RLA (A):	12.1	*Sound Pressure Level (dBA):*	54
Dimensions (HxWxD):	30-5/16x35-7/16x12-5/8	*Sound Power Level (dBA):*	
Net Weight (lbs):	168		

System Details

Refrigerant Type:	R-410A	*Max. Pipe Length (Vertical ft):*	49.2 ft
Holding Refrigerant Charge (lbs):	6.83	*Cooling Operation Range (°F):*	14 - 115
Additional Charge (oz/ft):	0.22	*Cooling Range w/Baffle (°F):*	14 - 115
Pre-charge Piping (Length ft):	131.6 ft	*Heating Operation Range (°F):*	5 - 72
Max. Pipe Length (Total ft):	230/82 ft	*Heating Range w/Baffle (°F):*	5 - 72

(Daikin's products are subject to continuous improvements. Daikin reserves the right to modify product design, specifications and information in this data sheet without notice and without incurring any obligations)

Submittal Data Sheet

Project Name:	SEAPPORT MINI SPLIT		
Location:		Approval:	
Engineer:	DAVID CHADWICK	Date:	10/7/2014
Submitted to:	GRANITE	Construction:	
Submitted by:		Unit #:	
Reference:	seaport	Drawing #:	

Performance

Indoor Unit Model No:	CTXS12HVJU	Indoor Unit Type:	Wall Mounted (for Multi)
Outdoor Unit Model No:		Condensing Unit Type:	
Rated Cooling Capacity (Btu/hr):	11500	*Rated Cooling Conditions*	Indoor: 80°F DB/67°F WB Outdoor: 95°F DB/75°F WB
Sensible Capacity (Btu/hr):	N/A		
Max/Min Cooling Capacity (Btu/hr / kW):	tabook/databook		
Cooling Input Power (kW):		*Rated Heating Conditions*	Indoor: 70°F DB/60°F WB Outdoor: 47°F DB/43°F WB
SEER:	data book		
Rated Heating Capacity (Btu/hr):	11500		
Max/Min Heating Capacity (Btu/hr / kW):	tabook/databook	*Rated Piping Length(ft)*	25
Heating Input Power (kW):		*Rated Height Separation(ft)*	0
Heating COP (Btu/hr / Btu/hr):	data book		
HSPF:	data book		

Indoor Unit Details

Power Supply (V/Hz/Ph:)	208-230/60/1ph	*Airflow Rate (CFM wet coil)*	388/335/283
Power Supply Connections:	L1, L2, Ground	*Moisture Removal (pt/h):*	
Min Circuit Amps MCA (A):	data book	*Gas Pipe Connection (inch):*	3/8
Max Overcurrent Amps MFA (A):	data book	*Liquid Pipe Connection (inch):*	1/4
Dimensions (HxWxD):	11-7/16x31-5/16x9-3/8	*Condensate Connection (inch):*	11/16
Panel (HxWxD):	N/A	*Sound Pressure Level (dBA):*	45
Net Weight (lbs):	20	*Sound Power Level (dBA):*	-
Weight with Panel (lbs):		*Static Pressure Rated/Max (inWg)*	0 / 0/0

Condensing Unit Details

Power Supply (V/Hz/Ph):		*Compressor Type:*	Inverter
Power Supply Connections:	L1, L2, Ground	*Capacity Control Range (%):*	
Min. Circuit Amps MCA (A):		*Airflow Rate (CFM):*	N/A
Max. Overcurrent Amps MFA (A):		*Gas Pipe Connection (inch):*	
Max. Starting Current MSC(A):	data book	*Liquid Pipe Connection (inch):*	
Rated Load Amps RLA (A):	data book	*Sound Pressure Level (dBA):*	
Dimensions (HxWxD):	N/A	*Sound Power Level (dBA):*	
Net Weight (lbs):			

System Details

Refrigerant Type:	R-410A	*Max. Pipe Length (Vertical ft):*	data book
Holding Refrigerant Charge (lbs):	-	*Cooling Operation Range (°F):*	14 - 115
Additional Charge (oz/ft):	-	*Cooling Range w/Baffle (°F):*	
Pre-charge Piping (Length ft):	-	*Heating Operation Range (°F):*	5 - 72
Max. Pipe Length (Total ft):	data book	*Heating Range w/Baffle (°F):*	

(Daikin's products are subject to continuous improvements. Daikin reserves the right to modify product design, specifications and information in this data sheet without notice and without incurring any obligations)

Submittal Data Sheet

Project Name:	SEAPPORT MINI SPLIT		
Location:		Approval:	
Engineer:	DAVID CHADWICK	Date:	10/7/2014
Submitted to:	GRANITE	Construction:	
Submitted by:		Unit #:	
Reference:	seaport	Drawing #:	

Performance

Indoor Unit Model No:	CTXS07LVJU	Indoor Unit Type:	Wall Mounted (for Multi)
Outdoor Unit Model No:		Condensing Unit Type:	
Rated Cooling Capacity (Btu/hr):	7000	*Rated Cooling Conditions*	Indoor: 80°F DB/67°F WB Outdoor: 95°F DB/75°F WB
Sensible Capacity (Btu/hr):	N/A		
Max/Min Cooling Capacity (Btu/hr / kW):	databook/databook		
Cooling Input Power (kW):		*Rated Heating Conditions*	Indoor: 70°F DB/60°F WB Outdoor: 47°F DB/43°F WB
SEER:	data book		
Rated Heating Capacity (Btu/hr):	8500	*Rated Piping Length(ft)*	25
Max/Min Heating Capacity (Btu/hr / kW):	databook/databook	*Rated Height Separation(ft)*	0
Heating Input Power (kW):			
Heating COP (Btu/hr / Btu/hr):	data book		
HSPF:	data book		

Indoor Unit Details

Power Supply (V/Hz/Ph:)	208-230/60/1ph	*Airflow Rate (CFM wet coil)*	332/194/145
Power Supply Connections:	L1, L2, Ground	*Moisture Removal (pt/h):*	
Min Circuit Amps MCA (A):	data book	*Gas Pipe Connection (inch):*	3/8
Max Overcurrent Amps MFA (A):	data book	*Liquid Pipe Connection (inch):*	1/4
Dimensions (HxWxD):	11-5/8x31-1/2x8-9/16	*Condensate Connection (inch):*	5/8
Panel (HxWxD):	N/A	*Sound Pressure Level (dBA):*	38
Net Weight (lbs):	20	*Sound Power Level (dBA):*	54
Weight with Panel (lbs):		*Static Pressure Rated/Max (inWg)*	0 / 0/0

Condensing Unit Details

Power Supply (V/Hz/Ph):		*Compressor Type:*	Inverter
Power Supply Connections:	L1, L2, Ground	*Capacity Control Range (%):*	
Min. Circuit Amps MCA (A):	data book	*Airflow Rate (CFM):*	N/A
Max. Overcurrent Amps MFA (A):		*Gas Pipe Connection (inch):*	
Max. Starting Current MSC(A):	data book	*Liquid Pipe Connection (inch):*	
Rated Load Amps RLA (A):	data book	*Sound Pressure Level (dBA):*	
Dimensions (HxWxD):	N/A	*Sound Power Level (dBA):*	
Net Weight (lbs):			

System Details

Refrigerant Type:	R-410A	*Max. Pipe Length (Vertical ft):*	data book
Holding Refrigerant Charge (lbs):	-	*Cooling Operation Range (°F):*	14 - 115
Additional Charge (oz/ft):	-	*Cooling Range w/Baffle (°F):*	14 - 115
Pre-charge Piping (Length ft):	-	*Heating Operation Range (°F):*	5 - 72
Max. Pipe Length (Total ft):	data book	*Heating Range w/Baffle (°F):*	5 - 72

(Daikin's products are subject to continuous improvements. Daikin reserves the right to modify product design, specifications and information in this data sheet without notice and without incurring any obligations)

Submittal Data Sheet

Project Name:	SEAPPORT MINI SPLIT		
Location:		Approval:	
Engineer:	DAVID CHADWICK	Date:	10/7/2014
Submitted to:	GRANITE	Construction:	
Submitted by:		Unit #:	
Reference:	seaport	Drawing #:	

Performance

Indoor Unit Model No:	CTXS09HVJU	Indoor Unit Type:	Wall Mounted (for Multi)
Outdoor Unit Model No:		Condensing Unit Type:	
Rated Cooling Capacity (Btu/hr):	8500	*Rated Cooling Conditions*	Indoor: 80°F DB/67°F WB Outdoor: 95°F DB/75°F WB
Sensible Capacity (Btu/hr):	N/A		
Max/Min Cooling Capacity (Btu/hr / kW):	databook/databook		
Cooling Input Power (kW):			
SEER:	data book	*Rated Heating Conditions*	Indoor: 70°F DB/60°F WB Outdoor: 47°F DB/43°F WB
Rated Heating Capacity (Btu/hr):	10000		
Max/Min Heating Capacity (Btu/hr / kW):	databook/databook	*Rated Piping Length(ft)*	25
Heating Input Power (kW):		*Rated Height Separation(ft)*	0
Heating COP (Btu/hr / Btu/hr):	data book		
HSPF:	data book		

Indoor Unit Details

Power Supply (V/Hz/Ph:)	208-230/60/1ph	*Airflow Rate (CFM wet coil)*	388/335/283
Power Supply Connections:	L1, L2, Ground	*Moisture Removal (pt/h):*	
Min Circuit Amps MCA (A):	data book	*Gas Pipe Connection (inch):*	3/8
Max Overcurrent Amps MFA (A):	data book	*Liquid Pipe Connection (inch):*	1/4
Dimensions (HxWxD):	11-7/16x31-5/16x9-3/8	*Condensate Connection (inch):*	11/16
Panel (HxWxD):	N/A	*Sound Pressure Level (dBA):*	44
Net Weight (lbs):	20	*Sound Power Level (dBA):*	
Weight with Panel (lbs):		*Static Pressure Rated/Max (inWg)*	0 / 0/0

Condensing Unit Details

Power Supply (V/Hz/Ph):		*Compressor Type:*	Inverter
Power Supply Connections:	L1, L2, Ground	*Capacity Control Range (%):*	
Min. Circuit Amps MCA (A):		*Airflow Rate (CFM):*	N/A
Max. Overcurrent Amps MFA (A):		*Gas Pipe Connection (inch):*	
Max. Starting Current MSC(A):	data book	*Liquid Pipe Connection (inch):*	
Rated Load Amps RLA (A):	data book	*Sound Pressure Level (dBA):*	
Dimensions (HxWxD):	N/A	*Sound Power Level (dBA):*	
Net Weight (lbs):			

System Details

Refrigerant Type:	R-410A	*Max. Pipe Length (Vertical ft):*	data book
Holding Refrigerant Charge (lbs):	-	*Cooling Operation Range (°F):*	14 - 115
Additional Charge (oz/ft):	-	*Cooling Range w/Baffle (°F):*	
Pre-charge Piping (Length ft):	-	*Heating Operation Range (°F):*	5 - 72
Max. Pipe Length (Total ft):	data book	*Heating Range w/Baffle (°F):*	

(Daikin's products are subject to continuous improvements. Daikin reserves the right to modify product design, specifications and information in this data sheet without notice and without incurring any obligations)

Submittal Data Sheet

Project Name:	SEAPPORT MINI SPLIT		
Location:		Approval:	
Engineer:	DAVID CHADWICK	Date:	10/7/2014
Submitted to:	GRANITE	Construction:	
Submitted by:		Unit #:	
Reference:	seaport	Drawing #:	

Performance

Indoor Unit Model No:	FTXS15LVJU	Indoor Unit Type:	Wall Mounted
Outdoor Unit Model No:		Condensing Unit Type:	
Rated Cooling Capacity (Btu/hr):	15000	*Rated Cooling Conditions*	Indoor: 80°F DB/67°F WB Outdoor: 95°F DB/75°F WB
Sensible Capacity (Btu/hr):	N/A		
Max/Min Cooling Capacity (Btu/hr / kW):	databook/databook		
Cooling Input Power (kW):		*Rated Heating Conditions*	Indoor: 70°F DB/60°F WB Outdoor: 47°F DB/43°F WB
SEER:	data book		
Rated Heating Capacity (Btu/hr):	18000		
Max/Min Heating Capacity (Btu/hr / kW):	tabook/databook	*Rated Piping Length(ft)*	25
Heating Input Power (kW):		*Rated Height Separation(ft)*	0
Heating COP (Btu/hr / Btu/hr):	data book		
HSPF:	data book		

Indoor Unit Details

Power Supply (V/Hz/Ph:)	208-230/60/1ph	*Airflow Rate (CFM wet coil)*	568/385/360
Power Supply Connections:	L1, L2, Ground	*Moisture Removal (pt/h):*	0.8
Min Circuit Amps MCA (A):	data book	*Gas Pipe Connection (inch):*	1/2
Max Overcurrent Amps MFA (A):	data book	*Liquid Pipe Connection (inch):*	1/4
Dimensions (HxWxD):	13x45-11/16x16-7/8	*Condensate Connection (inch):*	5/8
Panel (HxWxD):	N/A	*Sound Pressure Level (dBA):*	45
Net Weight (lbs):	31	*Sound Power Level (dBA):*	61
Weight with Panel (lbs):		*Static Pressure Rated/Max (inWg)*	0 / 0/0

setback distance should reduce into compl

Condensing Unit Details

Power Supply (V/Hz/Ph):		*Compressor Type:*	Inverter
Power Supply Connections:	L1, L2, Ground	*Capacity Control Range (%):*	
Min. Circuit Amps MCA (A):		*Airflow Rate (CFM):*	N/A
Max. Overcurrent Amps MFA (A):		*Gas Pipe Connection (inch):*	
Max. Starting Current MSC(A):	data book	*Liquid Pipe Connection (inch):*	
Rated Load Amps RLA (A):	data book	*Sound Pressure Level (dBA):*	
Dimensions (HxWxD):	N/A	*Sound Power Level (dBA):*	
Net Weight (lbs):			

System Details

Refrigerant Type:	R-410A	*Max. Pipe Length (Vertical ft):*	data book
Holding Refrigerant Charge (lbs):	-	*Cooling Operation Range (°F):*	14 - 115
Additional Charge (oz/ft):	-	*Cooling Range w/Baffle (°F):*	
Pre-charge Piping (Length ft):	-	*Heating Operation Range (°F):*	5 - 64
Max. Pipe Length (Total ft):	data book	*Heating Range w/Baffle (°F):*	

(Daikin's products are subject to continuous improvements. Daikin reserves the right to modify product design, specifications and information in this data sheet without notice and without incurring any obligations)

4.2 Outdoor Unit

2MXS18GVJU

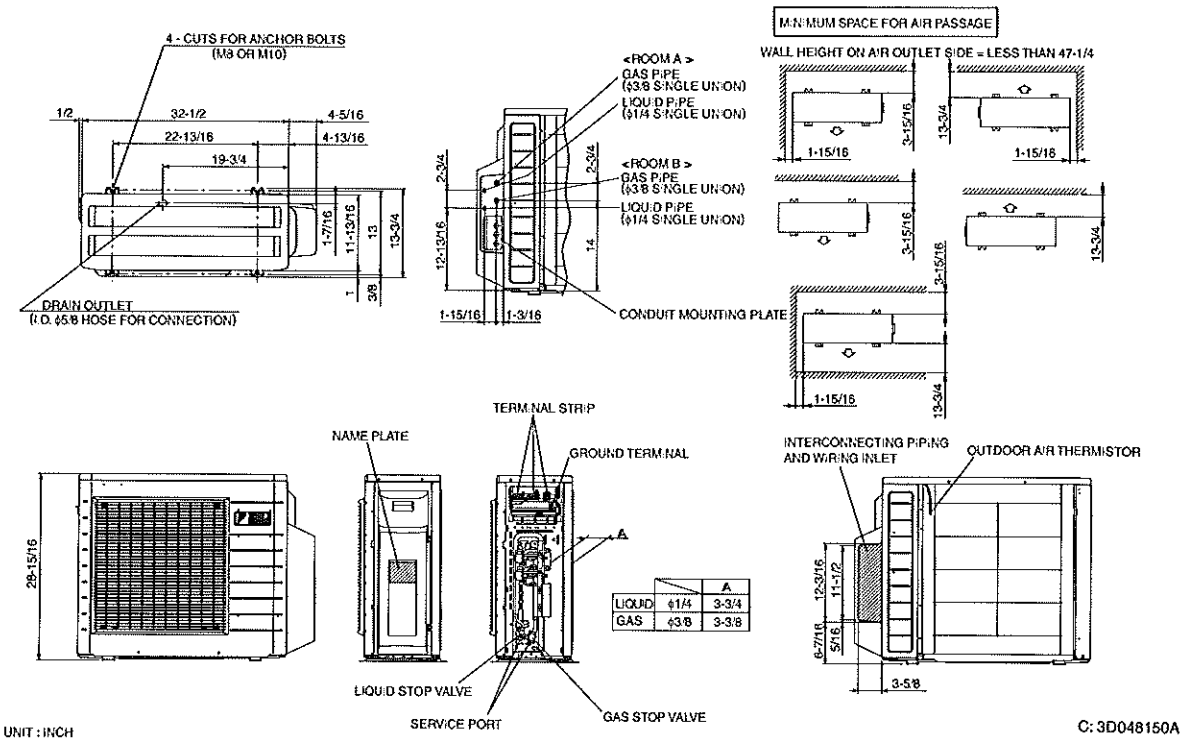

		A
LIQUID	φ1/4	3-3/4
GAS	φ3/8	3-3/8

3MXS24JVJU

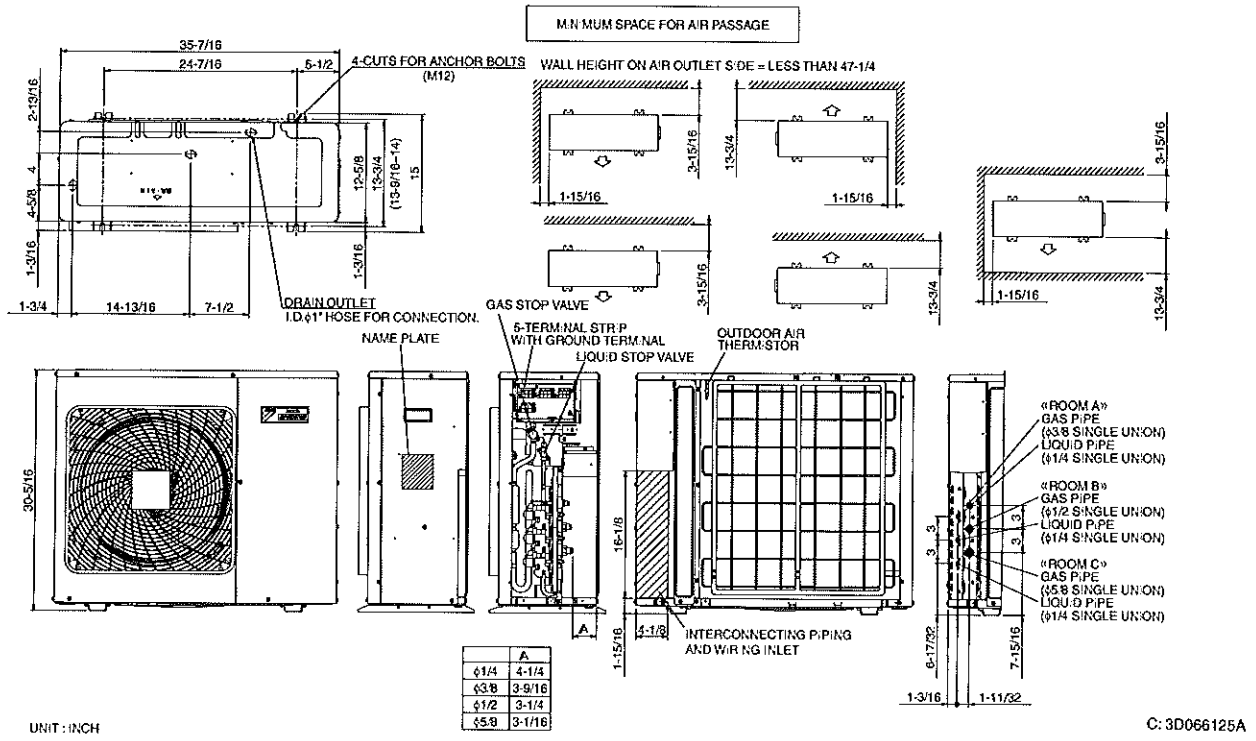

	A
φ1/4	4-1/4
φ3/8	3-9/16
φ1/2	3-1/4
φ5/8	3-1/16

4MXS32GVJU

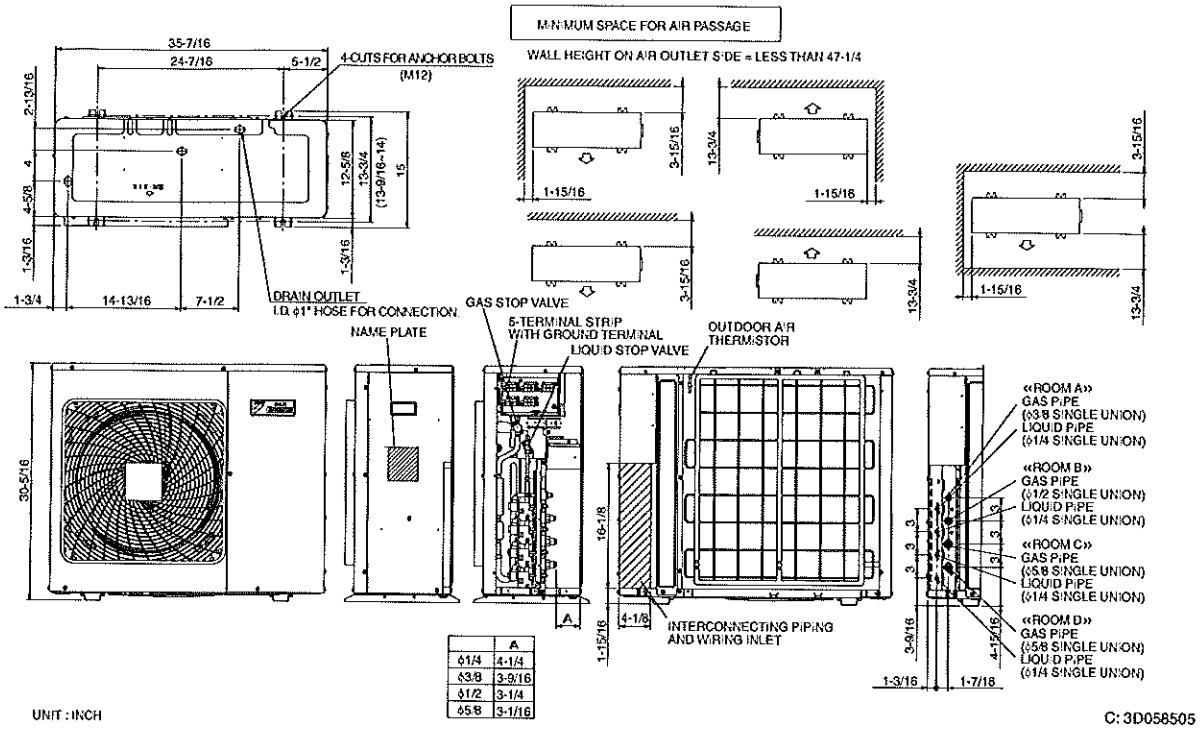

	A
φ1/4	4-1/4
φ3/8	3-9/16
φ1/2	3-1/4
φ5/8	3-1/16

4. Dimensions

4.1 Indoor Unit

CTXS07LVJU

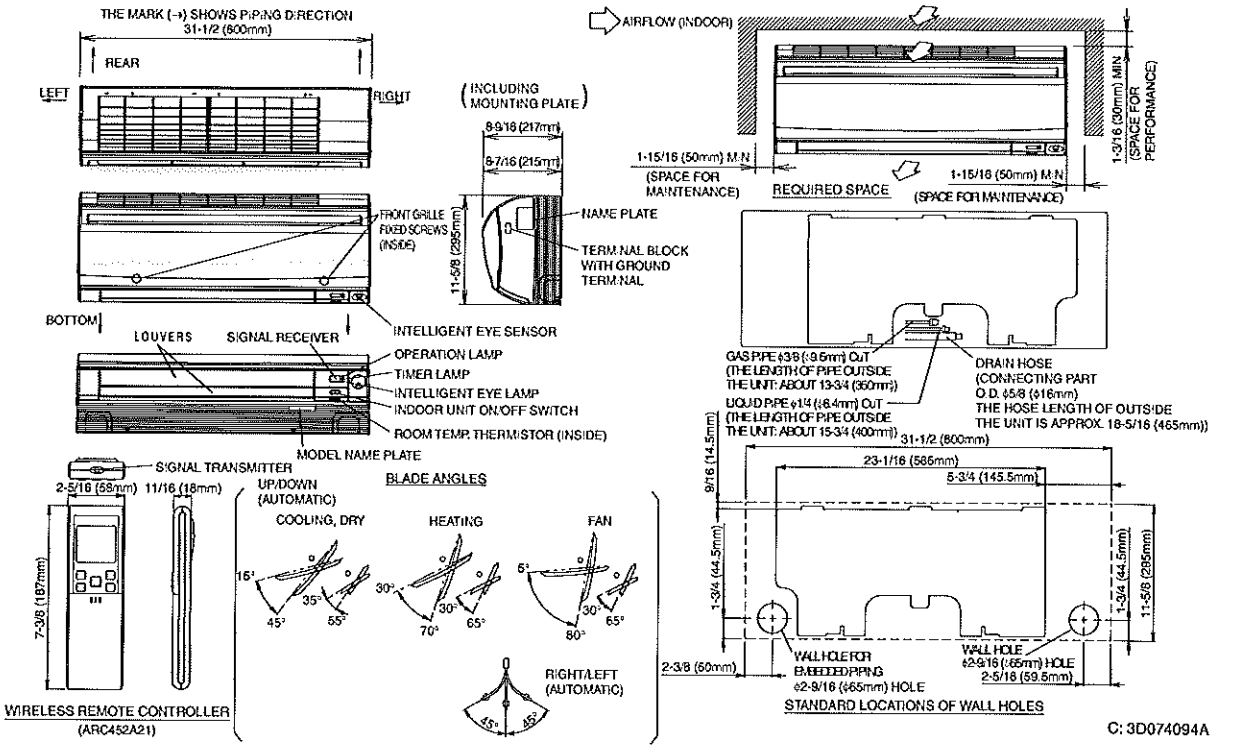

CTXS09/12HVJU

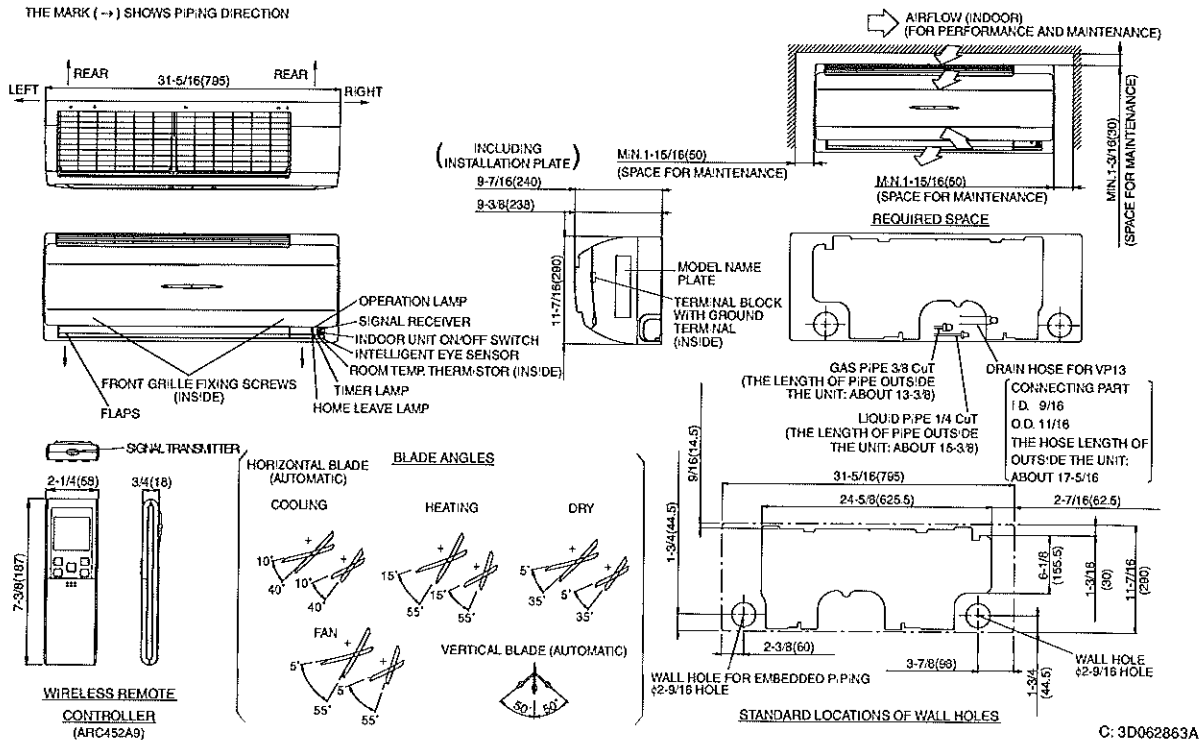

FTXS15/18LVJU

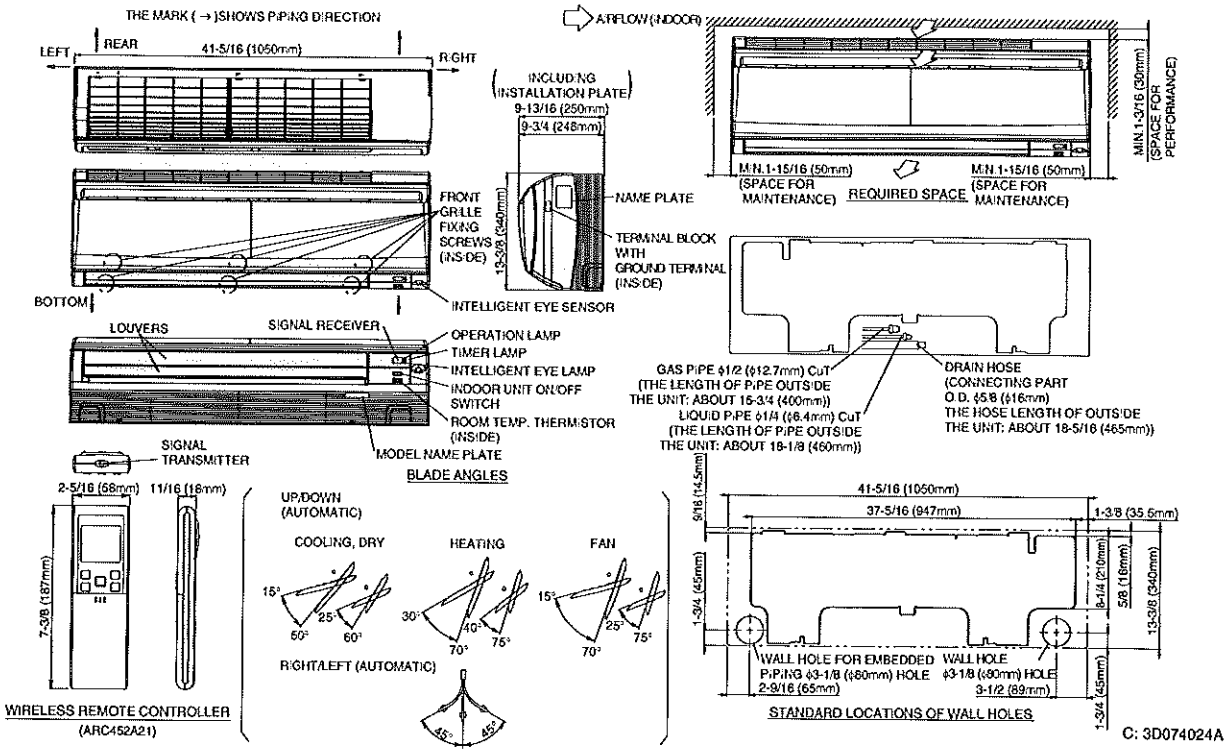

FDXS09/12LVJU

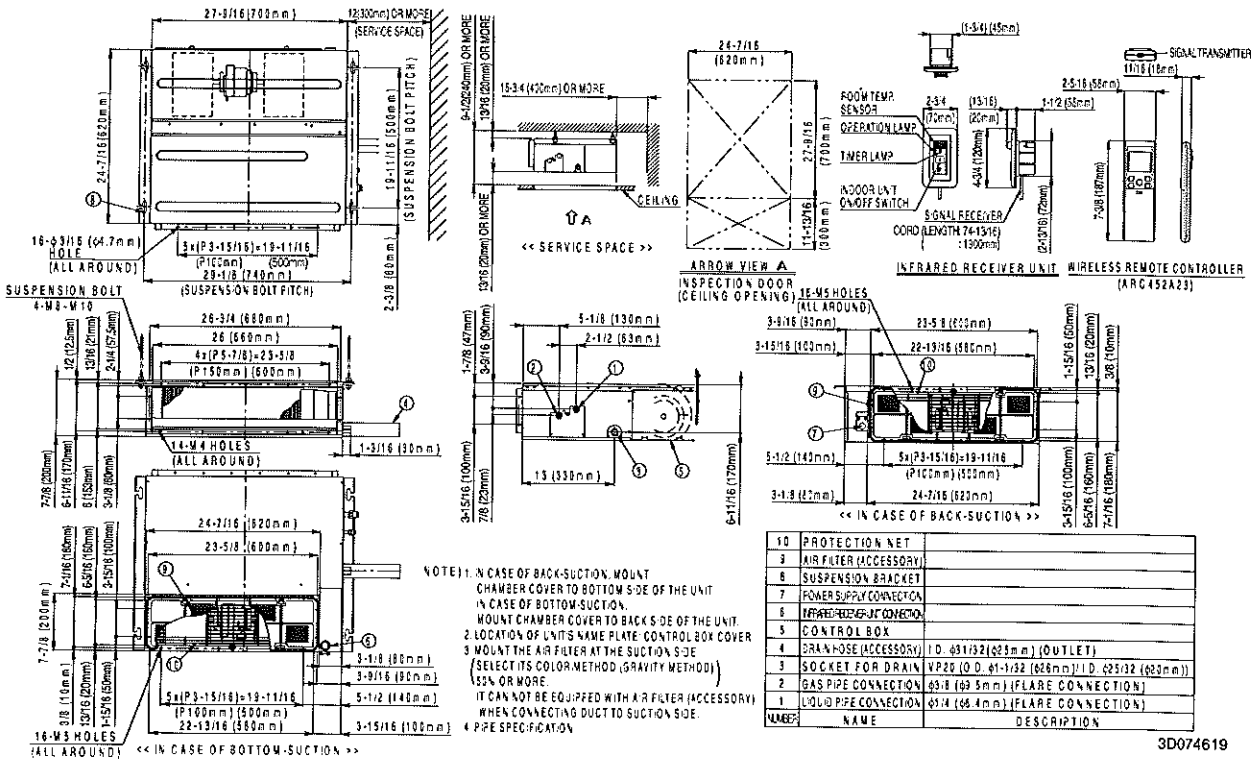

NOTE 1. IN CASE OF BACK-SUCTION, MOUNT CHAMBER COVER TO BOTTOM SIDE OF THE UNIT. IN CASE OF BOTTOM-SUCTION, MOUNT CHAMBER COVER TO BACK SIDE OF THE UNIT.
2. LOCATION OF UNITS NAME PLATE: CONTROL BOX COVER
3. MOUNT THE AIR FILTER AT THE SUCTION SIDE (SELECT ITS COLOR METHOD (GRAVITY METHOD) 55% OR MORE. IT CAN NOT BE EQUIPPED WITH AIR FILTER (ACCESSORY) WHEN CONNECTING DUCT TO SUCTION SIDE.
4. PIPE SPECIFICATION

NUMBER	NAME	DESCRIPTION
10	PROTECTION NET	
9	AIR FILTER (ACCESSORY)	
8	SUSPENSION BRACKET	
7	POWER SUPPLY CONNECTION	
6	INFRARED RECEIVER UNIT CONNECTION	
5	CONTROL BOX	
4	DRAIN HOSE (ACCESSORY)	I.D. φ31/32 (φ25mm) (OUTLET)
3	SOCKET FOR DRAIN	VP20 (O.D. φ1-1/32 (φ26mm)/I.D. φ25/32 (φ20mm))
2	GAS PIPE CONNECTION	φ3/8 (φ9.5mm) (FLARE CONNECTION)
1	LIQUID PIPE CONNECTION	φ1/4 (φ6.4mm) (FLARE CONNECTION)

3D074619

CDXS15/18LVJU

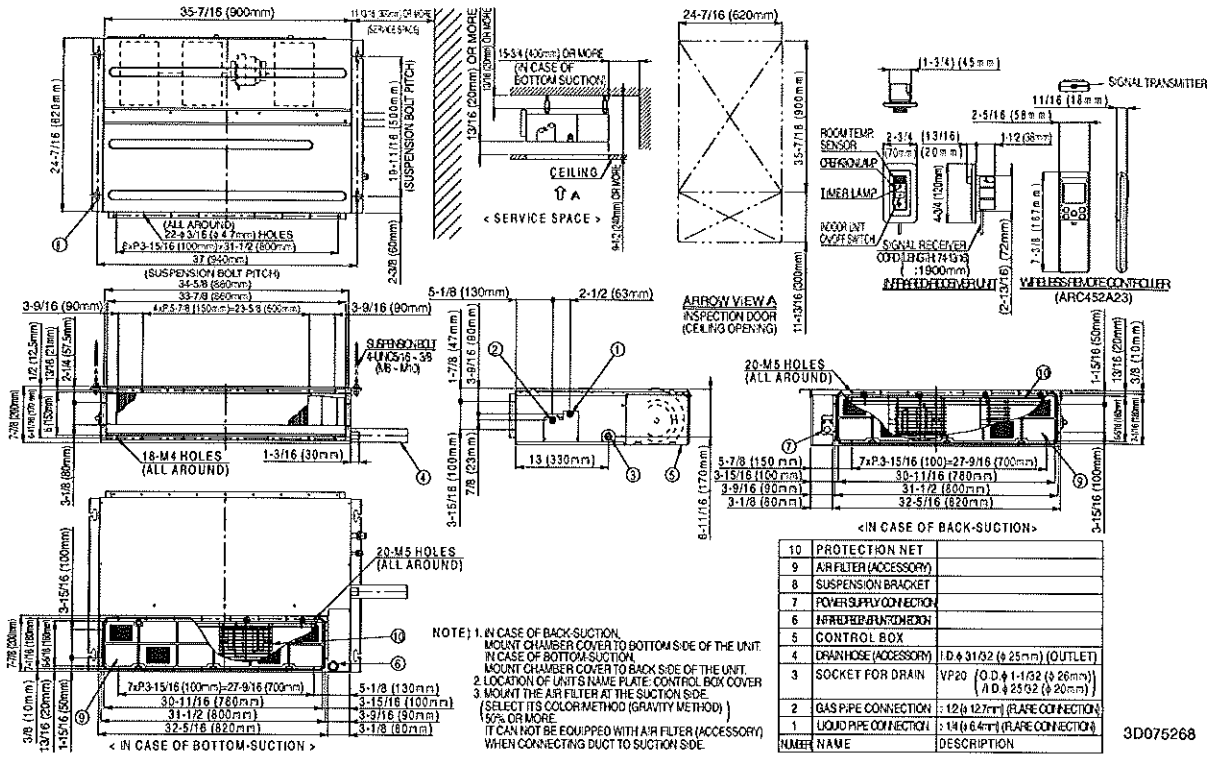

NOTE) 1. IN CASE OF BACK-SUCTION, MOUNT CHAMBER COVER TO BOTTOM SIDE OF THE UNIT. IN CASE OF BOTTOM-SUCTION, MOUNT CHAMBER COVER TO BACK SIDE OF THE UNIT.
2. LOCATION OF UNIT'S NAME PLATE: CONTROL BOX COVER
3. MOUNT THE AIR FILTER AT THE SUCTION SIDE. (SELECT ITS COLOR/METHOD (GRAVITY METHOD) 50% OR MORE. IT CAN NOT BE EQUIPPED WITH AIR FILTER (ACCESSORY) WHEN CONNECTING DUCT TO SUCTION SIDE.

NUMBER	NAME	DESCRIPTION
10	PROTECTION NET	
9	AIR FILTER (ACCESSORY)	
8	SUSPENSION BRACKET	
7	POWER SUPPLY CONNECTION	
6	INFRARED RUN CONNECTION	
5	CONTROL BOX	
4	DRAIN HOSE (ACCESSORY)	I.D. ϕ 31/32 (ϕ 25mm) (OUTLET)
3	SOCKET FOR DRAIN	VP20 (O.D. ϕ 1-1/32 (ϕ 26mm) / I.D. ϕ 25/32 (ϕ 20mm))
2	GAS PIPE CONNECTION	: 1/2 (ϕ 12.7mm) (FLARE CONNECTION)
1	LIQUID PIPE CONNECTION	: 1/4 (ϕ 6.4mm) (FLARE CONNECTION)

3D075268

FFQ09/12LVJU with BYFQ60B8W1U (Decoration Panel)

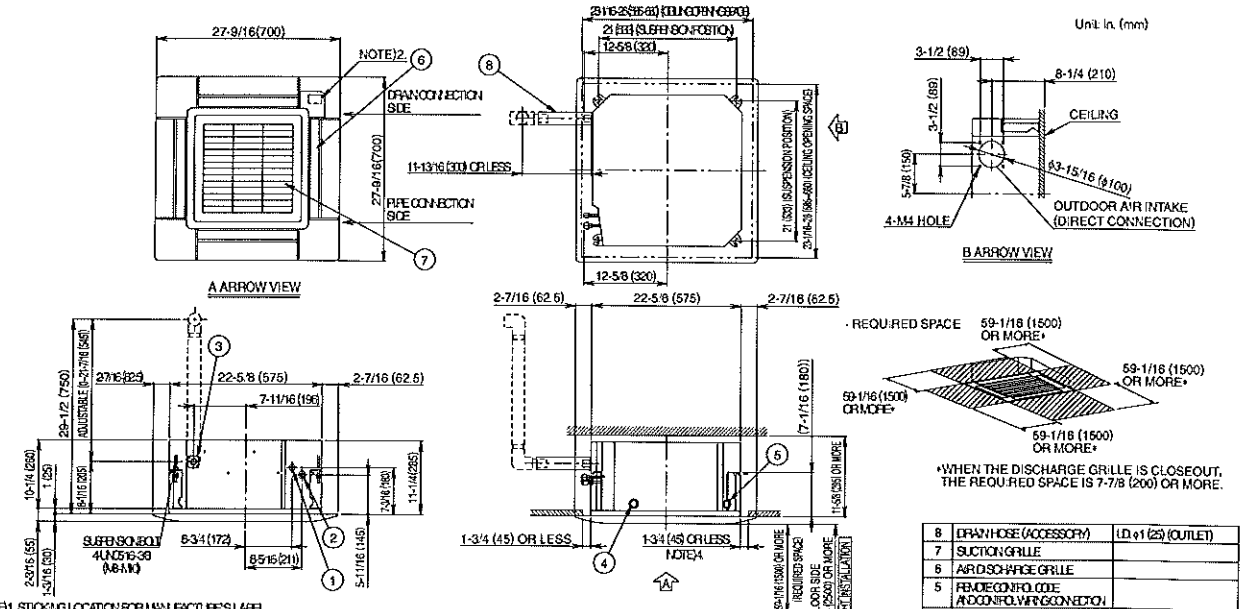

NOTE) 1. STICKING LOCATION FOR MANUFACTURE'S LABEL
MANUFACTURE'S LABEL FOR INDOOR UNIT: ON THE BELL MOUTH INSIDE SUCTION GRILLE
MANUFACTURE'S LABEL FOR DECORATION PANEL: ON THE INNER FRAME INSIDE SUCTION GRILLE
2. IN CASE OF USING WIRELESS REMOTE CONTROLLER, THIS POSITION WILL BE A SIGNAL RECEIVER. REFER TO THE DRAWING OF WIRELESS REMOTE CONTROLLER IN DETAIL.
3. WHEN THE TEMPERATURE AND HUMIDITY IN THE CEILING EXCEED 86°F (30°C) AND RH 80% OR THE FRESH AIR IS INDUCTED INTO THE CEILING OR THE UNIT CONTINUES 24 HOUR OPERATION, AN ADDITIONAL INSULATION (THICKNESS 3/8 (10) OR MORE OF GLASS WOOL OR POLYETHYLENE FOAM) IS REQUIRED.
4. THOUGH THE INSTALLATION IS ACCEPTABLE UP TO MAXIMUM OF 26 (660) SQUARE CEILING OPENING, KEEP THE CLEARANCE OF 1-3/4 (45) OR LESS BETWEEN THE MAIN UNIT AND THE CEILING OPENING SO THAT THE PANEL OVERLAP ALLOWANCE CAN BE ENSURED.

· DECORATION PANEL

BYFQ60B8W1U	WHITE

ITEM	PART NAME	REMARK
8	DRAIN HOSE (ACCESSORY)	I.D. ϕ 1 (25) (OUTLET)
7	SUCTION GRILLE	
6	AIR DISCHARGE GRILLE	
5	REMOTE CONTROL CODE AND CONTROL WIRING CONNECTION	
4	POWER SUPPLY CONNECTION	
3	DRAIN PIPE CONNECTION	VP20 (O.D. ϕ 1-1/32 (26))
2	GAS PIPE CONNECTION	ϕ 3/8 (9.5) (FLARE CONNECTION)
1	LIQUID PIPE CONNECTION	ϕ 1/4 (6.4) (FLARE CONNECTION)

3D080622

FFQ15/18LVJU with BYFQ60B8W1U (Decoration Panel)

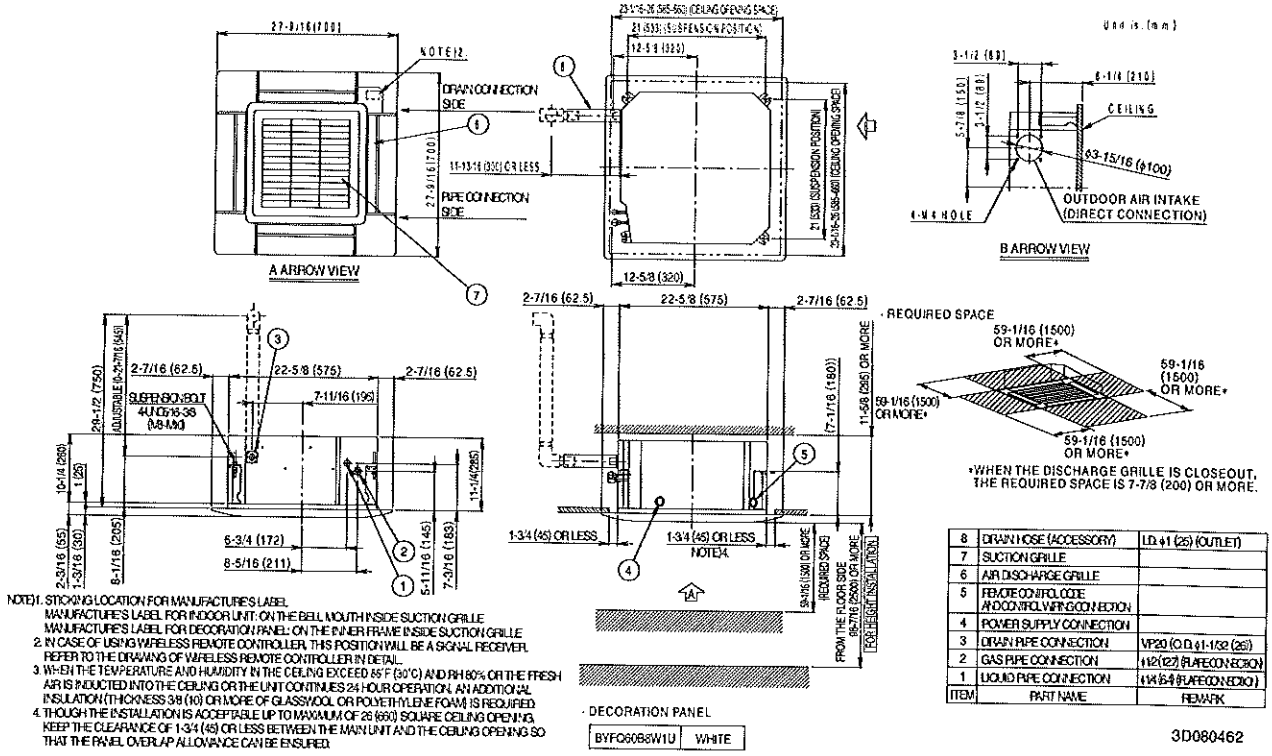

NOTE:
1. STICKING LOCATION FOR MANUFACTURE'S LABEL
   MANUFACTURE'S LABEL FOR INDOOR UNIT: ON THE BELL MOUTH INSIDE SUCTION GRILLE
   MANUFACTURE'S LABEL FOR DECORATION PANEL: ON THE INNER FRAME INSIDE SUCTION GRILLE
2. IN CASE OF USING WIRELESS REMOTE CONTROLLER, THIS POSITION WILL BE A SIGNAL RECEIVER. REFER TO THE DRAWING OF WIRELESS REMOTE CONTROLLER IN DETAIL.
3. WHEN THE TEMPERATURE AND HUMIDITY IN THE CEILING EXCEED 86°F (30°C) AND RH 80% OR THE FRESH AIR IS INDUCTED INTO THE CEILING OR THE UNIT CONTINUES 24 HOUR OPERATION, AN ADDITIONAL INSULATION (THICKNESS 3/8 (10) OR MORE OF GLASSWOOL OR POLYETHYLENE FOAM) IS REQUIRED.
4. THOUGH THE INSTALLATION IS ACCEPTABLE UP TO MAXIMUM OF 26 (660) SQUARE CEILING OPENING, KEEP THE CLEARANCE OF 1-3/4 (45) OR LESS BETWEEN THE MAIN UNIT AND THE CEILING OPENING SO THAT THE PANEL OVERLAP ALLOWANCE CAN BE ENSURED.

ITEM	PART NAME	REMARK
8	DRAIN HOSE (ACCESSORY)	I.D. φ1 (25) (OUTLET)
7	SUCTION GRILLE	
6	AIR DISCHARGE GRILLE	
5	REMOTE CONTROL CODE AND CONTROL WIRING CONNECTION	
4	POWER SUPPLY CONNECTION	
3	DRAIN PIPE CONNECTION	VP20 (O.D. φ1-1/32 (26))
2	GAS PIPE CONNECTION	φ1/2 (12.7) (FLARE CONNECTION)
1	LIQUID PIPE CONNECTION	φ1/4 (6.4) (FLARE CONNECTION)

BYFQ60B8W1U — Decoration Panel (Option) —

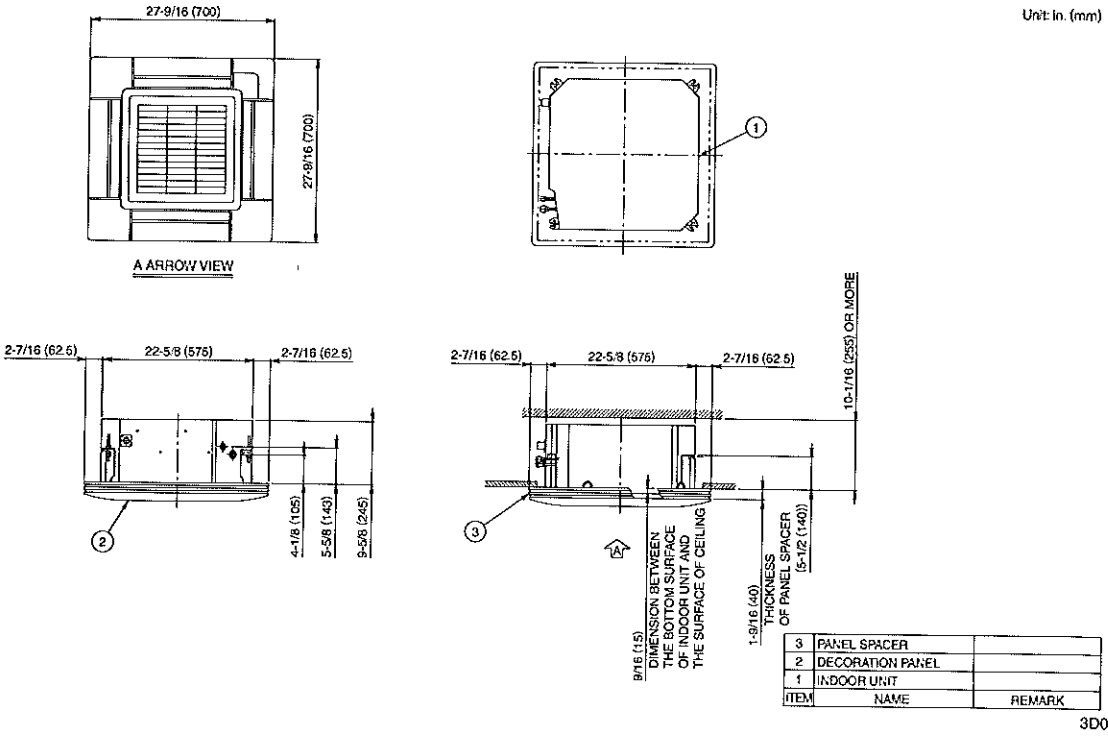

ITEM	NAME	REMARK
3	PANEL SPACER	
2	DECORATION PANEL	
1	INDOOR UNIT	

10. Sound Level

10.1 Measuring Location

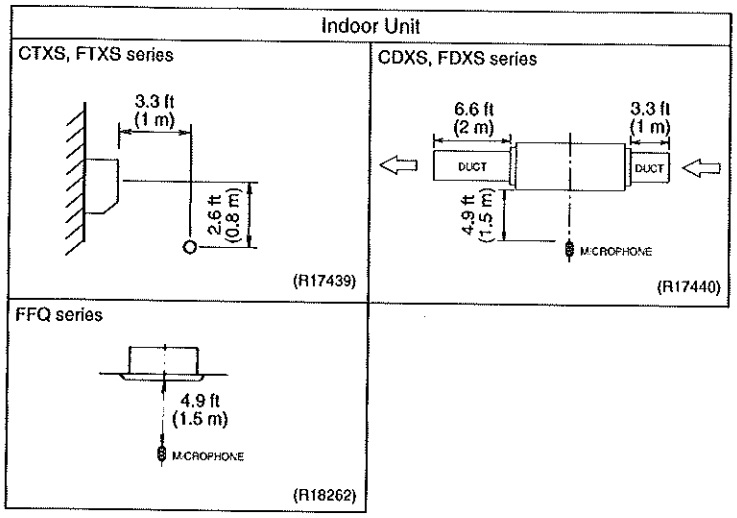

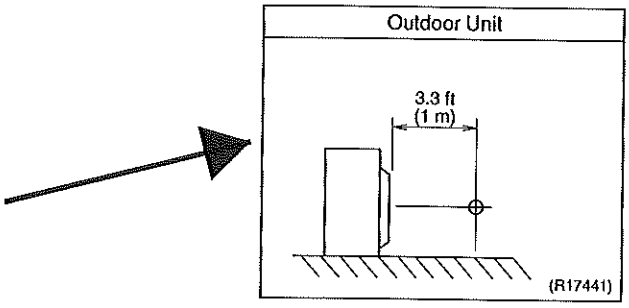

Note:
1. Operation sound is measured in an anechoic chamber.
2. The data are based on the conditions shown in the table below.

Cooling	Heating	Piping Length
Indoor ; 80°FDB (26.7°CDB) / 67°FWB (19.4°CWB) Outdoor ; 95°FDB (35°CDB) / 75°FWB (24°CWB)	Indoor ; 70°FDB (21°CDB) / 60°FWB (15.6°CWB) Outdoor ; 47°FDB (8.3°CDB) / 43°FWB (6°CWB)	16.4 ft (5 m)

FFQ15LVJU

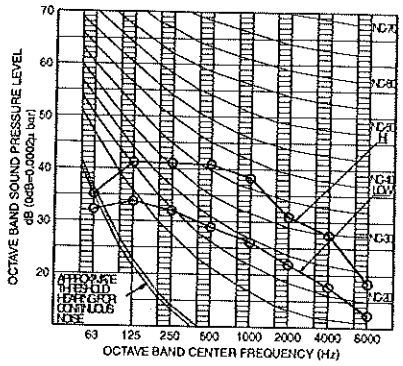

OVER ALL (dB)

SCALE	HI	LOW
A	42.5	31.5

(B.G.N IS ALREADY RECTIFIED)

OPERATING CONDITIONS

POWER SOURCE 208/230V, 60Hz

STANDARD CONDITION (JIS)

4 DIRECTION DISCHARGE

4D080698

FFQ18LVJU

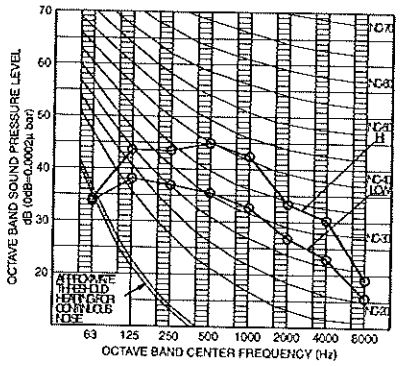

OVER ALL (dB)

SCALE	HI	LOW
A	46.0	37.5

(B.G.N IS ALREADY RECTIFIED)

OPERATING CONDITIONS

POWER SOURCE 208/230V, 60Hz

STANDARD CONDITION (JIS)

4 DIRECTION DISCHARGE

4D080699

10.2.2 Outdoor Unit

2MXS18GVJU

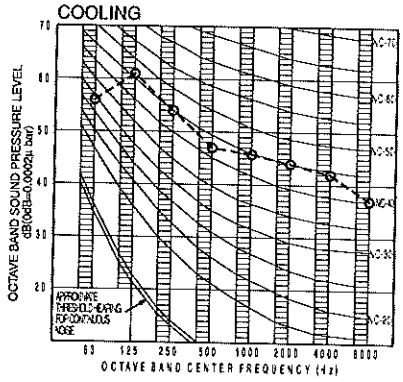

OVER ALL (dB)

SCALE	60Hz 208/230V(H)
A	50

(B.G.N IS ALREADY RECTIFIED)

OPERATING CONDITIONS

POWER SOURCE 208/230V 60Hz

JIS STANDARD (JIS9612)

Cooling

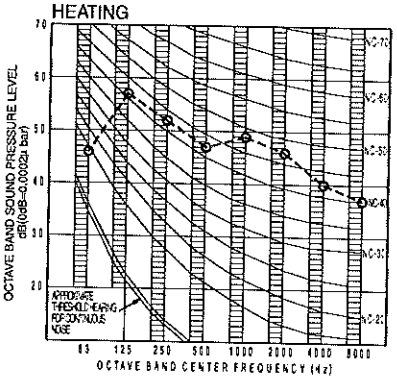

OVER ALL (dB)

SCALE	60Hz 208/230V(H)
A	51

(B.G.N IS ALREADY RECTIFIED)

OPERATING CONDITIONS

POWER SOURCE 208/230V 60Hz

JIS STANDARD (JIS9612)

Heating

3D048472A

3MXS24JVJU, 4MXS32GVJU

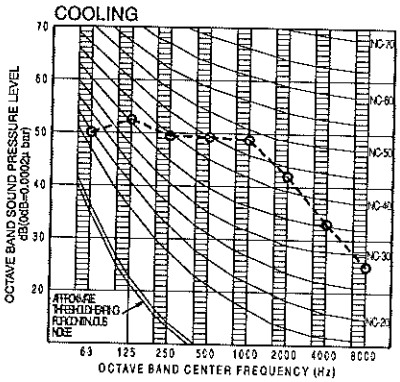

OVER ALL (dB)

SCALE	60Hz 208/230V
A	52

(B.G.N IS ALREADY RECTIFIED)

OPERATING CONDITIONS

POWER SOURCE 208/230V 60Hz

JIS STANDARD (JIS9612)

Cooling

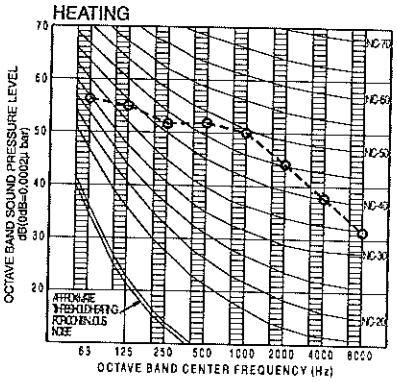

OVER ALL (dB)

SCALE	60Hz 208/230V
A	54

(B.G.N IS ALREADY RECTIFIED)

OPERATING CONDITIONS

POWER SOURCE 208/230V 60Hz

JIS STANDARD (JIS9612)

Heating

3D058787A

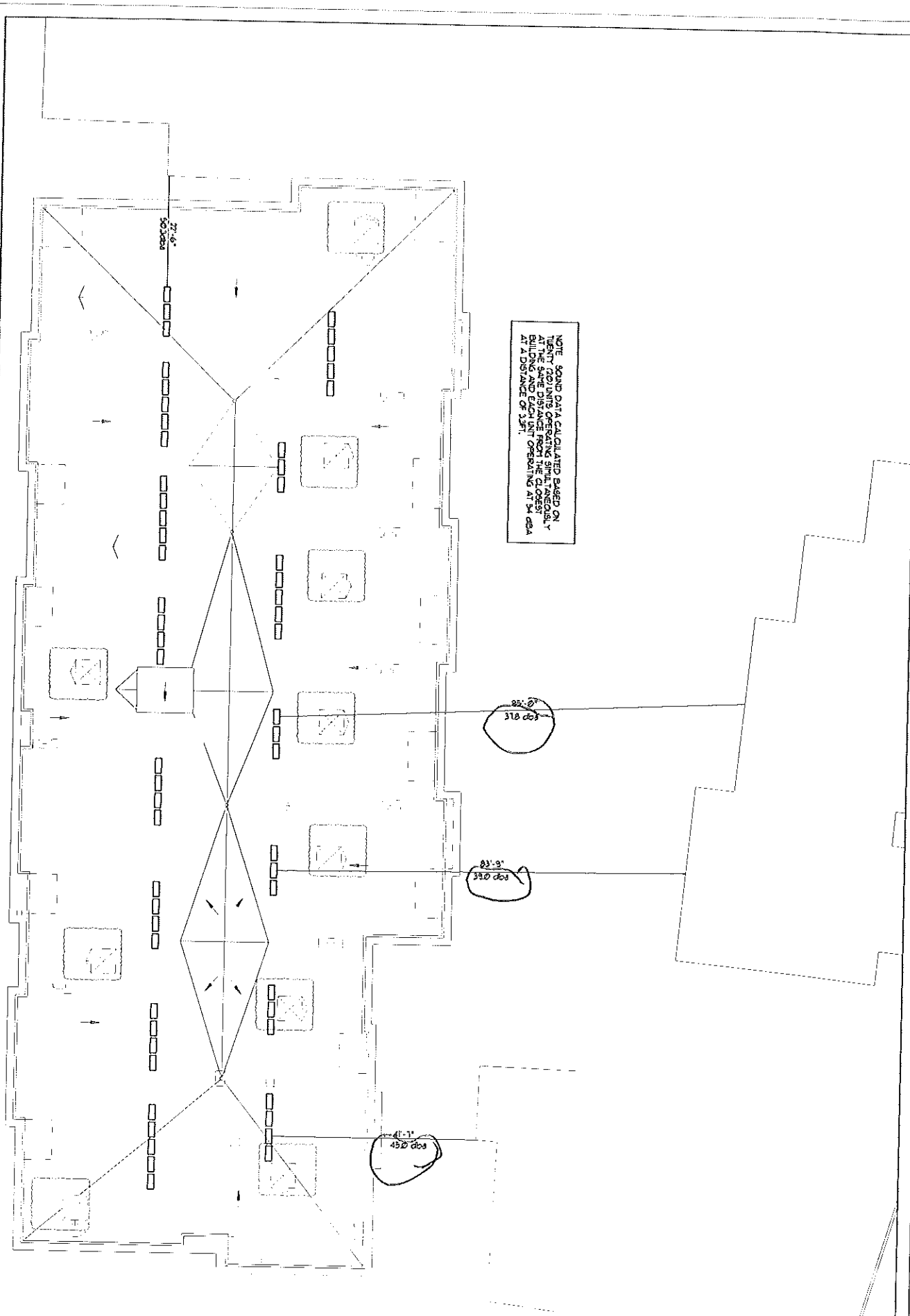

M1.05A	Date 10-30-2014	Scale 1/8" = 1'-0"	Revisions	Project SEAPORT LOFTS	Architect	Consultant BENNETT ENGINEERING	Prepared For
	ROOFTOP EQUIPMENT SOUND DATA		ISSUED FOR PERMIT	NEWBURY HANCOCK ST. PORTLAND ME			