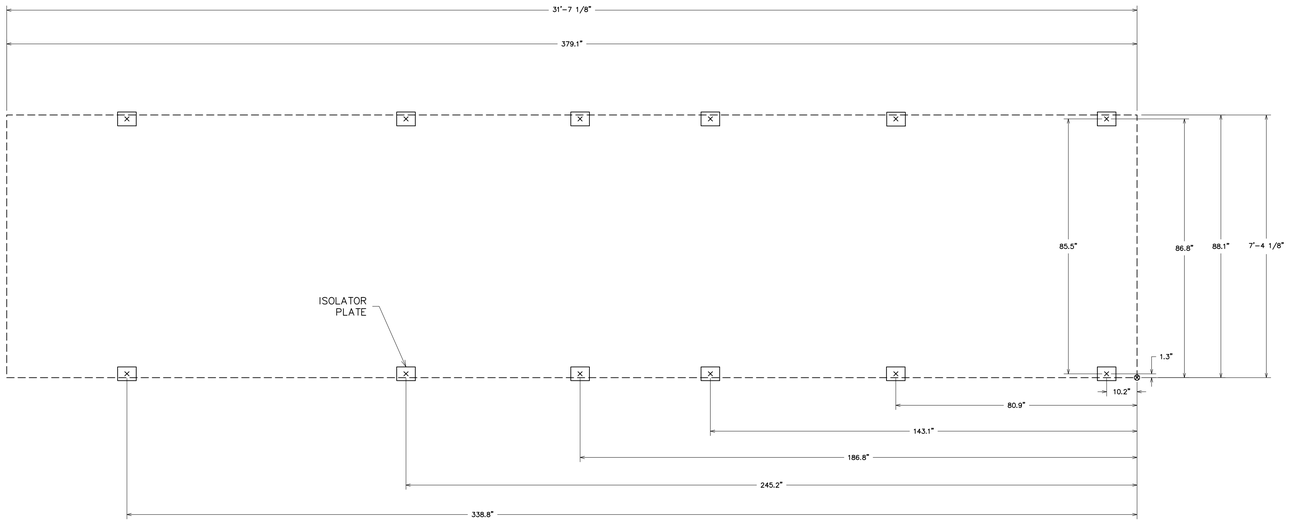

CHILLER PLAN

SCALE: 1/2" = 1'
SEE GENERAL NOTE 10

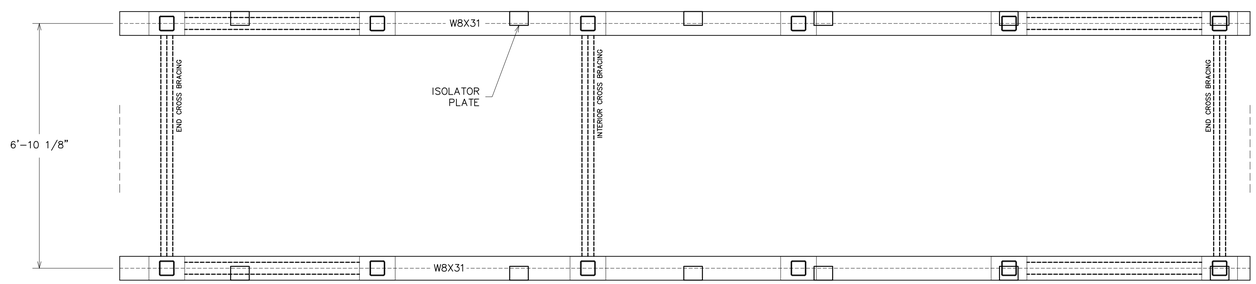

STEEL PLAN (CHILLER)

SCALE: 1/2" = 1'
SEE GENERAL NOTE 10

SIDE STEEL ELEVATION (CHILLER)

SCALE: 1/2" = 1'
SEE GENERAL NOTE 10

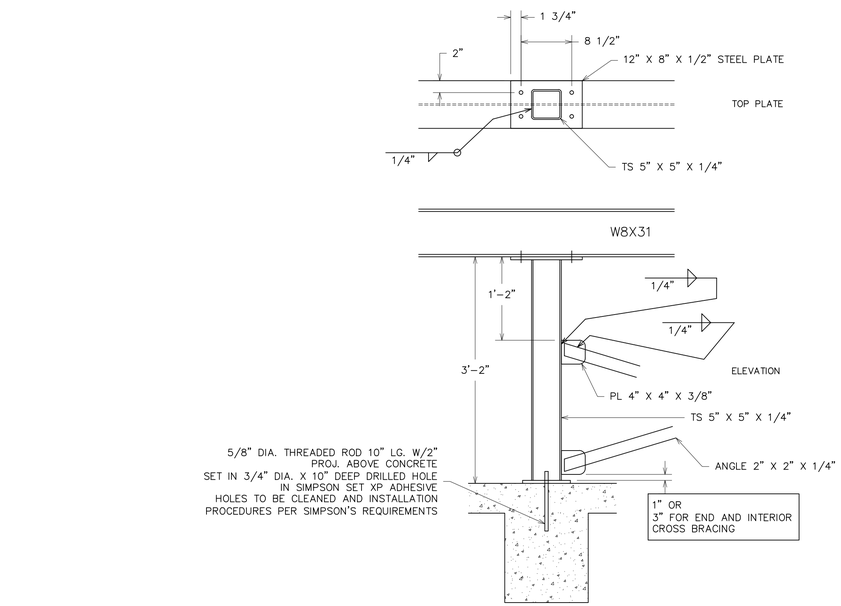

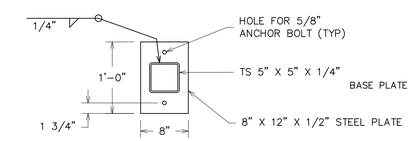

COLUMN DETAIL

SCALE: 1" = 1'

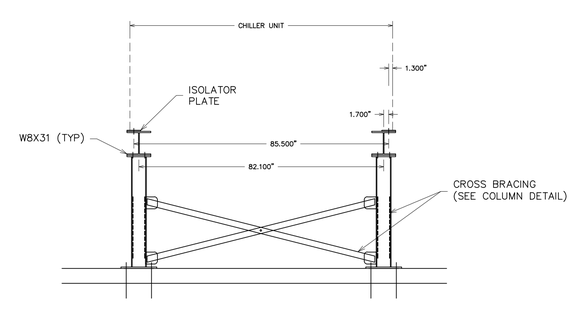

END STEEL ELEVATION (CHILLER)

SCALE: 1/2" = 1'
SEE GENERAL NOTE 10

STEEL LAYOUT AND DETAILS

NO.	DESCRIPTION	DATE
	REVISIONS	

STATE OF MAINE — LEWIS CHAMBERLAIN No. 9762 — LICENSED PROFESSIONAL ENGINEER

S-1

ROOFTOP MECHANICAL UNIT INSTALLATION
SHIPYARD BREWERY
PORTLAND, MAINE

FOR: SEA DOG REALTY
86 NEWBURY STREET
PORTLAND, ME 04101

ATTAR ENGINEERING, INC.
CIVIL ◆ STRUCTURAL ◆ MARINE
1284 STATE ROAD – ELIOT, MAINE 03903
PHONE: (207)439-6023 FAX: (207)439-2128

SCALE: AS NOTED	APPROVED BY:	DRAWN BY: CLS
DATE: 10/15/15		REVISION : DATE – : –
JOB NO: C126-15	CAD FILE: SHIPYARD CHILLER 2	SHEET S-1