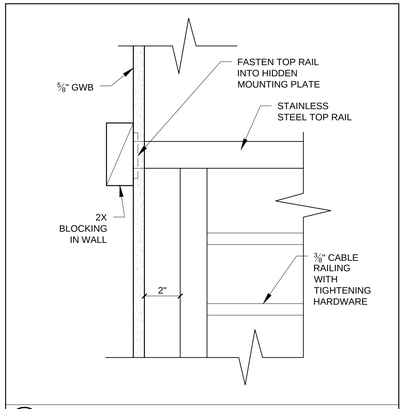

6 ELEVATION DETAIL AT UNIT #3 INTERIOR GUARDRAIL
3" = 1'-0"

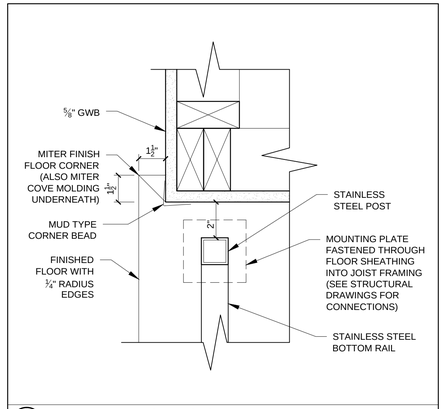

5 PLAN DETAIL AT UNIT #3 INTERIOR GUARDRAIL
3" = 1'-0"

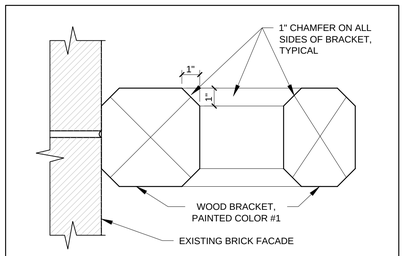

8 PLAN DETAIL AT BRACKET CHAMFER, TYPICAL FOR ALL BRACKETS
3" = 1'-0"

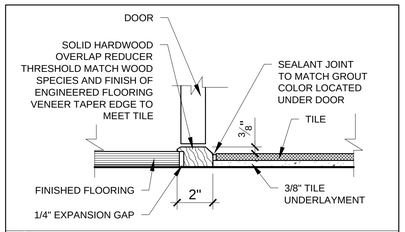

9 FLOORING TRANSITION FROM ENGINEERED HARDWOOD TO TILE
3" = 1'-0"

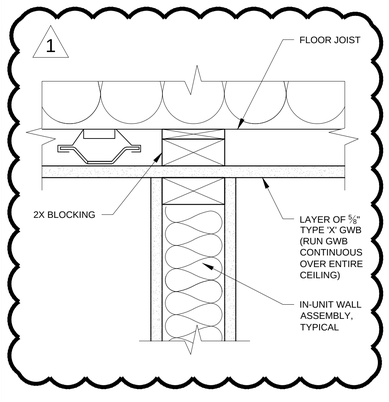

10 TYPICAL SECTION DETAIL AT HEAD OF INTERIOR WALL IN UNITS
3" = 1'-0"

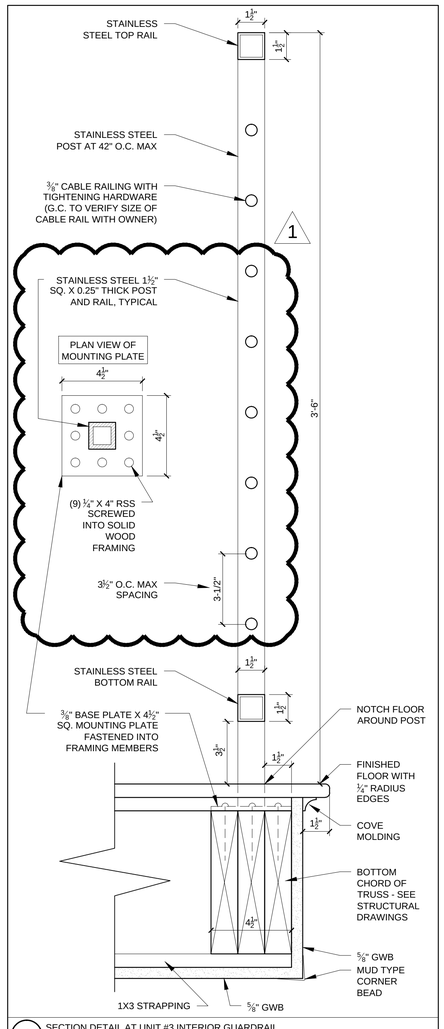

4 SECTION DETAIL AT UNIT #3 INTERIOR GUARDRAIL
3" = 1'-0"

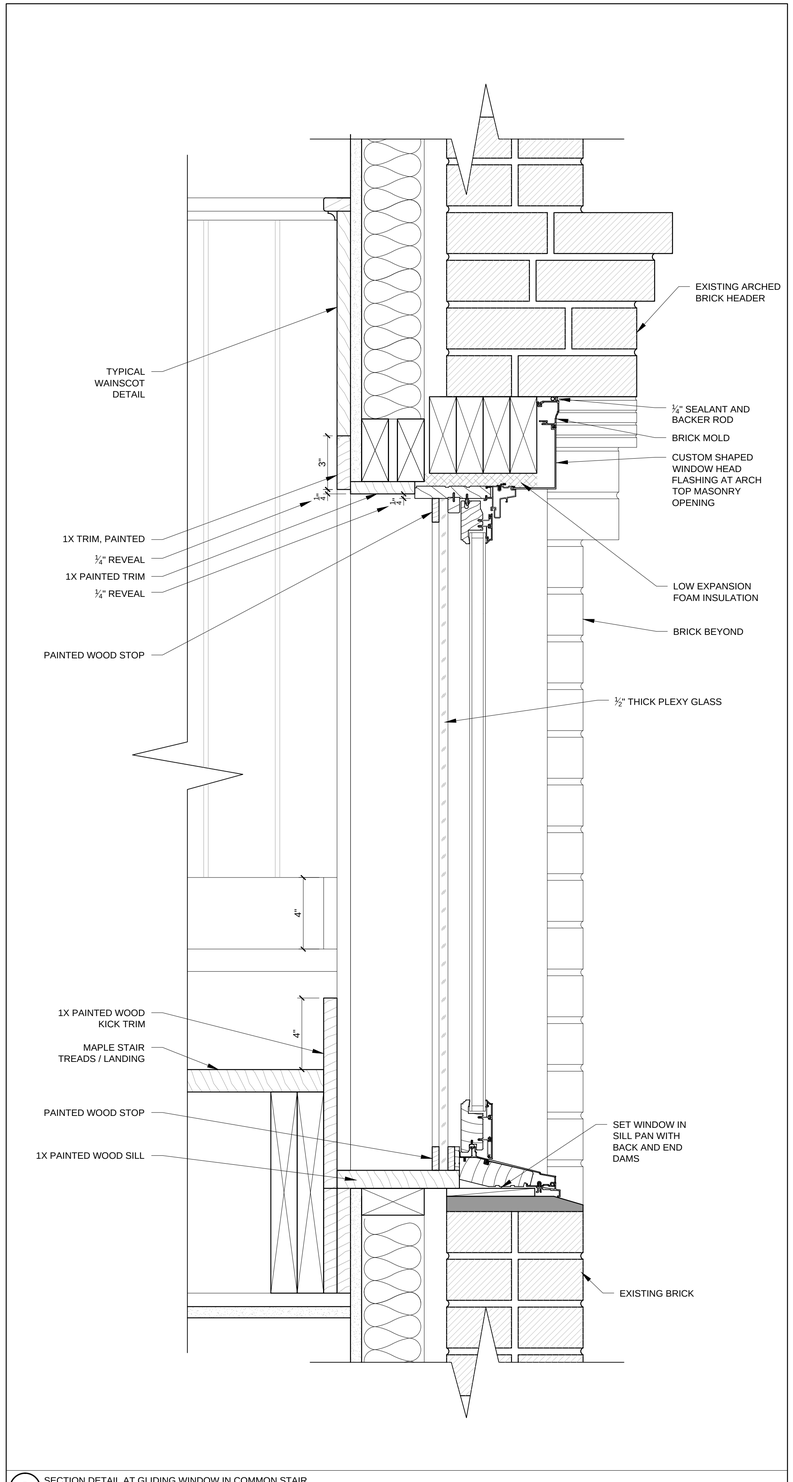

3 SECTION DETAIL AT GLIDING WINDOW IN COMMON STAIR
3" = 1'-0"

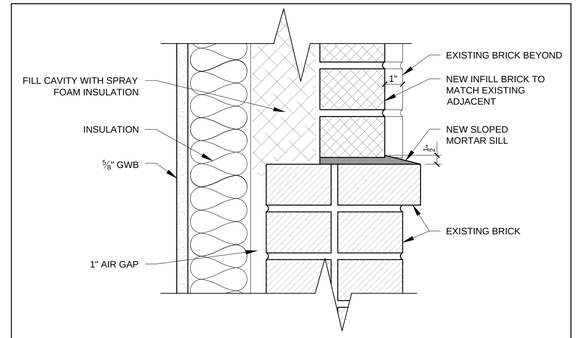

7 SECTION DETAIL AT INFILL BRICK SILL, TYPICAL
3" = 1'-0"

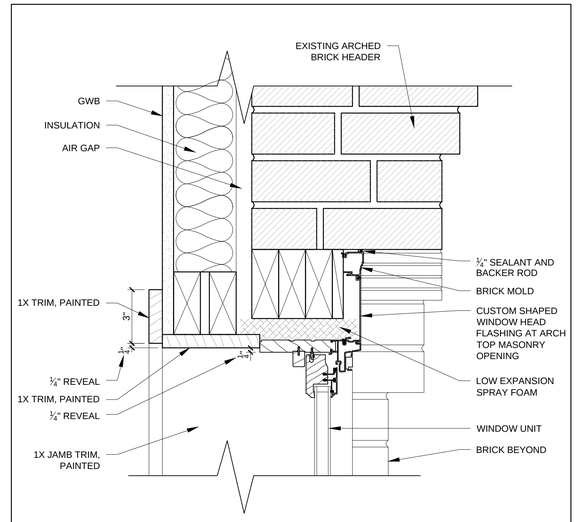

2 SECTION DETAIL AT WINDOW HEAD
3" = 1'-0"

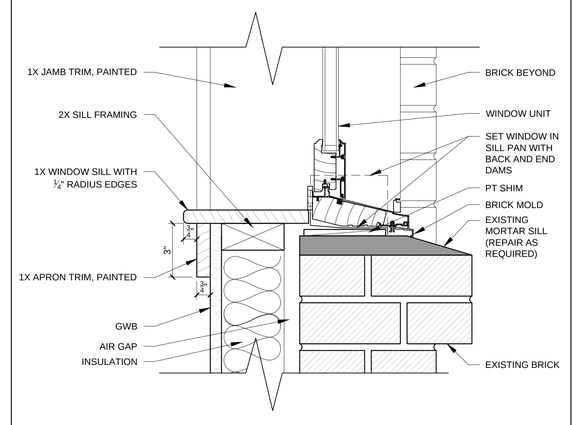

1 SECTION DETAIL AT WINDOW SILL
3" = 1'-0"

REGISTERED ARCHITECT
RYAN J. SENATORE
No. 3322
STATE OF MAINE

© 2016 RYAN SENATORE ARCHITECTURE

RESIDENCES

107 INDIA STREET
PORTLAND, MAINE

RSA
RYAN SENATORE ARCHITECTURE
565 CONGRESS STREET
PORTLAND, MAINE 04101
207-747-5159
senatorearchitecture.com

CONSULTANTS:

STRUCTURAL:
Structural Integrity
77 Oak Street
Portland, ME 04101
207-774-4614

REVISIONS:
1 REVISION #1 - 04/05/16

DATE:	FEBRUARY 05, 2016
PROJECT No.	
DRAWN BY:	RRT
CHECKED BY:	RJS
SCALE:	AS NOTED

SHEET TITLE:
DETAILS

A5-3