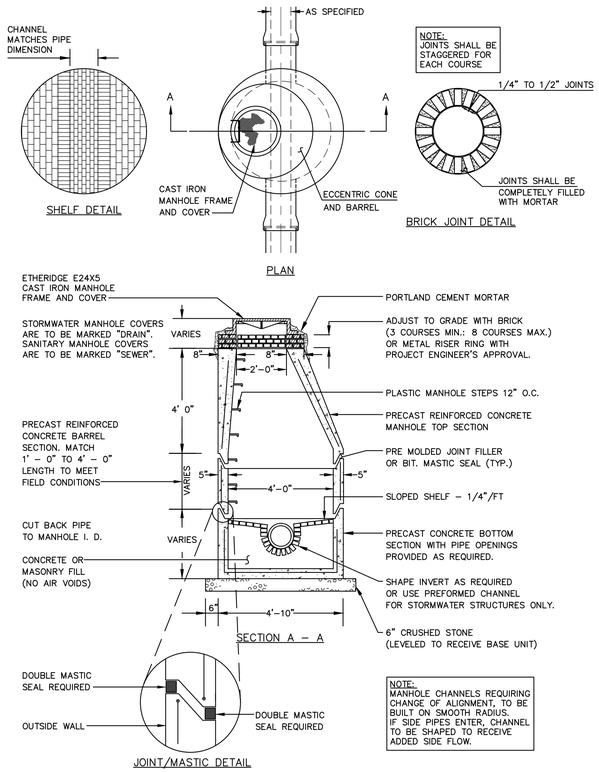

PRECAST CONCRETE MANHOLE

N.T.S.

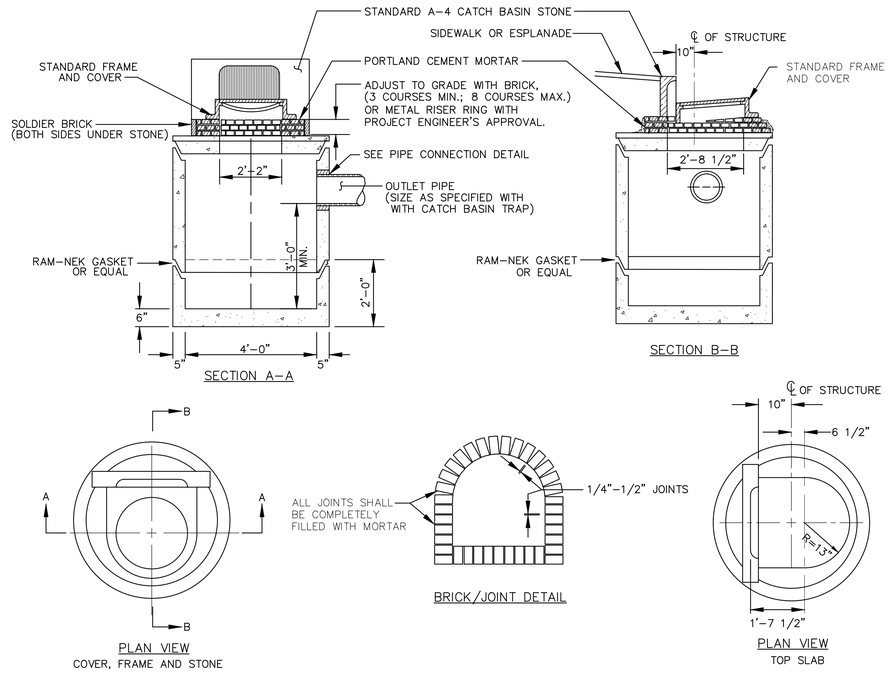

PRECAST CONCRETE CATCH BASIN - TYPE "E"

N.T.S.

NOTE:
ALL MANHOLE COVERS SHALL BE SOLID AND SHALL HAVE ONE 7/8" DIAMETER DRILLED PICK HOLE, LOCATED 8" FROM THE CENTER OF THE COVER.

ALL SANITARY MANHOLE COVERS SHALL HAVE "SEWER" CAST INTO THE COVER. ALL STORMWATER/DRAIN MANHOLE COVERS SHALL HAVE "DRAIN" CAST INTO THE COVER.

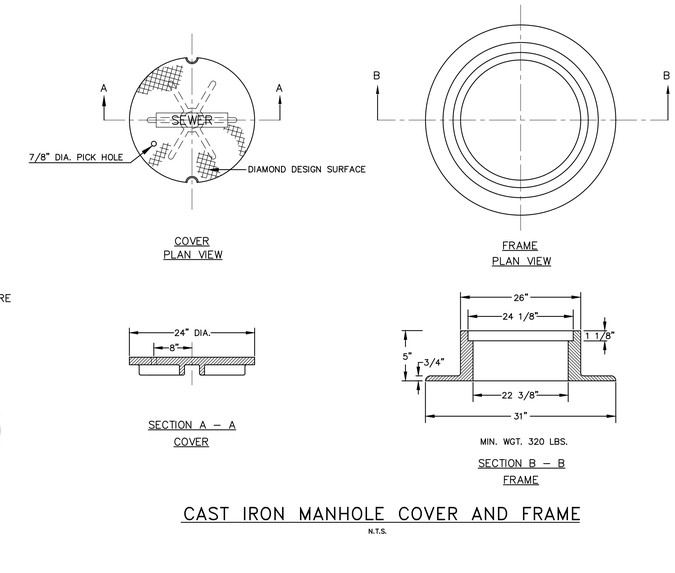

CAST IRON MANHOLE COVER AND FRAME

N.T.S.

GENERAL NOTES FOR MANHOLES AND CATCH BASINS

1. ALL CONCRETE SHALL HAVE A MINIMUM ULTIMATE COMPRESSIVE STRENGTH OF 4000 lbs. PER SQ. INCH AT THE END OF 28 DAYS, UNLESS OTHERWISE NOTED.
2. MANHOLES MAY BE CONSTRUCTED OF PRECAST REINFORCED CONCRETE, OR CAST IN PLACE.
3. PRECAST REINFORCED CONE BARREL MANUFACTURED PER ASTM SPEC. C-478.
4. ALL STORM AND SEWER MANHOLE COVERS SHALL BE SOLID AND SHALL HAVE ONE 7/8" DIAMETER DRILLED PICK HOLE LOCATED 8" FROM THE CENTER OF THE COVER.
5. ALL SANITARY MANHOLE COVERS SHALL HAVE "SEWER" CAST INTO THE COVER. ALL STORMWATER/DRAIN MANHOLE COVERS SHALL HAVE "DRAIN" CAST INTO THE COVER.
6. ALL MANHOLE RISERS SHALL BE ETHERIDGE 24" OR APPROVED EQUAL.
7. SEWER BRICK SHALL CONFORM TO ASTM SPEC. DESIGNATE ON C-32-63, GRADE MA AND SA.
8. ALL SANITARY MANHOLES SHALL HAVE A WATERPROOFING COATING APPLIED TO THE EXTERIOR SURFACE.
9. CATCH BASIN FRAMES FOR TYPE A4 CATCH BASIN CURB INLETS SHALL BE ETHERIDGE DR5A OR APPROVED EQUAL.
10. CASTINGS SHALL CONFORM TO ASTM DESIGNATION A48-CLASS 35.
11. EXISTING MANHOLES, CATCH BASINS, FRAMES, AND COVERS SHALL BE SALVAGED BY THE CONTRACTOR, AND SHALL REMAIN THE PROPERTY OF THE CITY OF PORTLAND.
12. ALL CATCH BASIN OUTLETS SHALL BE INSTALLED WITH A CASCO TRAP. SEE FIGURE II-09.

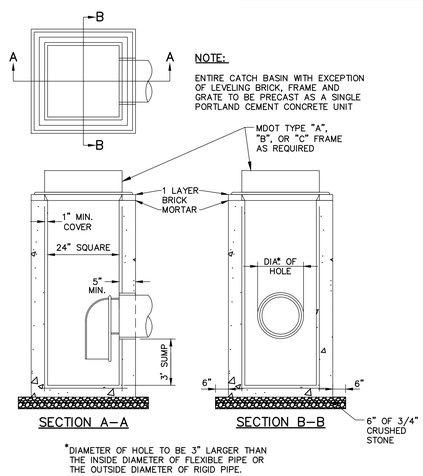

CATCH BASIN TYPE "F"

N.T.S.

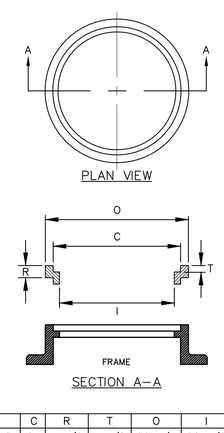

SIZE	C	R	T	O	I	Wt.
R241 1/2	24	1 1/2	1 1/8	26 1/4	22 1/2	60
R242	24	2	1 1/8	26 1/4	22 1/2	80
R242 1/2	24	2 1/2	1 1/8	26 1/4	22	100
R243	24	3	1 1/8	26 1/4	22	120

MANHOLE RISER RING

N.T.S.

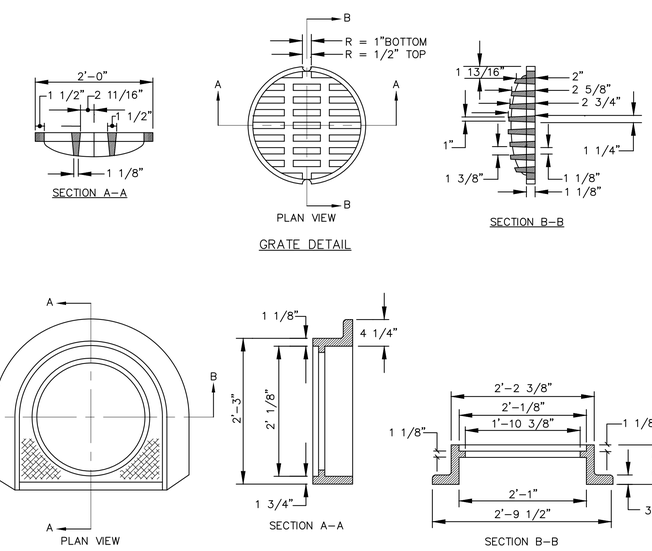

CATCH BASIN FRAME & GRATE

N.T.S.

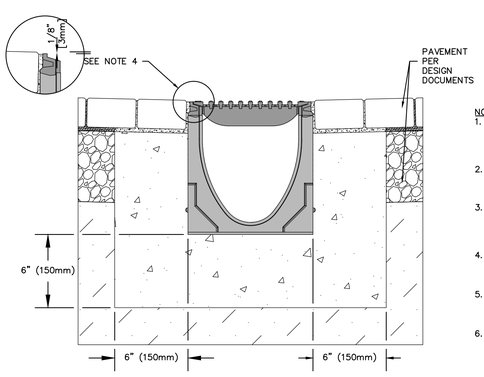

NOTES:
1. IT IS NECESSARY TO ENSURE MINIMUM DIMENSIONS SHOWN ARE SUITABLE FOR EXISTING GROUND CONDITIONS. ENGINEERING ADVICE MAY BE REQUIRED.
2. MINIMUM CONCRETE STRENGTH OF 4,000 PSI IS RECOMMENDED. CONCRETE SHOULD BE VIBRATED TO ELIMINATE AIR POCKETS.
3. EXPANSION AND CONTRACTION CONTROL JOINTS AND REINFORCEMENT ARE RECOMMENDED TO PROTECT CHANNEL AND CONCRETE SURROUND. ENGINEERING ADVICE MAY BE REQUIRED.
4. THE FINISHED LEVEL OF THE CONCRETE SURROUND MUST BE APPROX. 1/8" [3mm] ABOVE THE TOP OF THE CHANNEL EDGE.
5. CONCRETE BASE THICKNESS SHOULD MATCH SLAB THICKNESS. ENGINEERING ADVICE MAY BE REQUIRED TO DETERMINE PROPER LOAD CLASS.
6. REFER TO ACO'S LATEST INSTALLATION INSTRUCTIONS FOR FURTHER DETAILS.

SLOPED CHANNEL DRAIN

N.T.S.

41 Hutchins Drive
Portland, Maine 04102
800.426.4262 | www.woodardcurran.com
WOODARD & CURRAN
COMMITMENT & INTEGRITY DRIVE RESULTS

THIS DOCUMENT IS THE PROPERTY OF WOODARD & CURRAN INC., AND ITS CLIENT. REPRODUCTION OR MODIFICATION WITHOUT WRITTEN PERMISSION IS PROHIBITED.

REV.	DESCRIPTION	DATE

DESIGNED BY:
DRAWN BY:
CHECKED BY: 02306373.37 C30X.dwg

CIVIL DETAILS - 2

CITY OF PORTLAND
PORTLAND, MAINE 04101

THAMES STREET EXTENSION PROJECT

JOB NO.:0230637.37
DATE:MAY 2018
SCALE:
SHEET: 9 OF 13

C-301

\\woodardcurran.net\shared\Projects\0230637.00 Portland ME - 2017 Grnt Eng Svs\wb\37 Eastern Waterfront Roadway Ext Design\Drawings\Civil\0230637.37 C30X.dwg, May 04, 2018 - 3:11pm