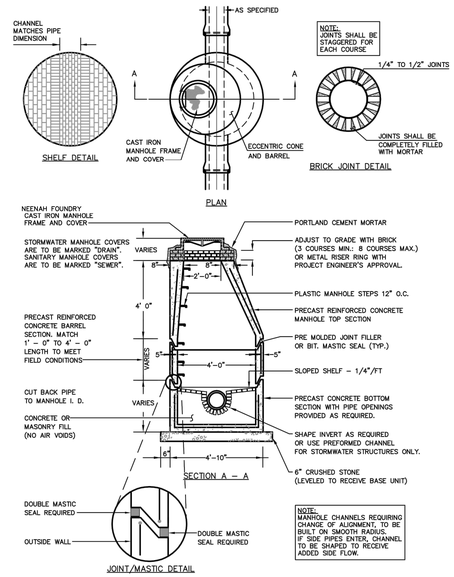

(A) PRECAST CONCRETE MANHOLE

N.T.S.

AS OBTAINED FROM THE CITY OF PORTLAND "TECHNICAL MANUAL"

NOTES

1. ALTERNATIVE CONSTRUCTION METHODS OR PAYMENT METHODS SHALL BE APPROVED IN ADVANCE BY THE CITY.
2. IN PAVED AREAS, DEPTHS OF GRAVEL AND HOT MIX ASPHALT PAVEMENT SHALL MATCH THE GREATER OF EXISTING CONDITIONS OR THE REQUIREMENTS FOR THE CORRESPONDING STREET CLASSIFICATION.
3. DIMENSION **B** SHALL BE SUFFICIENT TO ALLOW CRUSHED STONE BEDDING TO BE PLACED AND COMPACTED UNDER THE HAUNCHES OF THE PIPE; BUT IN ALL CASES DIMENSION **B** SHALL BE AT LEAST 9".
4. DIMENSION **A** IS THE MAXIMUM WIDTH ALLOWED FOR CALCULATING PAY QUANTITIES UNDER GRANULAR BORROW, CRUSHED STONE, STRUCTURAL EARTH EXCAVATION, AND STRUCTURAL ROCK EXCAVATION. DIMENSION **A** SHALL BE BASED ON PIPE DIAMETER **D**, AS SET FORTH IN THE FOLLOWING TABLE.

PIPE DIAMETER, **D** (INCHES)	MAX. TRENCH WIDTH, **A** (FEET)
4	4.0
6	4.0
8	4.0
10	4.0
12	5.0
15	5.0
18	5.0
21	5.0
24	6.0
27	6.0
30	6.0
36	6.0
42	7.0
48	7.0

NOTES:
DEPTH OF BITUMINOUS PAVEMENT AND AGGREGATE COURSES SHALL BE DETERMINED BY STREET CLASSIFICATION.

ANY ALTERNATE TRENCHING OR PAYMENT METHODS SHALL BE APPROVED IN ADVANCE BY THE CITY OF PORTLAND, DEPARTMENT OF PUBLIC SERVICES..

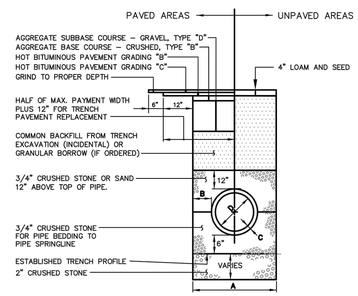

(D) TYPICAL PIPE TRENCH INSTALLATION AND NOTES

N.T.S.

AS OBTAINED FROM THE CITY OF PORTLAND "TECHNICAL MANUAL"

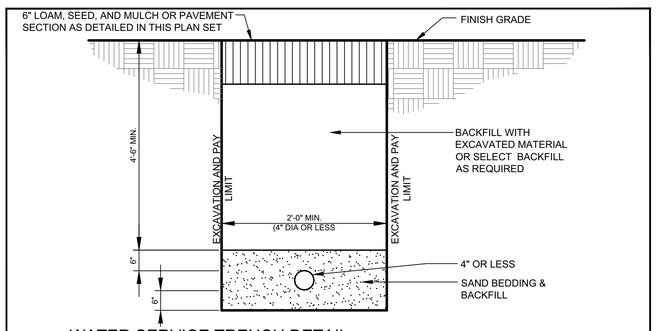

(B) WATER SERVICE TRENCH DETAIL

N.T.S.

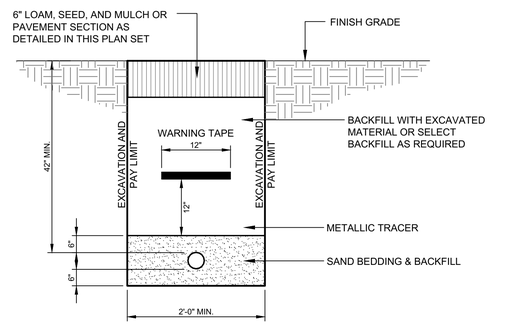

NOTE:
GAS LINE TO BE INSTALLED BY OTHERS. SITE CONTRACTOR IS RESPONSIBLE FOR EXCAVATION AND BACKFILL OF THE GAS LINE AND PLACEMENT OF THE WARNING TAPES AND TRACER.

(E) GAS SERVICE TRENCH SECTION

N.T.S.

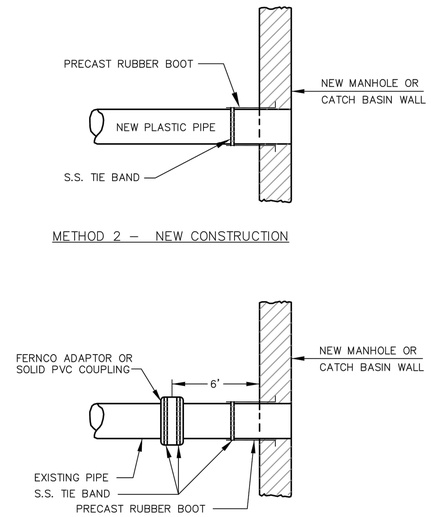

PLASTIC PIPE CONNECTIONS

NOT TO SCALE

(H) PLASTIC PIPE CONNECTION METHODS 1 & 2

N.T.S.

AS OBTAINED FROM THE CITY OF PORTLAND "TECHNICAL MANUAL"

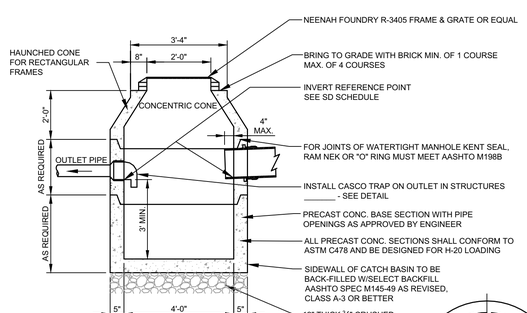

NOTE:
WHERE DEPTH OF COVER IS NOT SUFFICIENT TO USE CONCENTIC OR TRUNCATED CONE, A FLAT TOP MAY BE USED.

(H) 4'-0" PRECAST CATCH BASIN

N.T.S.

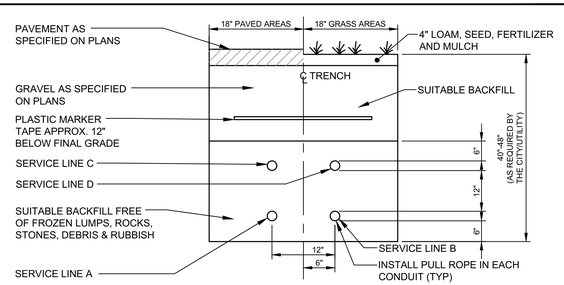

CONDUIT TYPE

SERVICE	CONDUIT SIZE	GRASS AREAS	PAVED AREAS	UTILITY	REMARKS
A	2-6"	SCHEDULE 40 PVC ELECTRICAL GRADE	RIGID GALVANIZED STEEL, ASTM A120*	POWER	SEE NOTE
B	2-4"	SCHEDULE 40 PVC	RIGID GALVANIZED STEEL, ASTM A120*	TELEPHONE	SEE NOTE
C	2-4"	SCHEDULE 40 PVC	RIGID GALVANIZED STEEL, ASTM A120*	COMMUNICATION	SEE NOTE
D	2-4"	SCHEDULE 40 PVC	RIGID GALVANIZED STEEL, ASTM A120*	SPARES	SEE NOTE

*AS REQUIRED BY CITY /UTILITY

NOTES:
1. ONE CONDUIT CAPPED FOR SPARE. PROVIDE GALVANIZED STEEL LONG SWEEP AT RISER POLE AND EXTEND GALVANIZED CONDUIT TO 10' ABOVE GRADE AT POLE WITH STAND-OFF BRACKETS. COORDINATE WITH ELECTRICAL SITE PLANS BY E.S. BOULOS.
2. IN CITY RIGHT OF WAY, CONDUITS TO HAVE 36" MIN. COVER AND BE ENCASED WITH MIN. 3" CONCRETE ON ALL SIDES.

(F) UTILITY TRENCH - PRIMARY ELEC., TEL. & COMM.

N.T.S.

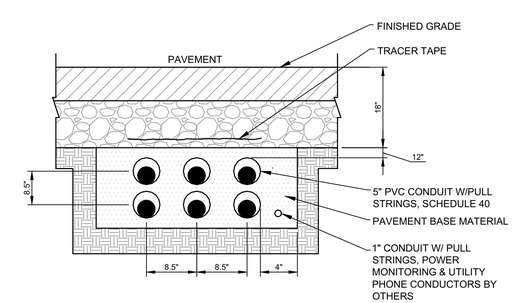

NOTES:
1. CONDUIT BANK WILL EXTEND 5' BEYOND FOUNDATION WALL. CAP ALL CONDUITS.

(I) SECONDARY UNDERGROUND ELECTRIC CONDUIT BANK DETAIL

N.T.S.

Stantec
482 Payne Road Scarborough Court
Scarborough, Maine 04074-8929
Tel. 207.883.3355
www.stantec.com

Copyright Reserved
The Contractor shall verify and be responsible for all dimensions. DO NOT scale the drawing - any errors or omissions shall be reported to Stantec without delay.
The Copyrights to all designs and drawings are the property of Stantec. Reproduction or use for any purpose other than that authorized by Stantec is forbidden.

Consultants

ARCHITECT
ARCHETYPE

LANDSCAPE ARCHITECT
MOHR & SEREDIN

SURVEYOR
OWEN HASKELL

CONTRACTOR
CIANBRO

Notes

Revision	By	Appd.	YY.MM.DD
4 ISSUED FOR CONSTRUCTION \FINAL PLANS	SRB	SRB	17.10.20
3 REVISED PER CONDITIONS OF APPROVAL\RELEASED FOR BIDDING	SRB	SRB	17.10.10
2 RESUBMITTED FOR FINAL SITE PLAN REVIEW PRIOR TO OCT. 4, 2017 PUBLIC HEARING	SRB	SRB	17.09.24
1 FINAL SITE PLAN REVIEW	SRB	SRB	17.08.08

File Name: 195350450_det	LA	DBS	SRB	17.07.12
P.E. STEPHEN R. BUSHEY	DWN.	CHKD.	DSGN.	DATE

Permit-Seal

STATE OF MAINE
STEPHEN R. BUSHEY
No. 7429
LICENSED
PROFESSIONAL ENGINEER
10/27/17

Client/Project
0 HANCOCK STREET LLC

THAMES STREET SITE
PORTLAND, MAINE

Title
STORMDRAIN AND UTILITY DETAILS

Project No. 195350450
Scale N.T.S.

Sheet
C-6.1

Reviewed for Code Compliance Inspections Division Approved: 10/27/17 Date:
V:\1953\active\195350450\civil\cadd\permit\dwg\195350450_det.dwg pltlastsz 10/20/2017 3:07 PM