SUMMIT
GEOENGINEERING SERVICES

Submittal Review Fo

Reviewed for Code Compliance
Inspections Division
Approved with Conditions
Date: 10/27/17

SUBMITTAL REVIEW FORM

Project #: 17181
Submittal #: 17181-SM1
Project Description: Wex Building
Location: Corner of Hancock and Thames St, Portland ME
Date Received: 10/12/2017
Date Reviewed: 10/23/2017

SHOP DRAWING / SUBMITTAL REVIEW

☒ APPROVED ☐ APPROVED WITH CHANGES NOTED
☐ REVISE AND RESUBMIT ☐ REJECTED:

SUBMITTAL WAS REVIEWED FOR DESIGN CONFORMITY AND GENERAL CONFORMANCE TO CONTRACT DOCUMENTS ONLY. THE CONTRACTOR IS RESPONSIBLE FOR CONFIRMING AND CORRELATING DIMENSIONS AT JOB SITES FOR TOLERANCES, CLEARANCES, QUANTITIES, FABRICATION PROCESSES AND TECHNIQUES OF CONSTRUCTION, COORDINATION OF HIS WORK WITH OTHER TRADES AND FULL COMPLIANCE WITH THE CONTRACT DOCUMENTS.

BY Matt Hahn DATE 10/23/17

SUMMIT GEOENGINEERING SERVICES, INC.
145 Lisbon Street, Suite 701
Lewiston, Maine 04240

Review and potential approval is based only on general conformance of the submitted documents to the design concept of the project and specifications provided in the Contract Documents. The contractor remains responsible for dimensions and material quantities, which shall be confirmed and correlated in the field. Any revisions shown in this review is subject to the requirements of the project specifications and drawings, and the contractor is responsible to uphold satisfactory fabrication, installation, and performance of the work.

H. B. FLEMING, INC.
Contracting & Engineering
89 Pleasant Avenue
South Portland, ME 04106

Phone (207) 799-8514

LETTER OF TRANSM

DATE: 10/5/2017
JOB NO.:
ATTENTION: BRIAN LARSEN

CITY OF PORTLAND, MAINE — RESURGAM
Reviewed for Code Compliance
Inspections Division
Approved with Conditions
Date: 10/27/17

TO: CIANBRO
ATTN: BRIAN LARSEN

RE: WEX BUILDING PILE SUBMITTAL

WE ARE SENDING YOU ☒ Attached ☐ Under separate cover via _____ the following items:

☒ Shop drawings ☐ Prints ☐ Plans ☐ Samples ☐ Specifications
☐ Copy of letter ☐ Change order ☐ _____

COPIES	DATE	NO.	DESCRIPTION
1	10/5/17	1	PILE SUBMITTAL

THESE ARE TRANSMITTED as checked below:

☒ For approval ☐ Approved as submitted ☐ Resubmit _____ copies for approval
☐ For your use ☐ Approved as noted ☐ Submit _____ copies for distribution
☐ As requested ☐ Returned for corrections ☐ Return _____ corrected prints
☐ For review and comment ☐ _____
☐ FOR BIDS DUE _____ ☐ PRINTS RETURNED AFTER LOAN TO US

REMARKS

BRIAN,

ATTACHED IS OUR PILE SUBMITTAL FOR THE PROPOSED WEX BUILDING.
PLEASE GIVE ME A CALL WITH ANY QUESTIONS/CONCERNS.

THANKS,
JOHN

COPY TO _____

SIGNED: _____

If enclosures are not as noted, kindly notify us at once.

H.B. FLEMING, INC.

CONTRACTING · ENGINEERING

89 Pleasant Ave. South Portland, ME 04106

Phone 207-799-8514 Fax 207-799-8538

www.hbfleming.com

PDC PILE DRIVING CONTRACTORS ASSO

Reviewed for Code Compliance Inspections Division Approved with Conditions Date: 10/27/17

PILE DRIVING BRIDGES SUBMARINE PIPELINES

SUBMITTAL

Submitted To:
Client: CIANBRO
Attention: Brian Larsen

Date: 10/05/2017
Project: WEX Building
Location: Portland, ME

Subject: Pile Driving Criteria

H.B. Fleming Proposes to use the following driving criteria for the piles to be installed at the above location.

Hammer(s)

- Either an APE D-19 or an MKT DE 42 may be used for this project. The details for each hammer are listed below respectfully.
- APE D-19 open ended diesel pile hammer may be used to drive the piles. The D-19 has a ram weight of 4,190 lbs, a maximum stroke of 10-2", and a rated energy of 42,800 ft-lbs.
- MKT DE-42 open ended diesel pile hammer may be used to drive the piles. The DE-42 has a ram weight of 4,200 lbs, a maximum stroke of 10'6", and a rated energy of 42,000 ft-lbs.
- The hammer cushioning material consists of 2 inches of Monocast MC901 material for both hammers.

STATE OF MAINE
JOHN S. LINSCOTT IV
No. 11574
LICENSED PROFESSIONAL ENGINEER

Pile

- HP10x42 ASTM A572 Gr. 50 material.
- The design capacity is 80 tons.
- The ultimate capacity which our analysis is based on is 160 tons.
- Piles will be fitted with cast steel points.

"Scott" PE 10/5/17

Results

- Piles will be driven until a blow count of 7 blows per inch for three consecutive inches with the MKT DE42, or 5 blows per inch with the APE D19-42 hammer.
- If abrupt refusal is encountered, driving will stop when penetration is less than ½" for 7 successive blows with the MKT DE42, or 5 blows for ½" of penetration if driven with the D19-42. This criteria applies to both abutments.
- These criteria are based upon the output generated from the WEAP analysis that follows. If testing of the piles indicates different criteria, the test results will be used to determine driving criteria for production piles.

Signed: _____

John Allen

Reviewed for Code Compliance
Inspections Division
Approved with Conditions
Date: 10/27/17

H.B. FLEMING PILE EQUIPMENT DATA SHEET

Project: WEX
Location: Portland, ME

Date: 10/05/2017
Client: CIANBRO

HAMMER

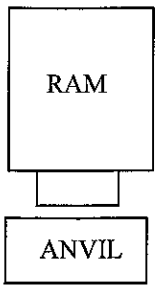

Manufacturer:	APE
Model:	D-19
Type:	Single Acting Diesel
Minimum Drop Height:	10' - 2"
Rated Energy at Drop Height:	42,800 ft-lb
Modifications:	None

HAMMER CUSHION

Material:	Monocast MC901
Thickness:	2"
Area:	283.5 in^2
Modulus of Elasticity:	285 ksi
Coefficient of Restitution:	0.8

DRIVE HEAD

Weight:	1200 lb

PILE CUSHION

Cushion Material:	N/A
Thickness:	N/A
Modulus of Elasticity:	N/A
Coefficient of Restitution:	N/A

PILE

Pile Type:	HP10x42
Length in Leads:	Up to 65'
Weight/LF:	42 lb
Wall Thickness:	0.415"
Taper:	N/A
Cross Sectional Area:	12.4 in^2
Ultimate Capacity	320 kips
Splice Description:	Full Penetration Butt Weld
Tip Treatment Description:	Cast Steel Point

Reviewed for Code Compliance
Inspections Division
Approved with Conditions
Date: 10/27/17

H.B. FLEMING PILE EQUIPMENT DATA SHEET

Project: WEX
Location: Portland, ME

Date: 10/05/2017
Client: CIANBRO

HAMMER

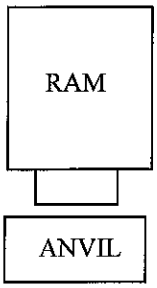

Manufacturer:	MKT
Model:	DE-42
Type:	Single Acting Diesel
Minimum Drop Height:	10' - 6"
Rated Energy at Drop Height:	42,000 ft-lb
Modifications:	None

HAMMER CUSHION

Material:	Monocast MC901
Thickness:	2"
Area:	283.5 in^2
Modulus of Elasticity:	285 ksi
Coefficient of Restitution:	0.8

DRIVE HEAD

Weight:	1200 lb

PILE CUSHION

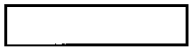

Cushion Material:	N/A
Thickness:	N/A
Modulus of Elasticity:	N/A
Coefficient of Restitution:	N/A

PILE

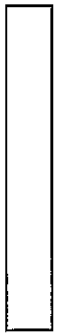

Pile Type:	HP10x42
Length in Leads:	Up to 65'
Weight/LF:	42 lb
Wall Thickness:	0.415"
Taper:	N/A
Cross Sectional Area:	12.4 in^2
Ultimate Capacity	320 kips
Splice Description:	Full Penetration Butt Weld
Tip Treatment Description:	Cast Steel Point

CITY OF PORTLAND, MAINE
Reviewed for Code Compliance
Inspections Division
Approved with Conditions
Date: 10/27/17

APE Model D19-42 Single Acting Diesel Impact Hamme

D19-42 driving H-beam.

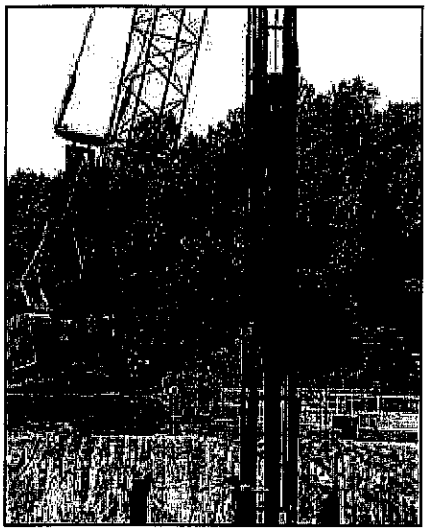

MODEL D19-42 (1.9 metric ton ram)

SPECIFICATIONS

Stroke at maximum rated energy	135 in (343 cm)
Maximum rated energy (Setting 4)	47,132 ft-lbs (63.63 kNm)
Setting 3	39,119 ft-lbs (52.81 kNm)
Setting 2	31,107 ft-lbs (41.99 kNm)
Minimum rated energy (Setting 1)	23,566 ft-lbs (31.81 kNm)
(Variable throttle allows for infinite fuel settings)	
Maximum obtainable stroke	150 in (381 cm)
Maximum obtainable energy	52,362 ft-lbs (71 kNm)
Speed (blows per minute)	34-52

WEIGHTS (Approximate)

Ram	4,189 lbs (1900 kg)
Anvil	749 lbs (340 kg)
Anvil cross sectional area	124.42 in² (802.71 cm²)
Hammer weight (includes trip device)	8,400 lbs (3,810 kg)
Typical operating (weight with DB26 and H-beam insert)	11,052 lbs (5,013 kg)

CAPACITIES

Fuel tank (runs on diesel or bio-diesel)	8.3 gal (31.41 liters)
Oil tank	2.3 gal (8.7 liters)

CONSUMPTION

Diesel or Bio-diesel fuel	1.3 gal/hr (6.6 liters/hr)
Lubrication	0.13 gal/hr (.49 liters/hr)
Grease	8 to 10 pumps every 20 minutes of operation time.

Optional Variable Throttle.

STRIKER PLATE FOR DB 26

Weight	628 lbs (284 kg)
Diameter	22.5 in (57.15 cm)
Area	398 in² (2567.74 cm²)
Thickness	6 in (15.24 cm)

STRIKER PLATE FOR DB 20

Weight	440 lbs (199 kg)
Diameter	17.75 in (45.08 cm)
Area	247 in² (1593.55 cm²)
Thickness	6 in (15.24 cm)

CUSHION MATERIAL

Type	Monocast MC 904
Diameter-DB26	22.5 in (57.15 cm)
Diameter-DB20	17.75 in (45.08 cm)
Thickness	2 in (5.08 cm)
Elastic-modulus	285 ksi (1,965 mpa)
Coeff. of restitution	0.8

Drive Base Assembly.

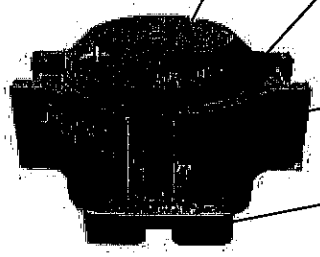

DRIVE CAP

DB 26:	1,076 lbs (488 kg)
DB 20:	750 lbs (340 kg)

INSERT WEIGHT

H-Beam insert for 12" (305 mm) and 14" (355 mm):	948 lbs (430 kg)
Large pipe insert for sizes 12" to 24" diameter:	1,830 lbs (830 kg)

MINIMUM BOX LEAD SIZE/OPERATING LENGTH

Minimum box leader size	8 in x 21 in (20.32 cm x 53.34 cm)
Operating length w/ base and insert	348 in (883.92 cm)

AMERICAN PILEDRIVING EQUIPMENT, INC.
APE
Corporate Offices
7032 South 196th
Kent, Washington 98032 USA
(800) 248-8498 & (253) 872-0141
(253) 872-8710 Fax

Visit our WEB site:
www.apevibro.com
e-mail: ape@apevibro.com

Note: All specifications are subject to change without notice 08/20/2012

CITY OF PORTLAND, MAINE
Reviewed for Code Compliance
Inspections Division
Approved with Conditions
Date: 10/27/17

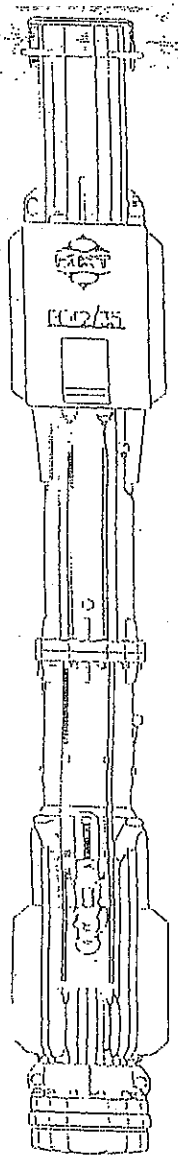

INTRODUCING THE NEW

DE42/35

MAXIMUM DIESEL HAMMER FLEXIBILITY FITTING IN 8 x 20 LEADS WITH RAM WEIGHTS TO 4,200 LBS.

ONE HAMMER...MULTIPLE RAM SIZES... AND ENERGY RANGES. ANOTHER MKT FIRST PROVIDING THE CONTRACTOR WITH HAMMER SIZE FLEXIBILITY AND REDUCED EQUIPMENT INVESTMENT COSTS. MKT DIESEL HAMMERS CONTINUE TO OFFER FEATURES WHICH INSURE DEPENDABLE AND PRODUCTIVE OPERATION. USING EITHER STANDARD OR REMOTE FUEL DELIVERY SYSTEMS.

SPECIFICATIONS DE-42/35		
RAM-PISTON WEIGHT (LBS.)	3,500	4,200
ENERGY RATING (FT.LBS.)	35,000	42,000
BEARING BASED ON ENGINEERING NEWS FORMULA (TONS)	190	230
MAXIMUM OBTAINABLE STROKE	8'-6"	10'-6"
OVERALL LENGTH WITH DRIVE CAP	16'-7"	16'-7"
WEIGHT, HAMMER ONLY (LBS.)	8,600	9,300
WEIGHT, HAMMER AND UNIVERSAL DRIVE CAP (LBS.)	9,550	10,250

PUBLISHED ENERGY RATINGS ARE EQUAL TO RAM WEIGHT X 10.0 FT. RAM STROKE. ACTUAL ENERGIES DELIVERED ARE A FUCTION OF THE OVERALL JOB CONDITIONS. BEARING RATINGS ARE BASED UPON ENGINEERING NEWS FORMULA, PILE SET EQUAL TO 0.1 HEADLOW.

PRODUCT LIST

- SINGLE ACTING DIESEL PILE HAMMERS
- AIR PILE HAMMERS
- VIBRATORY PILE DRIVERS/EXTRACTORS
- VIBRATORY HAMMER ACCESSORIES
- PILE DRIVING LEAD SYSTEMS
- CUSTOM ENGINEERED PRODUCTS
- DOUBLE ACTING DIESEL PILE HAMMERS
- DRIVE CAPS AND ACCESSORIES
- HYDRAULIC POWER UNITS
- HYDRAULIC AUGER SYSTEMS
- BOTTOM BRACES
- LEAD ACCESSORIES

APE D19-42 VARIABLE CAPACITY

H.B. FLEMING
Enter Project Title Here

05-Oct
GRLWEAP (TM) Version

Reviewed for Code Compliance
Inspections Division
Approved with Conditions
Date: 10/27/17

Ultimate Capacity kips	Maximum Compression Stress ksi	Maximum Tension Stress ksi	Blow Count blows/in	Stroke ft	Energy kips-ft
260.0	38.58	1.08	2.9	8.59	23.25
280.0	39.73	1.18	3.3	8.80	23.67
300.0	40.74	1.18	3.8	9.02	24.11
310.0	41.18	1.17	4.0	9.11	24.36
320.0	41.59	1.14	4.4	9.20	24.53
330.0	41.95	1.09	4.7	9.29	24.71
340.0	42.27	1.05	5.1	9.37	24.88
360.0	42.86	0.95	6.0	9.54	25.26
380.0	43.19	0.83	7.3	9.66	25.44
400.0	43.54	0.71	8.8	9.79	25.73

H.B. FLEMING
Enter Project Title Here

05-Oct-2017
GRLWEAP (TM) Version 2005

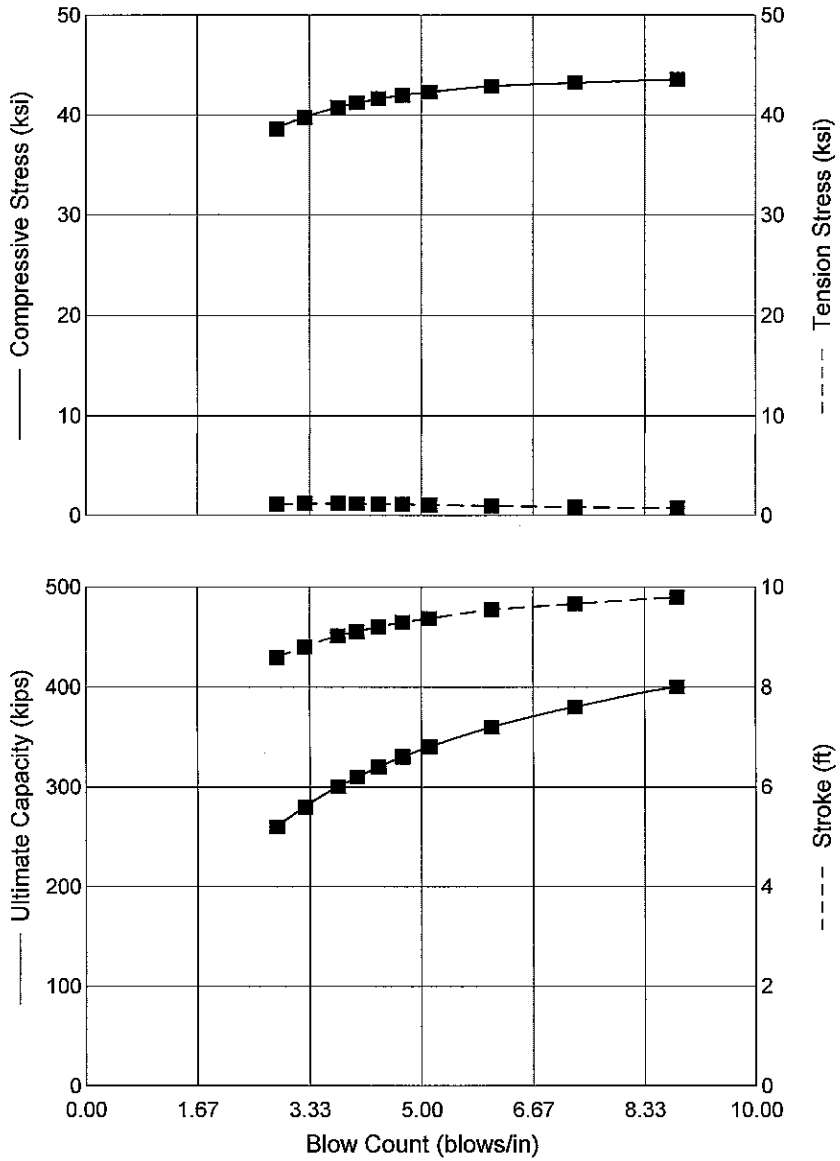

APE D 19-42

Efficiency	0.800	
Helmet	1.20	kips
Hammer Cushion	40399	kips/in
Skin Quake	0.100	in
Toe Quake	0.040	in
Skin Damping	0.148	sec/ft
Toe Damping	0.150	sec/ft
Pile Length	60.00	ft
Pile Penetration	60.00	ft
Pile Top Area	12.40	in2

Pile Model

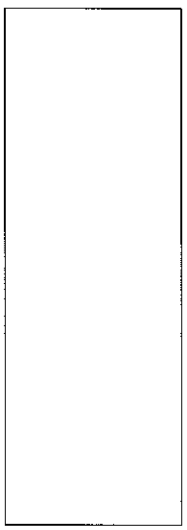

Skin Friction Distribution

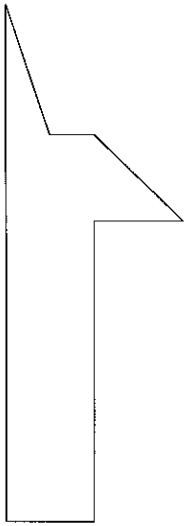

Res. Shaft = 25 %
(Proportional)

APE D19-42 VARIABLE CAPACITY

Date: 10/27/17

Reviewed for Code Compliance
Inspections Division
Approved with Conditions

CITY OF PORTLAND, MAINE

MKT DE42 Variable Capacity

H.B. FLEMING
Enter Project Title Here

05-Oct
GRLWEAP (TM) Version

Reviewed for Code Compliance
Inspections Division
Approved with Conditions
Date: 10/27/17

Ultimate Capacity kips	Maximum Compression Stress ksi	Maximum Tension Stress ksi	Blow Count blows/in	Stroke ft	Energy kips-ft
260.0	36.52	1.56	3.9	7.91	18.96
280.0	37.49	1.54	4.6	8.07	19.34
300.0	38.22	1.44	5.4	8.21	19.62
310.0	38.63	1.40	5.9	8.28	19.76
320.0	38.95	1.16	6.4	8.35	19.97
330.0	39.24	0.98	7.0	8.43	20.13
340.0	39.54	0.76	7.6	8.50	20.27
360.0	39.95	0.03	9.1	8.62	20.54
380.0	40.33	0.00	11.1	8.73	20.78
400.0	40.55	0.00	13.8	8.84	21.00

H.B. FLEMING
Enter Project Title Here

05-Oct-2017
GRLWEAP (TM) Version 2005

MKT DE42 VARIABLE CAPACITY

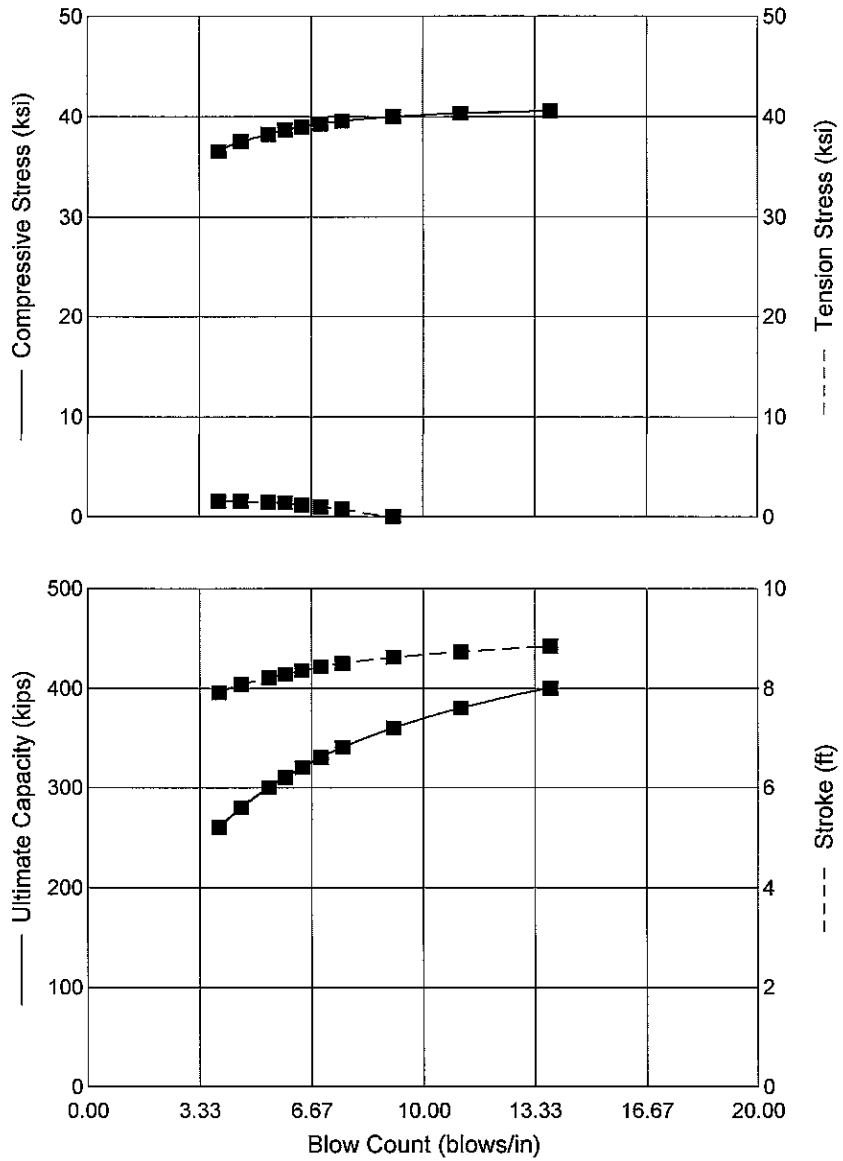

MKT DE 42/35

Efficiency	0.800	
Helmet	1.20	kips
Hammer Cushion	40399	kips/in
Skin Quake	0.100	in
Toe Quake	0.040	in
Skin Damping	0.148	sec/ft
Toe Damping	0.150	sec/ft
Pile Length	60.00	ft
Pile Penetration	60.00	ft
Pile Top Area	12.40	in2

Pile Model

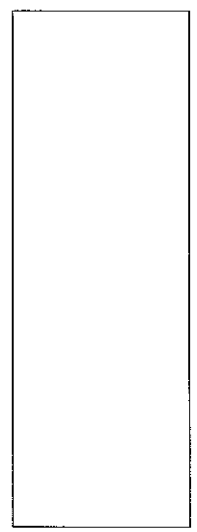

Skin Friction Distribution

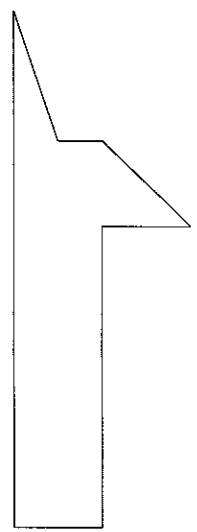

Res. Shaft = 25 %
(Proportional)

Date: 10/27/17

Reviewed for Code Compliance
Inspections Division
Approved with Conditions

CITY OF PORTLAND, MAINE

APE D19 Constant Capacity

Reviewed for Code Compliance
Inspections Division
Approved with Conditions
Date: 10/27/17

H.B. FLEMING
Enter Project Title Here

05-Oct
GRLWEAP (TM) Version

Ultimate Capacity kips	Maximum Compression Stress ksi	Maximum Tension Stress ksi	Blow Count blows/in	Stroke ft	Energy kips-ft
320.0	23.38	1.21	9999.0	3.12	7.58
320.0	27.14	1.12	33.2	4.17	10.73
320.0	29.35	1.44	12.8	5.21	13.72
320.0	33.16	1.40	8.1	6.25	16.63
320.0	36.41	1.28	6.1	7.29	19.47
320.0	39.35	1.17	5.0	8.33	22.26
320.0	42.02	1.13	4.3	9.38	24.98
320.0	44.45	1.10	3.8	10.42	27.68
320.0	46.81	1.07	3.4	11.46	30.40
320.0	49.00	1.03	3.1	12.50	32.98

H.B. FLEMING
Enter Project Title Here

05-Oct-2017
GRLWEAP (TM) Version 2005

APE D19 Constant Capacity

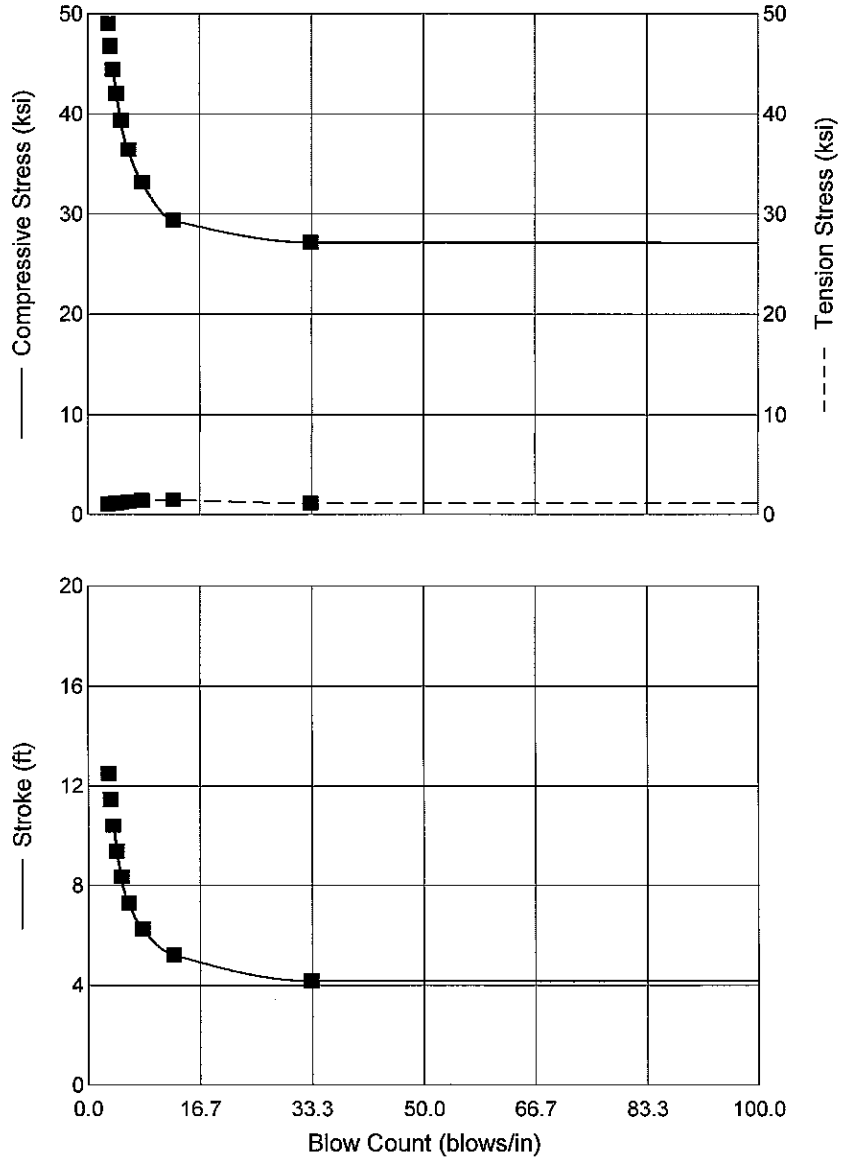

APE D 19-42

Capacity	320.0	kips
Efficiency	0.800	
Helmet	1.20	kips
Hammer Cushion	40399	kips/in
Skin Quake	0.100	in
Toe Quake	0.040	in
Skin Damping	0.148	sec/ft
Toe Damping	0.150	sec/ft
Pile Length	60.00	ft
Pile Penetration	60.00	ft
Pile Top Area	12.40	in2

Pile Model

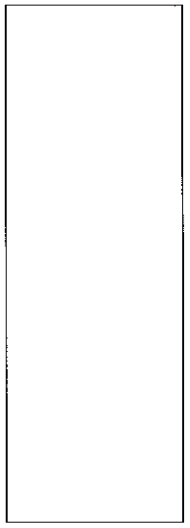

Skin Friction Distribution

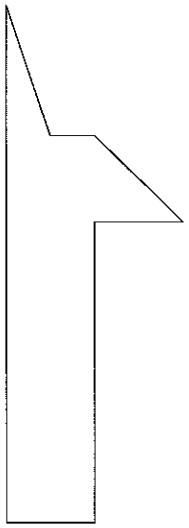

Res. Shaft = 25 %
(Proportional)

Date: 10/27/17

Reviewed for Code Compliance
Inspections Division
Approved with Conditions

CITY OF PORTLAND, MAINE

MKT DE42 Constant Capacity

Reviewed for Code Compliance
Inspections Division
Approved with Conditions
Date: 10/27/17

H.B. FLEMING
Enter Project Title Here

05-Oct
GRLWEAP (TM) Version

Ultimate Capacity kips	Maximum Compression Stress ksi	Maximum Tension Stress ksi	Blow Count blows/in	Stroke ft	Energy kips-ft
320.0	21.96	1.04	9999.0	3.38	6.20
320.0	25.86	1.31	60.0	4.50	9.46
320.0	30.62	1.40	16.4	5.62	12.61
320.0	34.42	1.39	9.7	6.75	15.72
320.0	37.67	1.36	7.1	7.88	18.69
320.0	40.56	0.65	5.6	9.00	21.68
320.0	43.26	0.00	4.7	10.12	24.57
320.0	45.66	0.00	4.1	11.25	27.43
320.0	48.02	0.00	3.7	12.38	30.24
320.0	50.21	0.26	3.2	13.50	32.95

H.B. FLEMING
Enter Project Title Here

05-Oct-2017
GRLWEAP (TM) Version 2005

MKT DE42 Constant Capacity

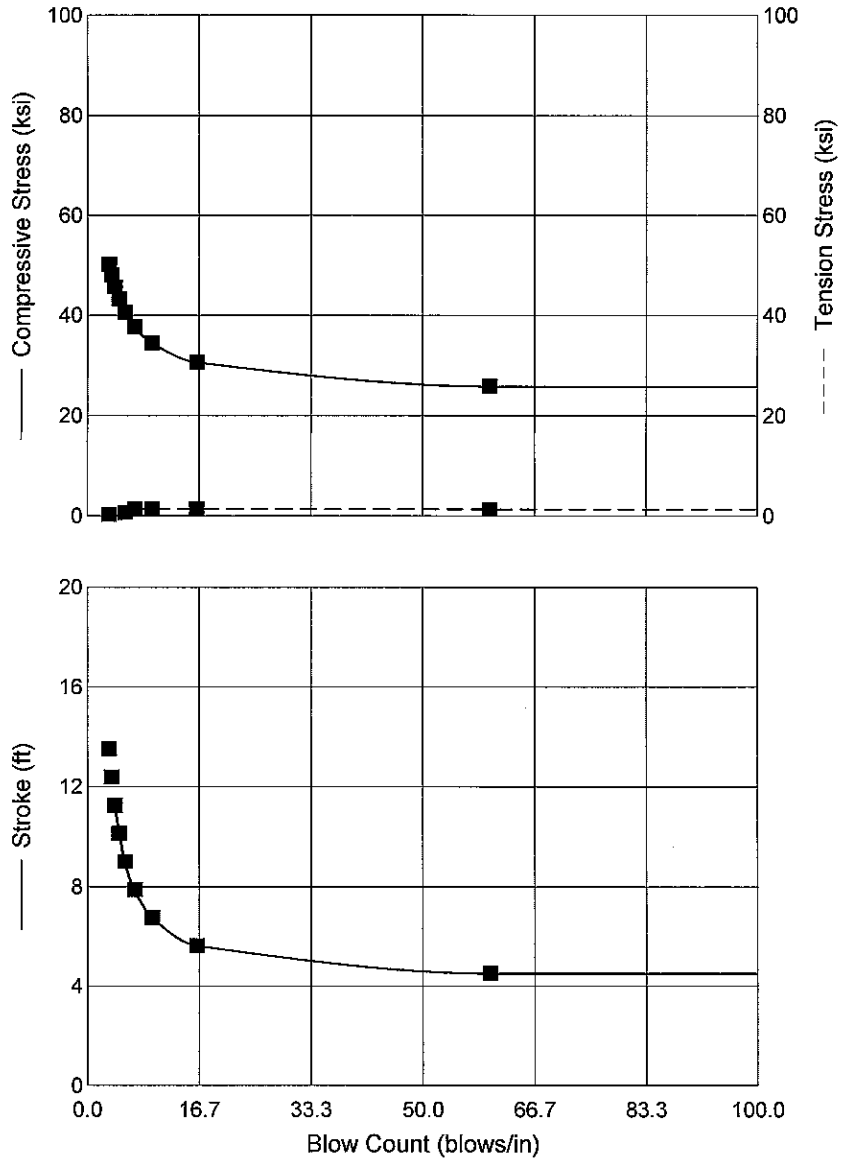

MKT DE 42/35

Capacity	320.0	kips
Efficiency	0.800	
Helmet	1.20	kips
Hammer Cushion	40399	kips/in
Skin Quake	0.100	in
Toe Quake	0.040	in
Skin Damping	0.148	sec/ft
Toe Damping	0.150	sec/ft
Pile Length	60.00	ft
Pile Penetration	60.00	ft
Pile Top Area	12.40	in2

Pile Model

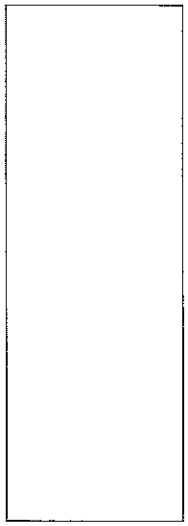

Skin Friction Distribution

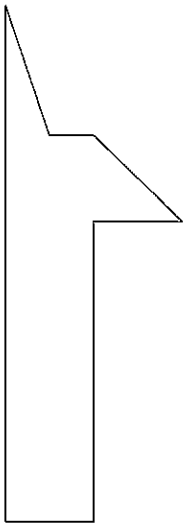

Res. Shaft = 25 %
(Proportional)

Date: 10/27/17

Reviewed for Code Compliance
Inspections Division
Approved with Conditions

CITY OF PORTLAND, MAINE

Reviewed for Code Compliance
Inspections Division
Approved with Conditions
Date: 10/27/17

HARD-BITE™ – HP-77600-B

Dimensions

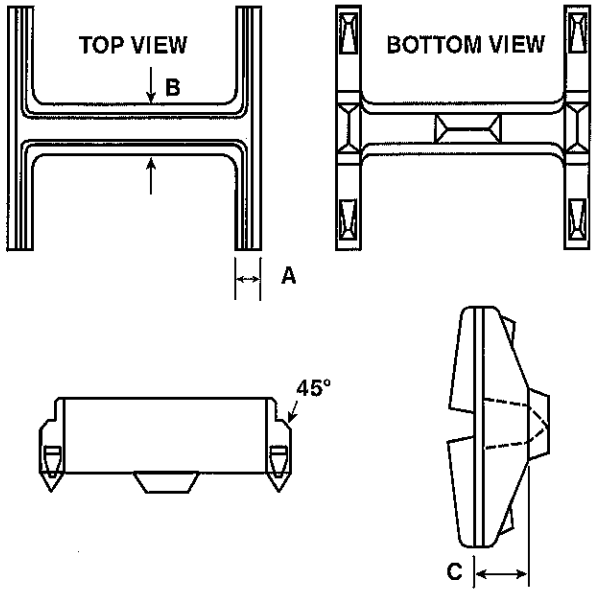

MATERIAL: CAST STEEL

ASTM A148 90/60

	8"	10"	14"
A	1-1/16"	1"	1"
B	1"	1"	1-1/4"
C	1-7/8"	2-1/16"	2-3/4"
Wt.	12#	23#	31#

Installation Instructions

1. Fit point onto the end of the square cut pile end.
2. Weld point to the pile in either flat or vertical position using E7018 electrodes.
3. Weld across full width of flange following chart below for minimum size weld.

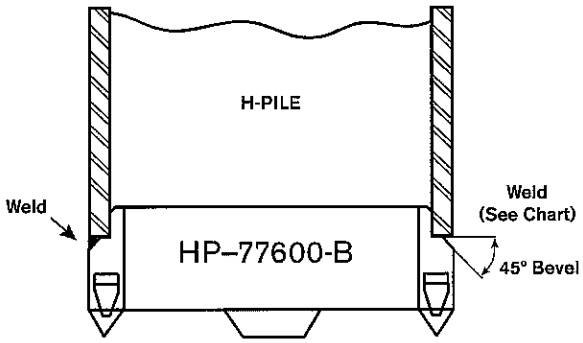

Pile Size	Flange Thickness	Groove Weld
HP 14 x 117	.805	7/16
x 102	.705	3/8
x 89	.615	3/8
x 73	.505	5/16
HP 10 x 57	.565	5/16
x 42	.420	5/16
HP 8 x 36	.445	5/16

ASSOCIATED PILE & FITTING

PO Box 5933 Parsippany, NJ 07054-5933
Tel: 973-773-8400
Fax: 973-428-5146
email: apf@associatedpile.com
www.associatedpile.com
Call Toll Free: 800-526-9047

(12/11)

Reviewed for Code Compliance
Inspections Division
Approved with Conditions
Date: 10/27/17

HARD-BITE™ – HP-77750-B

Dimensions

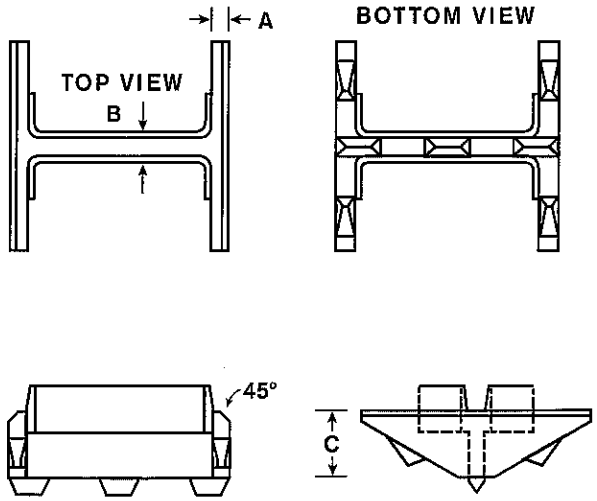

MATERIAL: CAST STEEL

ASTM A148 90/60

	10"	12"	14"
A	3/4"	3/4"	1"
B	1-3/8"	1-1/2"	1-5/8"
C	3"	3-1/2"	4"
Wt.	19#	25#	42#

Installation Instructions

1. Fit point onto the end of the square cut pile end.
2. Weld point to the pile in either flat or vertical position using E7018 electrodes.
3. Weld across full width of flange following chart below for minimum size weld.

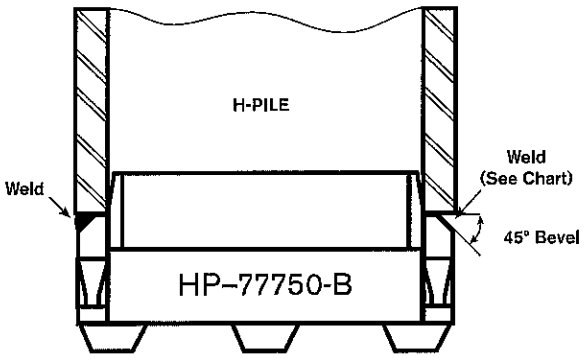

Pile Size	Flange Thickness	Groove Weld
HP 14 x 117	.805	7/16
x 102	.705	3/8
x 89	.615	3/8
x 73	.505	5/16
HP 12 x 84	.685	3/8
x 74	.610	3/8
x 63	.515	5/16
x 53	.435	5/16
HP 10 x 57	.565	5/16
x 42	.420	5/16

ASSOCIATED PILE & FITTING

PO Box 5933 Parsippany, NJ 07054-5933
Tel: 973-773-8400
Fax: 973-428-5146
email: apf@associatedpile.com
www.associatedpile.com
Call Toll Free: 800-526-9047

(12/11)

SUPER BITE POINT – Series PAR-T

Reviewed for Code Compliance
Inspections Division
Approved with Conditions
Date: 10/27/17

Dimensions

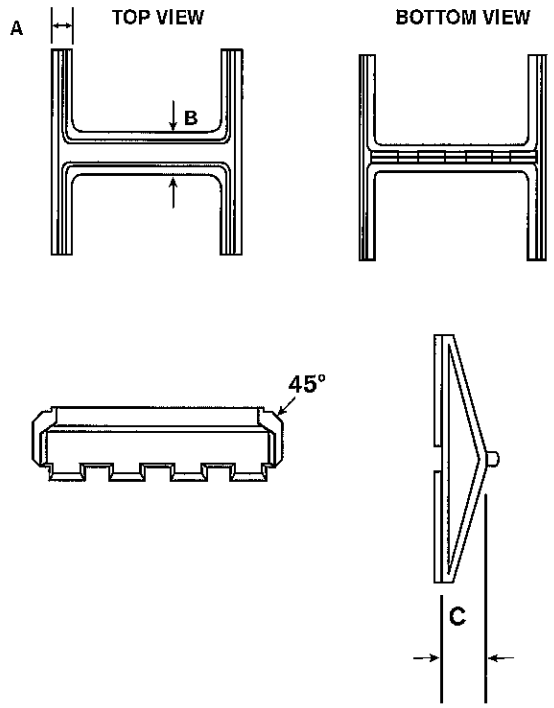

ASTM A148 90/60 - Heat Treated

	10"	12"	14"
A	1"	1-1/4"	1-1/4"
B	1-1/4"	1-7/16"	1-3/4"
C	2-9/16"	2-5/8"	2-15/16
WT	14	23	30

NORMAL FOUNDRY TOLERANCES APPLY

Installation Instructions

Super Bite Point Series PAR-T

1. Fit point onto the end of the square cut pile end.
2. Weld point to the pile in either flat or vertical position using E7018 electrodes.
3. Weld across full width of flange following chart below for minimum size weld.

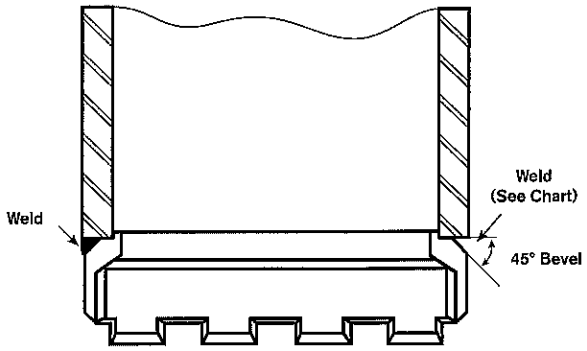

Pile Size	Flange Thickness	Min. Size Groove Weld
HP 14 x 117	.805	7/16
x 102	.705	3/8
x 89	.615	3/8
x 73	.505	5/16
HP 12 x 84	.685	3/8
x 74	.610	3/8
x 63	.515	5/16
x 53	.435	5/16
HP 10 x 57	.565	5/16
x 42	.420	5/16

ASSOCIATED PILE & FITTING

PO Box 5933 Parsippany, NJ 07054-5933
Tel: 973-773-8400
Fax: 973-428-5146
email: apf@associatedpile.com
www.associatedpile.com
Call Toll Free: 800-526-9047

(12/11)

CITY OF PORTLAND, MAINE
RESURGAM
Reviewed for Code Compliance
Inspections Division
Approved with Conditions
Date: 10/27/17

JOINT WELDING PROCEDURE SPECIFICATION

Material specification: ASTM A572 Gr 50
Welding process: SMAW
Manual or machine: MANUAL
Position of welding: HORIZONTAL
Filler metal specification: AWS A5.1
Filler metal classification: E7018
Flux: N/A
Shielding gas: N/A Flow rate: N/A
Single or multiple pass: MULTIPLE
Single or multiple arc: SINGLE
Welding current: DC
Polarity: REVERSE
Welding progression: N/A
Root treatment: GRIND & BACK TO SOUNDNESS AND GRIND ACCESS HOLES FOR WELD ACCESS; BACKGOUGE/GRIND AS REQ'D.
Preheat and interpass temperature: PER AWS D1.1
Postheat treatment: NONE

WELDING PROCEDURE

Pass. no.	Electrode size	Welding current: Amperes	Welding current: Volts	Travel speed	Joint detail
1	1/8"	120-150	12-24	1 in/min	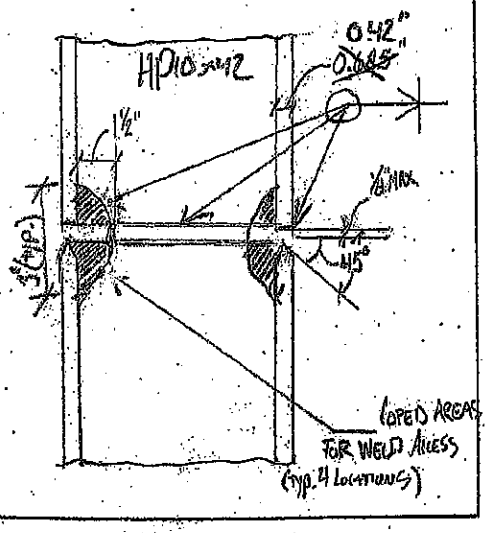
2+	1/8" or 5/32"	120-150 140-180	12-24 12-24	1 in/min 1 in/min	

This procedure may vary due to fabrication sequence, fit-up, pass size, etc., within the limitation of variables given in Section 5.

Procedure no. PLUG - FULL PENETRATION BUTT WELD - SMAW
Contractor: H.B. Fleming
Revision no.:
Authorized by:
Form E-2
Date: 5/13/16

Form E-2 — Welding Procedure Specification

CITY OF PORTLAND, MAINE — RESURGAM
Reviewed for Code Compliance
Inspections Division
Approved with Conditions
Date: 10/27/17

JOINT WELDING PROCEDURE SPECIFICATION

Material specification: ASTM A572 Gr. 50
Welding process: FCAW
Manual or machine: MANUAL
Position of welding: HORIZONTAL
Filler metal specification: AB 20
Filler metal classification: E71T-8
Flux: N/A
Shielding gas: N/A Flow rate: N/A
Single or multiple pass: MULTIPLE
Single or multiple arc: SINGLE
Welding current: DC
Polarity: REVERSE
Welding progression: N/A
Root treatment: GRIND & BEVEL TO PROFILE
Preheat and interpass temperature: PER AWS D1.1
Postheat treatment: NONE

WELDING PROCEDURE

Pass no.	Electrode size	Welding current: Amperes	Welding current: Volts	Travel speed	Joint detail
1	1/16"	220	17-19	10 in/min	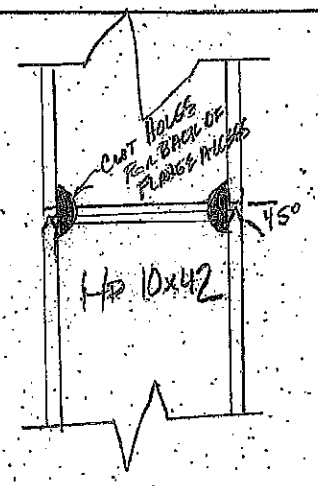
2+	1/16"	220	17-19	10 in/min	

This procedure may vary due to fabrication sequence, fit-up, pass size, etc., within the limitation of variables given in Section 5.

Procedure no. FCAW-H-PILE Contractor H.B. FRANKS, INC.
Revision no. 0 Authorized by [signature]
Form E-2 Date 11/19/15