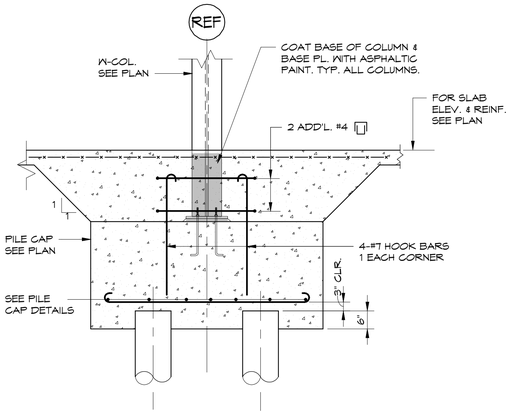

1 SECTION AT INTERIOR COLUMN DETAIL
1/2" = 1'-0"

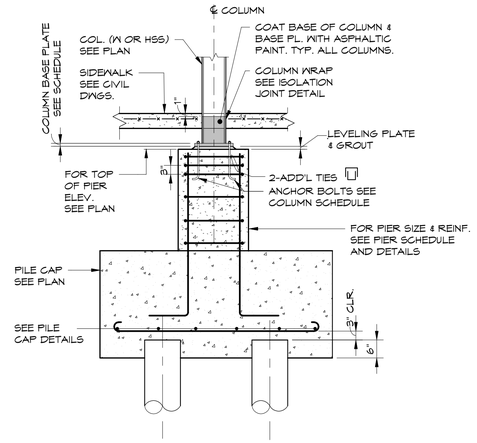

2 COLUMN W/ PIER DETAIL
1/2" = 1'-0"

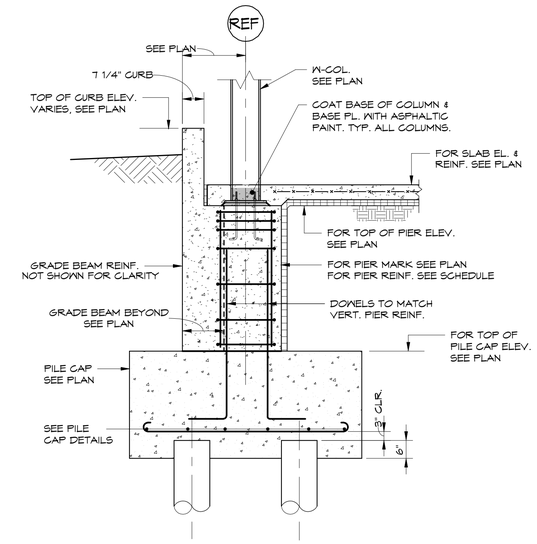

3 TYPICAL SECTION AT EXT. COLUMN DETAIL
1/2" = 1'-0"

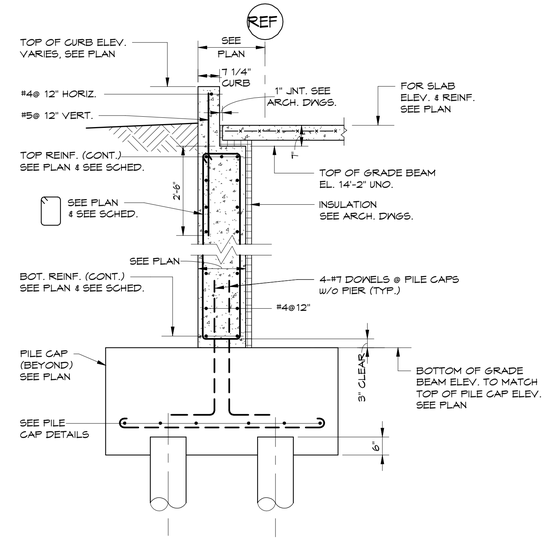

4 TYPICAL SECTION AT EXT. GRADE BEAM DETAIL
1/2" = 1'-0"

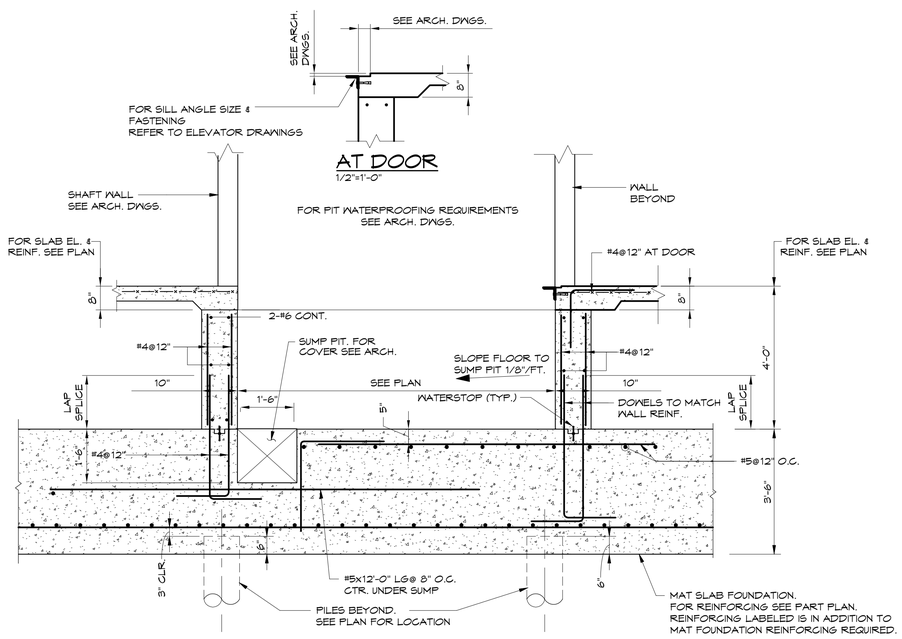

5 SECTION AT ELEVATOR
1/2" = 1'-0"

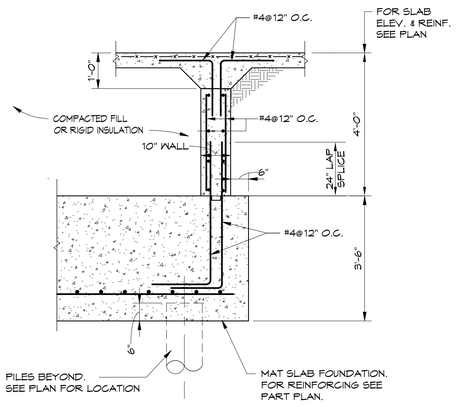

6 SECTION AT MAT SLAB FOUNDATION
1/2" = 1'-0"

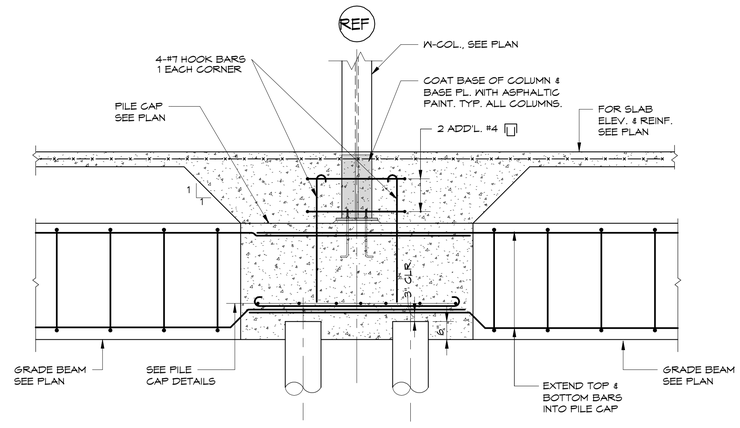

7 SECTION AT INTERIOR COLUMN W/ GRADE BEAM DETAIL
1/2" = 1'-0"

STATE OF MAINE
RIMANTAS M. VEITAS
No. 9477
LICENSED PROFESSIONAL ENGINEER
Date: 10/27/17

Prepared For:
0 Hancock Street LLC

Consulting Engineer:
VEITAS pllc VEITAS engineers
501 Granite Street Suite 101
Braintree, Massachusetts 02184
TEL: 781-842-2800 FAX: 781-849-2005

Architect:
ARCHETYPE architects
48 Union Wharf Portland, Maine 04101
(207) 772-6022 Fax (207) 772-4056

Project:
0 HANCOCK STREET
0 HANCOCK STREET
PORTLAND, MAINE

Revisions:
08-11-17 Issued for Foundation Permit
08-31-17 Permit Set
09-15-17 Steel Bid Set
09-22-17 Pile Bid Set
09-29-17 Concrete Bid Set
10-06-17 Issued for Permit

Scale:

Date: 08/11/17

Foundation Sections & Details

S401