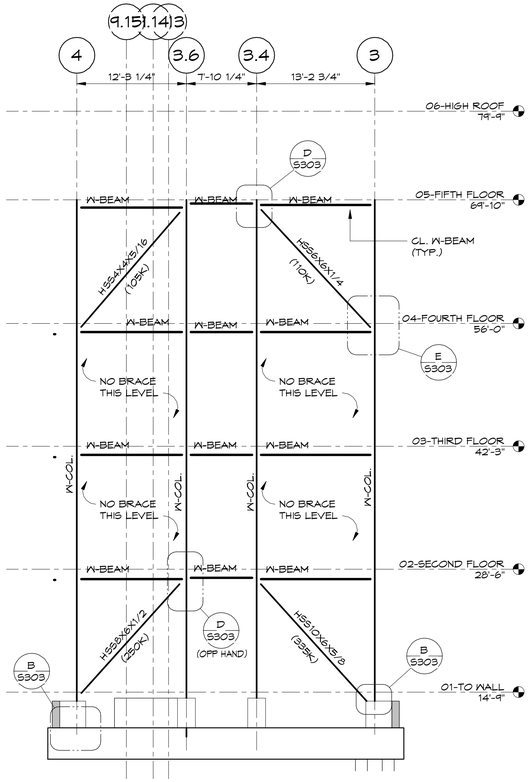

1 BRACE "A"
1/8" = 1'-0"

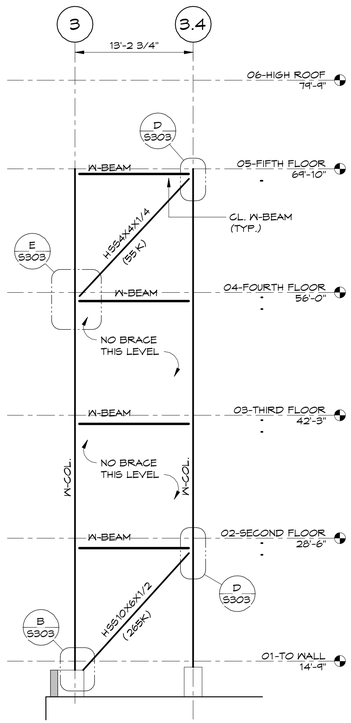

2 BRACE "B"
1/8" = 1'-0"

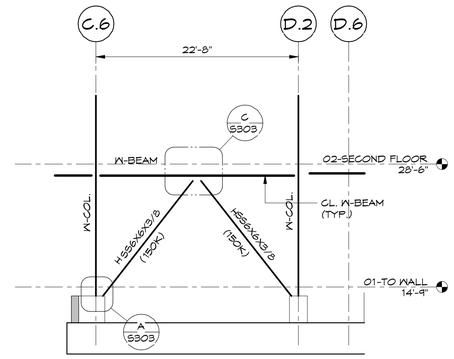

3 BRACE "C"
1/8" = 1'-0"

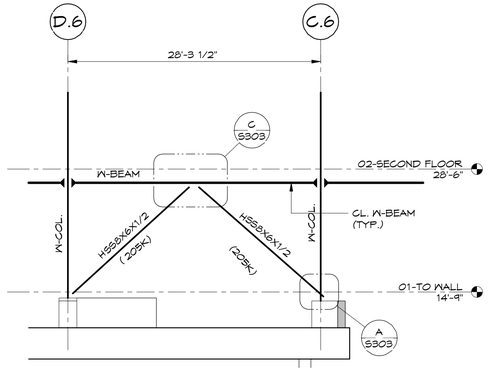

4 BRACE "D"
1/8" = 1'-0"

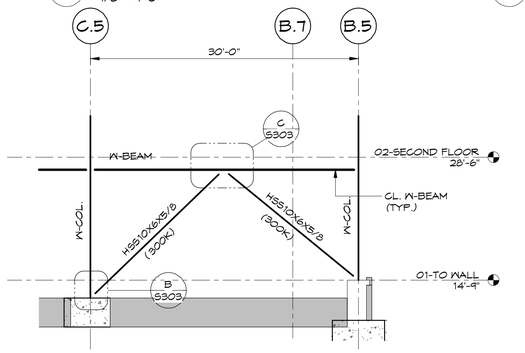

5 BRACE "E"
1/8" = 1'-0"

NOTE

(105K) ETC. INDICATES FACTORED (LRFD) AXIAL FORCE IN THE BRACE MEMBERS FOR THE USE IN CONNECTION DESIGN. TO CHANGE LRFD LOAD TO ASD DIVIDE LRFD BY 1.5 (LRFD/1.5=ASD)

BRACE DETAIL NOTES:

1. FOR NUMBER, SIZE AND LENGTHS OF ANCHOR BOLTS SEE BASE PLATE DETAILS
2. ALL BRACE GUSSET PLATES TO BE 1/2" THICK MIN.
3. DETAILER TO PROVIDE SIZE AND LENGTH OF FIELD FILLET WELDS OF HSS BRACE TO PLATES ON THE ERECTION DRAWINGS.
4. SHEAR CAPACITY OF CONNECTION TO BE BRACING LOAD PLUS BEAM SHEAR INDICATED ON PLANS.
5. DETAILER TO REVIEW INSTALLATION OF BRACE MEMBER. SUBMIT DIAGRAM INDICATING HOW BRACE WILL FIT.

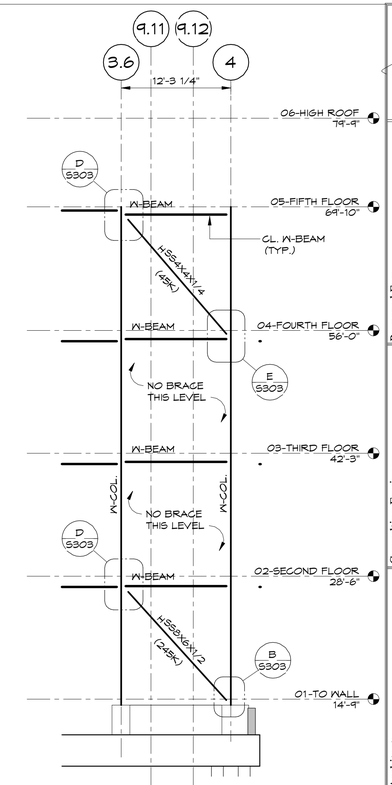

6 BRACE "F"
1/8" = 1'-0"

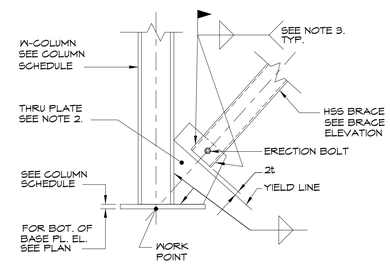

A DETAIL
3/4" = 1'-0"

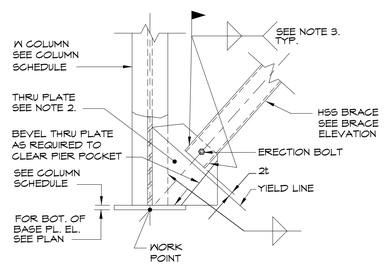

NOTE:
PROVIDE PARTIAL PENETRATION WELDS AT WEB TO PLATE CONNECTIONS

B DETAIL
3/4" = 1'-0"

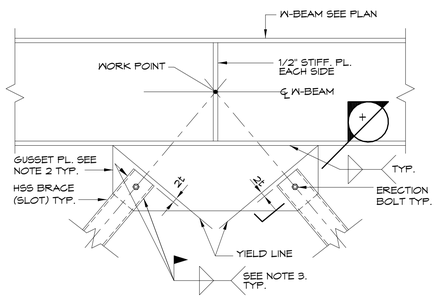

C DETAIL
3/4" = 1'-0"

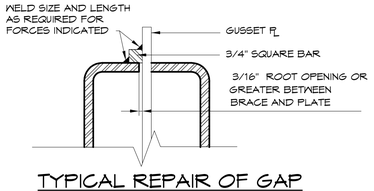

TYPICAL REPAIR OF GAP BETWEEN WELDING SURFACES

NOTE:
IF ROOT OPENING IS 1/16" TO 3/16", INCREASE REQUIRED WELD SIZE BY THE OPENING SIZE.

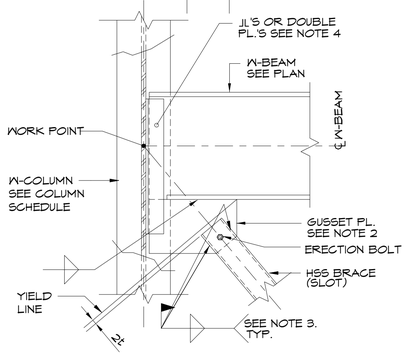

D DETAIL
3/4" = 1'-0"

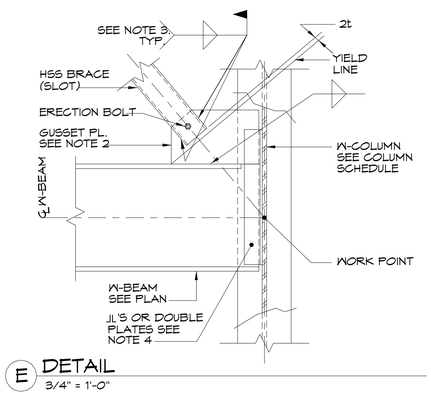

E DETAIL
3/4" = 1'-0"

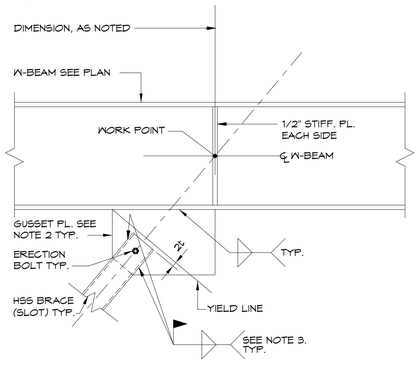

F DETAIL
3/4" = 1'-0"

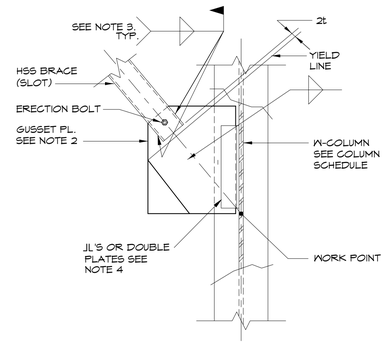

G DETAIL
3/4" = 1'-0"

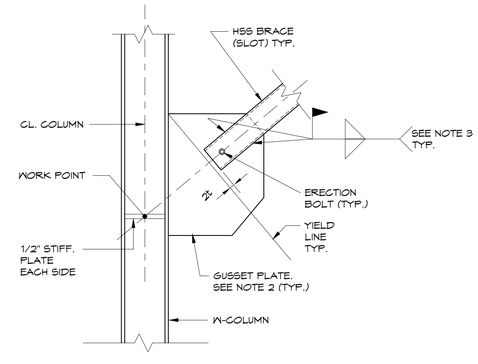

H DETAIL
3/4" = 1'-0"

STATE OF MAINE
RIMANTAS M. VEITAS
No. 9477
LICENSED PROFESSIONAL ENGINEER
Date: 10/27/17

Prepared For: 0 Hancock Street LLC

Consulting Engineer: VEITAS pue VEITAS engineers
901 Granite Street, Suite 101
Braintree, Massachusetts 02184
TEL: 781-842-2800 FAX: 781-849-2005

Architect: ARCHETYPE architects
48 Union Wharf Portland, Maine 04101
(207) 772-6022 Fax (207) 772-4056

Project: 0 HANCOCK STREET
0 HANCOCK STREET PORTLAND, MAINE

Revisions:
08-11-17 Issued for Foundation Permit
08-31-17 Permit Set
09-15-17 Steel Bid Set
09-22-17 Pile Bid Set
09-29-17 Concrete Bid Set
10-06-17 Issued for Permit

Scale:
Date: 08/11/17

Brace Frames & Details

S303