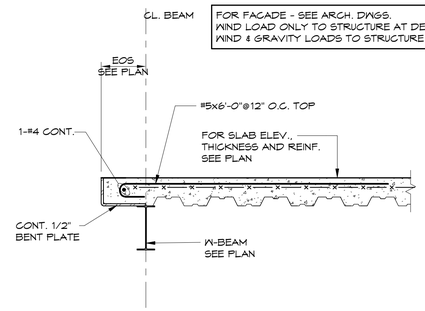

1A SECTION
3/4" = 1'-0"

1 SECTION
3/4" = 1'-0"

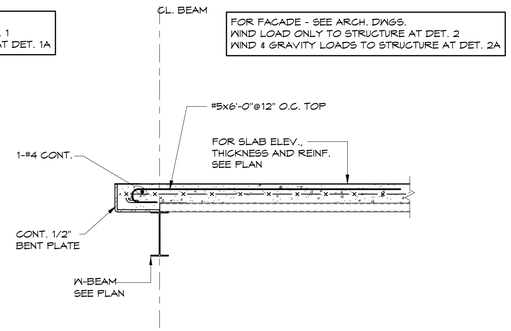

2A SECTION
3/4" = 1'-0"

2 SECTION
3/4" = 1'-0"

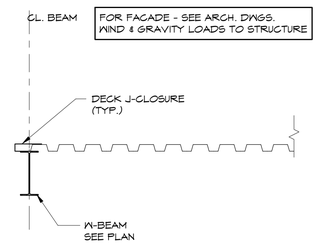

FOR ADDITIONAL INFORMATION, SEE DETAIL A ON S205

3 SECTION AT ROOF
3/4" = 1'-0"

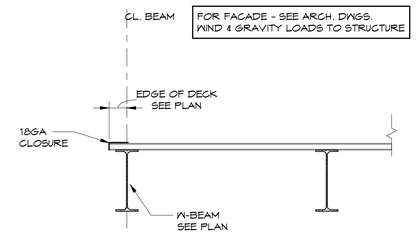

FOR ADDITIONAL INFORMATION, SEE DETAIL A ON S205

4 SECTION AT ROOF
3/4" = 1'-0"

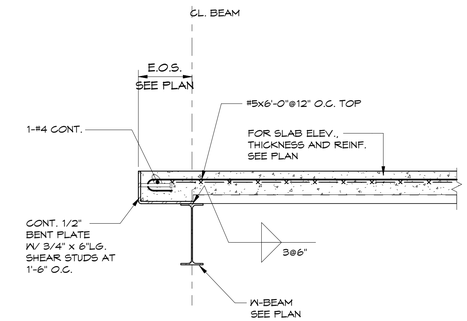

5 SECTION
3/4" = 1'-0"

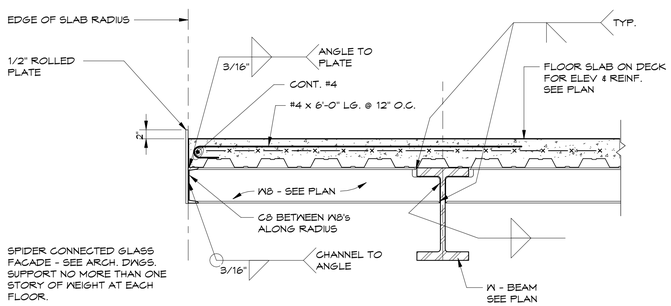

6 SECTION AT RADIUS FLOOR
3/4" = 1'-0"

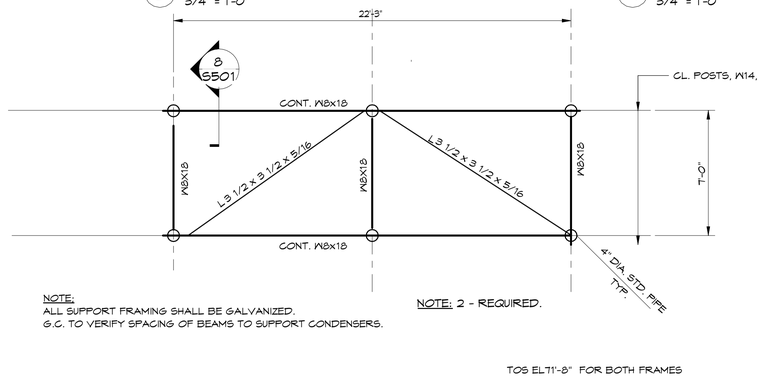

PLAN OF ROOF
DUNNAGE SUPPORT FRAME
7
1/4" = 1'-0"

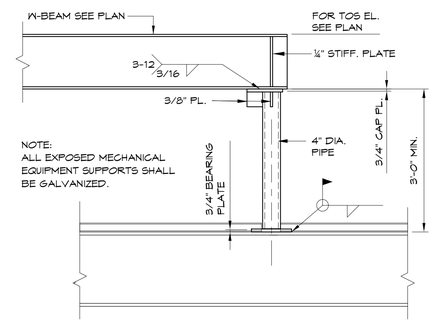

8 MECHANICAL EQUIPMENT SUPPORT POST
1" = 1'-0"

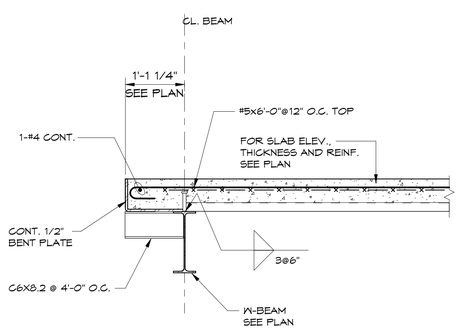

9 SECTION AT EDGE OF SLAB
3/4" = 1'-0"

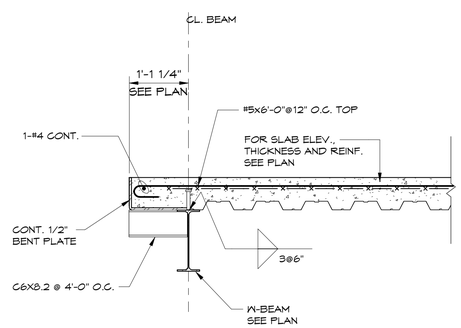

10 SECTION AT EDGE OF SLAB
3/4" = 1'-0"

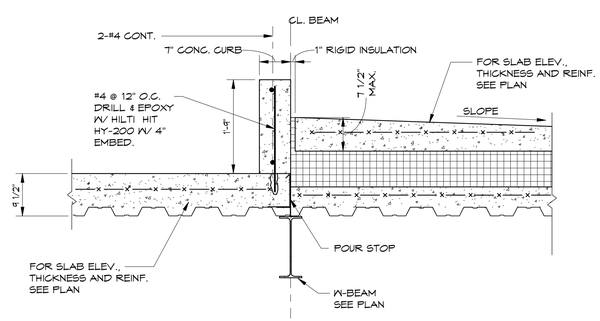

11 SECTION AT PENTHOUSE CURB
3/4" = 1'-0"

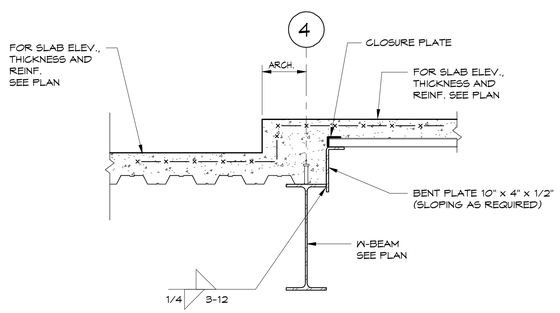

12 SECTION AT FOURTH FLOOR
3/4" = 1'-0"

STATE OF MAINE
RIMANTAS M. VEITAS
No. 9477
LICENSED PROFESSIONAL ENGINEER

Reviewed for Code Compliance
Inspection Division
Portland, Maine

Date: 10/27/17

Prepared For:
0 Hancock Street LLC

Consulting Engineer:
VEITAS pllc VEITAS engineers
90 Grande Street Suite 101
Braintree, Massachusetts 02184
TEL: 781-842-2865 FAX: 781-849-2065

Architect:
ARCHETYPE architects
48 Union Wharf Portland, Maine 04101
(207) 772-6022 Fax (207) 772-4056

Project:
0 HANCOCK STREET
0 HANCOCK STREET
PORTLAND, MAINE

Revisions:
08-11-17 Issued for Foundation Permit
08-31-17 Permit Set
09-15-17 Steel Bid Set
09-22-17 Pile Bid Set
09-29-17 Concrete Bid Set
10-06-17 Issued for Permit

Scale:

Date: 08/11/17

Steel Sections & Details

S501