THIS DOCUMENT IS THE PROPERTY OF FABCO INDUSTRIES AND IS CONVEYED WITH THE EXPRESS CONDITION THAT IT AND THE INFORMATION CONTAINED IN IT ARE NOT TO BE USED, DISCLOSED, OR REPRODUCED IN WHOLE OR IN PART, FOR ANY PURPOSE WITHOUT THE EXPRESS WRITTEN CONSENT OF FABCO INDUSTRIES, AND THAT NO RIGHT IS GRANTED TO DISCLOSE OR SO USE ANY INFORMATION CONTAINED IN SAID DOCUMENT.

NOTES:

1. WEIGHT (APPROX):
   A) EMPTY W/CARTRIDGES: 50-LB (MAX)
   B) FULL OF WATER: 1800-LB (MAX)

2. MATERIAL:
   A) FILTER HOUSING AND COVER: HDPE, WHITE
   B) CARTRIDGE PLATE: 5052-H32 ALUMINUM ALLOY
   C) SUPPORT HARDWARE: CRES 300 SERIES OR EQUAL

3. PERFORMANCE CHARACTERISTICS (TYP):
   A) DEBRIS CAPACITY: 11.0 CU-FT
   B) FILTERED FLOW RATE: SEE TABLE 1
   C) BYPASS FLOW RATE: 3100 GPM (6.9 CFS)

4. TYPICAL INSTALLATION: CUT DOWNSPOUT PIPE AND CONNECT THE 4" INLET AND OUTLET PIPES AS REQUIRED TO REDIRECT RAIN FLOW THROUGH THE FILTER BOX.

5. USE ONLY WITH FABCO REPLACEABLE MEDIA CARTRIDGES.

6. ALL TANK DIMENSIONS ARE REFERENCE AND VARY BY THE STANDARD ROTATIONAL MOLDING TOLERANCE OF ± 3%

TABLE 1 (3)(4)

ADDITIONAL CARTRIDGE DESIGNS

ORDER NUMBER	DESCRIPTION	COLOR CODE	FLOW RATE (TYP)
9718-1	STANDARD	RED	115 GPM (.26 CFS)
9718-2	BACTERIA	YELLOW	115 GPM (.26 CFS)
9718-3	HYDROCARBONS	BLUE	115 GPM (.26 CFS)
9718-4	HEAVY METALS	GREY	60 GPM (.13 CFS)
9718-5	STANDARD (SHORT)	MINT	115 GPM (.26 CFS)
9718-6	NUTRIENTS	GREEN	100 GPM (.22 CFS)
9718-7	HIGH FLOW	RED (MARKED)	260 GPM (.58 CFS)

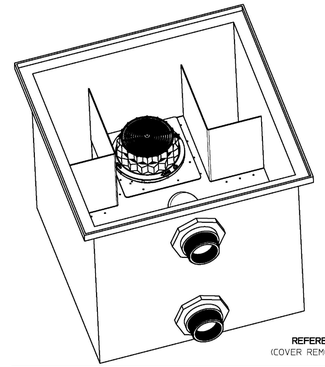

REFERENCE VIEW
(COVER REMOVED FOR CLARITY)

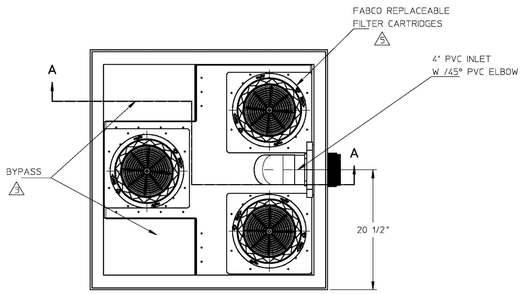

COVER REMOVED FOR CLARITY

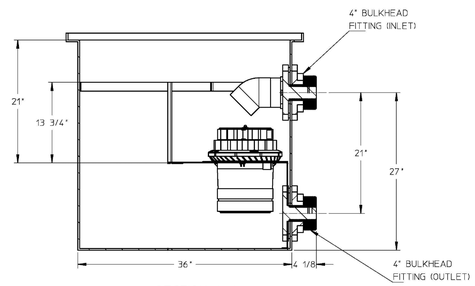

SECTION A-A

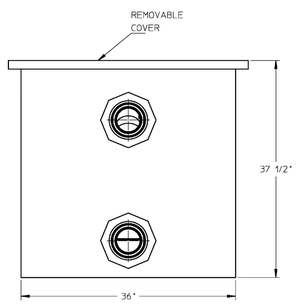

(A) FABCO DOWNSPOUT FILTER UNIT DETAIL

N.T.S.

DESIGN NOTES:
1. CONCRETE 5000 PSI AT 28 DAYS.
2. H-20 LOADING
3. JOINTS SEALED WITH BUTYL RUBBER JOINT SEALANT (ASSHTO M-19)
4. ALL TEES/BAFFLES PROVIDED BY PRECAST.

THIS STRUCTURE MUST DISCHARGE TO A CITY OF PORTLAND STANDARD MANHOLE WITH CHANNEL (CONTROL/SAMPLING MANHOLE).

FORMULA FOR SIZING THE TRAP: CHAMBER "A" (2/3 OF TANK VOLUME) MUST BE EQUIVALENT TO THE AVERAGE DAILY PROCESS FLOW FROM THE FACILITY WITH NO SANITARY OR OTHER EXTRANEOUS WASTES FLOWING THROUGH IT.

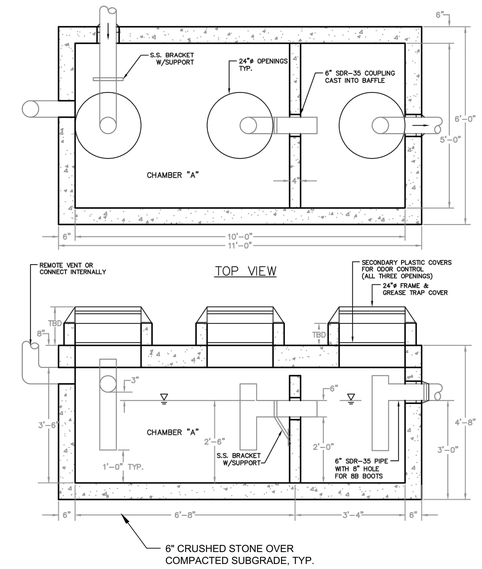

(C) GREASE TRAP

N.T.S.

AS OBTAINED FROM THE CITY OF PORTLAND "TECHNICAL MANUAL"

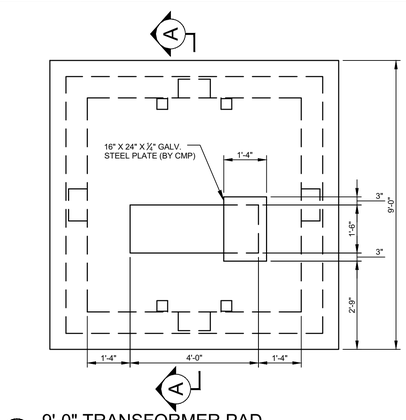

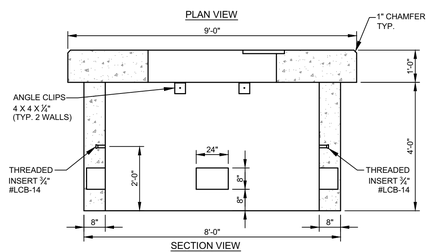

SECTION VIEW

NOTES:
1. CONCRETE MINIMUM COMPRESSIVE STRENGTH 4,000 PSI @ 28 DAYS WITH STEEL REINFORCEMENT.
2. AS PER CENTRAL MAINE POWER COMPANY SPECIFICATIONS.
3. ONE 8" x 24" KNOCKOUT PROVIDED EACH WALL.
4. FOR 750 - 5000 KVA THREE PHASE TRANSFORMER.
5. FINISH GRADE SHALL BE GRADED TO ALLOW SURFACE WATER TO FLOW AWAY FROM THE PAD.

(B) 9'-0" TRANSFORMER PAD

N.T.S.

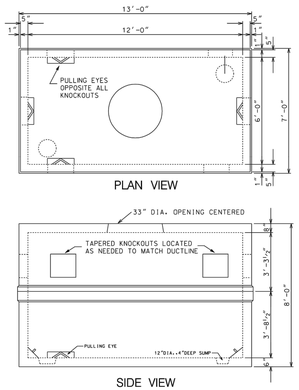

MANHOLE DETAIL
N.T.S.
(Ref.Types 38Y)

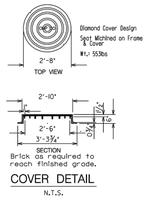

COVER DETAIL
N.T.S.

NOTES

1) Vault shall be designed to withstand H20 wheel loading with 6 inches of cover over the top. Design shall also comply with the minimum requirements of Portland Electrical Safety Code Section 323A. Provide shop drawings stamped by a State of Maine Registered Professional Engineer upon Request

2) Joints sealed with asphalt.

3) Mountings for cable racks etc. cast in wall by further plans or field located.

4) Manhole shall be set on a suitable gravel base.

5) Cables are to be racked along one wall only.

(D) CMP PRECAST CONCRETE 38Y MANHOLE

N.T.S.

Stantec
482 Payne Road Scarborough Court
Scarborough, Maine 04074-8929
Tel. 207.883.3355
www.stantec.com

Copyright Reserved
The Contractor shall verify and be responsible for all dimensions. DO NOT scale the drawing - any errors or omissions shall be reported to Stantec without delay.
The Copyrights to all designs and drawings are the property of Stantec. Reproduction or use for any purpose other than that authorized by Stantec is forbidden.

Consultants
ARCHITECT
ARCHETYPE
LANDSCAPE ARCHITECT
MOHR & SEREDIN
SURVEYOR
OWEN HASKELL
CONTRACTOR
CIANBRO

Notes

Revision	By	Appd.	YY.MM.DD
4 ISSUED FOR CONSTRUCTION FINAL PLANS	SRB	SRB	17.10.20
3 REVISED PER CONDITIONS OF APPROVAL RELEASED FOR BIDDING	SRB	SRB	17.10.10
2 RESUBMITTED FOR FINAL SITE PLAN REVIEW PRIOR TO OCT. 4, 2017 PUBLIC HEARING	SRB	SRB	17.09.26
1 FINAL SITE PLAN REVIEW	SRB	SRB	17.08.08

File Name: 195350450_det	LA	DBS	SRB	17.07.12
P.E. STEPHEN R. BUSHEY	DWN.	CHKD.	DSGN.	DATE

Permit-Seal

Client/Project
0 HANCOCK STREET LLC

THAMES STREET SITE
PORTLAND, MAINE

Title
MISCELLANEOUS UTILITY DETAILS

Project No. 195350450
Scale N.T.S.

Sheet
C-6.3

Reviewed for Code Compliance Inspections Division Date: 10/27/17

V:\195\active\195350450\civil\cad\fpermit\dwg\195350450_det.dwg pfiletitle: 10/20/2017 3:08 PM