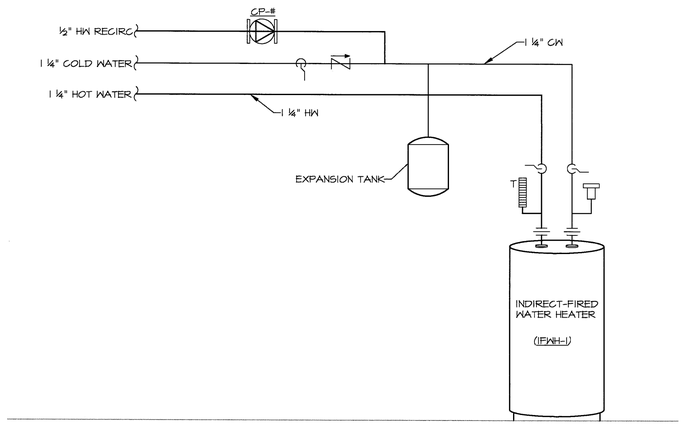

DOMESTIC HOT WATER PIPING DETAIL

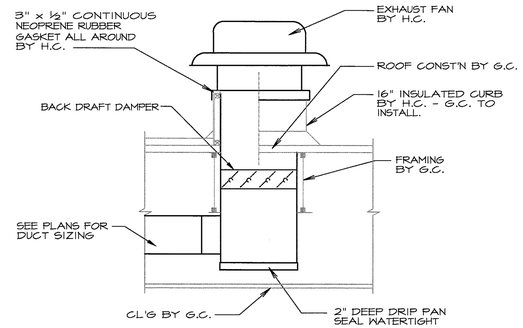

ROOF EXHAUST FAN

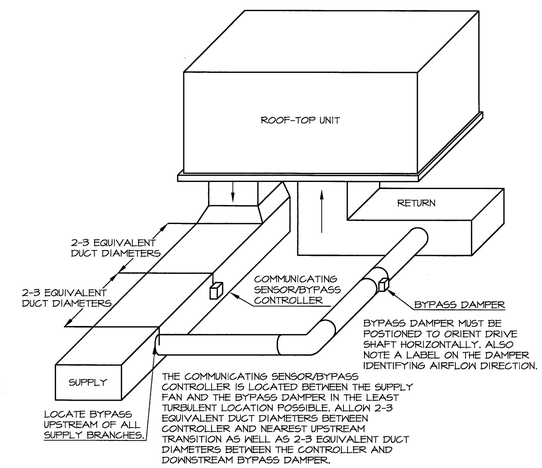

COMMUNICATING SENSOR/BYPASS CONTROL & BYPASS DAMPER INSTALLATION DETAIL

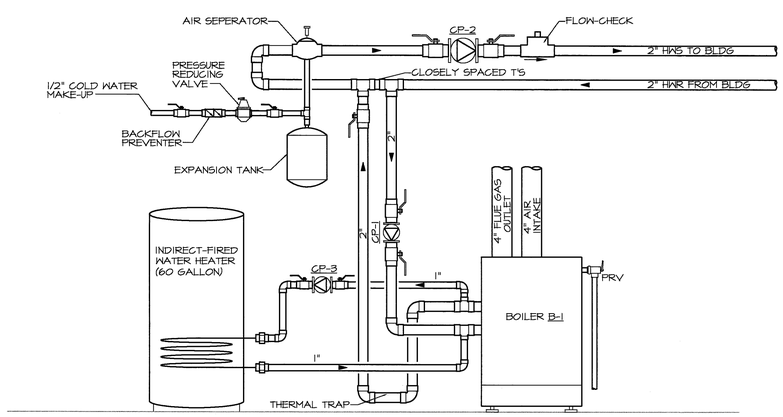

BOILER PIPING SCHEMATIC

SCALE: NONE

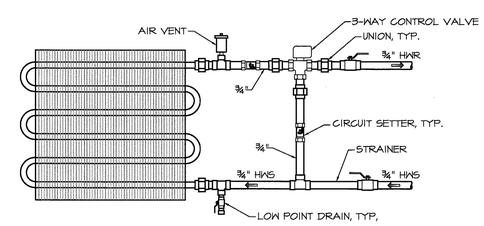

VAV HW COIL PIPING DETAIL (VV-146 & VV-143)

SCALE: NONE

This document is owned by and the information contained in it is proprietary to Titan Mechanical Inc. By receipt hereof the holder agrees not to use the information, disclose it to any third party, nor reproduce it in whole or in part, nor permit a copy of Titan Mechanical Inc. and agrees to return the document forthwith upon request.

REVISIONS	DATE

Titan Mechanical, Inc.
Design Build Engineering - Mechanical Contracting
P.O. Box 3927 / 232 Riverside Industrial Parkway
Portland, Maine 04104
Ph. (207) 878-5223 Fax. (207) 878-5235

STATE OF MAINE
JOHN P. NOLAN JR.
No. 8680
LICENSED
PROFESSIONAL ENGINEER

CLIENT: DEPARTMENT OF VETERAN AFFAIRS

PROJECT: PORTLAND OFFICES

DRAWING TITLE: MECHANICAL DETAILS

DATE: 9/1/10

SCALE: 1/8" = 1'-0"

DRAWN BY: CJM

CHECKED BY: JPN

M400