LIFEBREATH
WWW.LIFEBREATH.COM

RESURGAM. CITY OF PORTLAND, MAINE

Reviewed for Code Compliance
Inspections Division
Approved with Conditions

Date: 12/14/15

ENGINEERING DATA

THERMALLY CONDUCTIVE, PATENTED ALUMINUM CORE
The counter-flow heat recovery core transfers heat between the two airstreams. It is easily removed for cleaning or service.

MOTORS AND BLOWERS
Each airstream has one centrifugal blower driven by a common PSC motor, with multiple fanspeed operations.

FILTERS
Washable air filters in exhaust and supply airstreams.

MOUNTING THE HRV
Threaded inserts at corners of the cabinet designed to accept the "S" hooks and hanging straps supplied with the unit.

DEFROST
Recirculating damper defrost system.

CASE
20 gauge prepainted galvanized steel for superior corrosion resistance, insulated to prevent exterior condensation. Drain connections: Two 1/2 in (12 mm) OD. Balancing ports are located on unit.

ELECTRONICS
Control included with the unit can be wall mounted in a central location of the home. 3 wire 20 gauge (min.) 100 ft length (max.).

CONTROLS
99-DXPL01 Lifestyle MAX Digital Control
- 5 speed operation on each mode
- 4 user selectable operational modes: Continuous Ventilation, 20 ON/40 OFF, 20 ON/40 Recirculation, Continuous Recirculation
- Humidity control through dehumidistat
- Adjustable dehumidistat function built into main wall control
- Built in relay for interfacing to furnace

OPTIONAL CONTROLS
99-LS01 **Lifestyle MAX Programmable Control** - Contains all the features of the Lifestyle MAX Digital Control with 24/7 programmable ventilation, 3 wire connection.

OPTIONAL TIMERS
99-DET01 **Lifestyle 20/40/60 Minute Timer** - Initiates high speed ventilation for 20, 40, or 60 minutes, 3 wire connection.
99-20M01 **Lifestyle 20 Minute Timer** - Initiates high speed ventilation for 20 minutes, 3 wire connection.
99-101 **Mechanical Timer** - Initiates high speed ventilation for up to 60 minutes, 2 wire connection.

OPTIONAL ACCESSORIES
99-DH01 **Lifestyle Dehumidistat** - Initiates high speed ventilation when the indoor humidity level is above the set point. 3 wire connection.
99-163 **Duct Heater w/Electronic SCR Thermostat** - 1 kW, 6 in (152 mm).
99-186 **Weatherhoods** - Two 6 in (152 mm)

WEIGHT 71 lbs (32.3 kg) **SHIPPING WEIGHT** 73 lbs (33.2 kg)

Perfo
Net supply air flow in c

External Static Pres	
@ 0.1 in (25 Pa)	[illegible]
@ 0.2 in (50 Pa)	[illegible]
@ 0.3 in (75 Pa)	146 cfm (69 L/s)
@ 0.4 in (100 Pa)	132 cfm (62 L/s)
@ 0.5 in (125 Pa)	115 cfm (54 L/s)
@ 0.6 in (150 Pa)	92 cfm (43 L/s)
@ 0.7 in (175 Pa)	60 cfm (28 L/s)

Max. Temperature Recovery		86%
Sensible Effectiveness @ 59 cfm (28 L/s)	32°F (0°C)	84%
Sensible Efficiency @ 59 cfm (28 L/s)	32°F (0°C)	75%
Sensible Efficiency @ 64 cfm (51 L/s)	-13°F (-25°C)	72%
VAC @ 60Hz		115
Watts / Low speed		66
Watts / High speed		118
Amp rating		1.4

Sensible Efficiency: Thermal
Effectiveness: Based on temperature differential between the 2 airstreams
Efficiency: Takes into account all power inputs

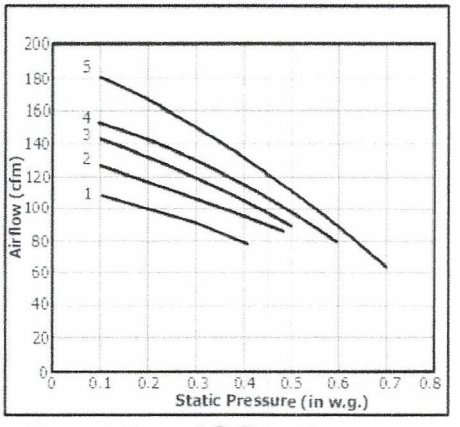

DIMENSIONS 155MAX

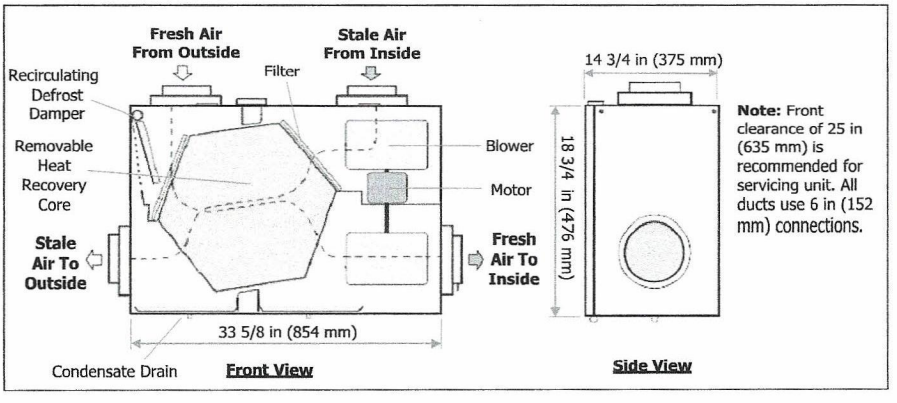

Note: Front clearance of 25 in (635 mm) is recommended for servicing unit. All ducts use 6 in (152 mm) connections.

WARRANTY
Units carry a lifetime warranty on the HRV core and a 5 year replacement parts warranty.

NOTE: All specifications are subject to change without notice.

All units conform to CSA and UL standards

ENERGY STAR

Date: _____ Contractor: _____

Tag: _____ Qty: _____ Supplier: _____

Project: _____ Quote #: _____

Engineer: _____ Submitted By: _____

CITY OF PORTLAND, MAINE · RESURGAM
Reviewed for Code Compliance
Inspections Division
Approved with Conditions
Date: 12/14/15

Installation

Location

Install the unit in a heated space that provides convenient space for service access. A typical location is in either a mechanical room or an area close to the outside wall within close proximity to where the weatherhoods are mounted. If a basement area is inconvenient or non- existent, install the unit in a utility or laundry room.

Attic installations are not recommended due to:

A) the complexity of work to install

B) freezing conditions in the attic

C) difficulty of access for servicing and cleaning

Leave sufficient clearance at the front of the access door for servicing the air filters and core. The recommended clearance is a minimum of 25" (635 mm) for opening and closing the door. Airia provides four straps for hanging the unit from the basement floor joists.

⚠ WARNING

Improper installation, adjustment, alteration, service or maintenance can cause property damage, personal injury or loss of life. Installation and service must be performed by a qualified installer or service agency.

Using Adjustable Hanging Straps to Suspend the Unit

The adjustable hanging straps are designed to reduce the possibility of noise, resonance and harmonics.

NOTE: Provide a front clearance of 25 inches (635 mm) for servicing the unit.

⚠ CAUTION

Unit must be installed level to ensure proper condensate drainage. Due to the broad range of installation and operational conditions, consider the possibility of condensation forming on either the unit or connecting ducting. Objects below the installation may be exposed to condensate.

1. Insert screws (not included) throug
and fasten to the joists. Ensure the scr
of the grommet.

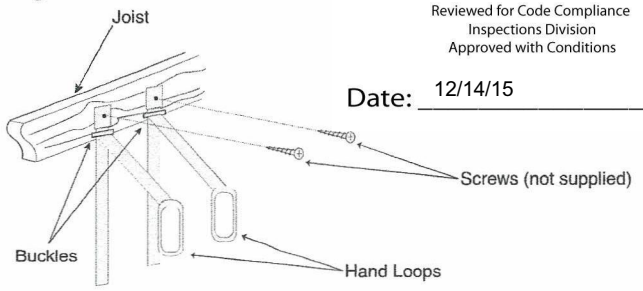

2. Unscrew the 4 machine screws located on the upper side of the unit. Attach the "S" hooks and reinsert the machine screws.

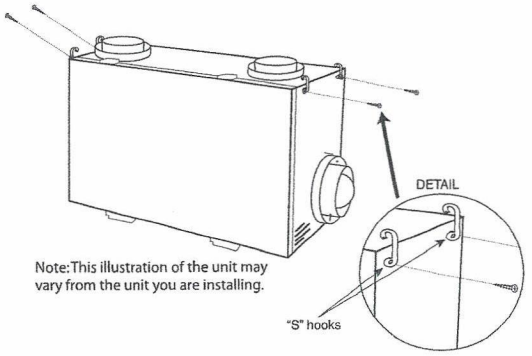

3. Hook the bottom grommets of the straps through the "S" hooks. Pull down on the hand loops while lifting up the bottom of the unit. Repeat at opposite end of the unit.

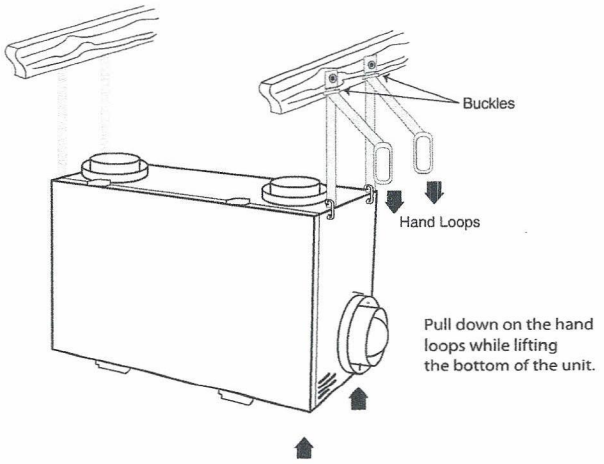

4. Make certain the unit is level. Adjust the unit down by lifting up on the buckle. Fold the hand loops and excess strap and secure with a nylon tie.

Electrical

Plug the unit into a standard designated (120 VAC) electrical outlet with ground. The use of an extension cord with this unit is not recommended. If the installation requires further wiring, have a licensed electrician make all of the electrical connections. The recommended circuit is a separate 15 amp/120 volt circuit.

WARNING:

To prevent electrical shock while either cleaning or servicing the unit, it is ***extremely important*** to confirm the polarity of the power line that is switched by the safety (disconnect) switch. The hot line (black) is the proper line for switching. To confirm the proper polarity, use a voltmeter or test lamp to ensure there is no voltage after the switch when the door is open. Check between that point and ground (on the cabinet). This procedure must be followed, as dwellings are occasionally wired improperly. Always enure the proper grounding of the unit.