TANKLESS WATER HEATER
MODEL CHART AND SPECIFICAT

Reviewed for Code Compliance
Inspections Division
Approved with Conditions

Date: 12/14/15

Value Series

	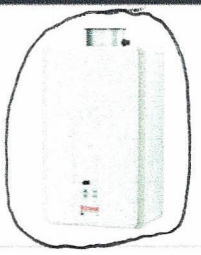	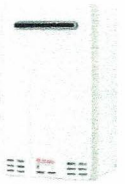			
Model	V75i	V75e	V65i	V65e	V53e
Dimensions - w, h, d Inches (mm)	14 x 23 x 9 (355.6 x 584.2 x 228.6)	14 x 23 x 9 (355.6 x 584.2 x 228.6)	14 x 23 x 9 (355.6 x 584.2 x 228.6)	14 x 23 x 9 (355.6 x 584.2 x 228.6)	14 x 21 x 7 (355.6 x 533.4 x 177.8)
Weight (lbs / kg)	45.6 / 20.7	43.6 / 19.8	45.6 / 20.7	43.9 / 19.8	34 / 15.4
Installation Type	Indoor	Outdoor	Indoor	Outdoor	Outdoor
Min./Max. BTU (natural gas)	10,300/180,000	10,300/180,000	10,300/150,000	10,300/150,000	19,000/120,000
Min./Max. BTU (propane)	10,300/180,000	10,300/180,000	10,300/150,000	10,300/150,000	20,200/120,000
Energy Factor	0.82	0.82	0.82	0.82	0.82
Temp. Range Residential	98°–140° F (37°–60° C)	98°–140° F (37°–60° C)	98°–140° F (37°–60° C)	98°–140° F (37°–60° C)	120°–140° F (49°–60° C)
Temp. Range Commercial	Residential Only				
Min. Activation Rate	0.4 gpm (1.5 lpm)	0.4 gpm (1.5 lpm)	0.4 gpm (1.5 lpm)	0.4 gpm (1.5 lpm)	0.6 gpm (2.3 lpm)
Flow Rate (70° / 50° Temp. Rise)	4.3 / 6.0 gpm (16.3 / 22.7 lpm)	4.3 / 6.0 gpm (16.3 / 22.7 lpm)	3.6 / 5.0 gpm (13.6 / 18.9 lpm)	3.6 / 5.0 gpm (13.6 / 18.9 lpm)	2.8 / 4.0 gpm (10.6 / 15.1 lpm)
Hot Water Flow Rate Range	0.26–7.5 gpm (0.98–28.4 lpm)	0.26–7.5 gpm (0.98–28.4 lpm)	0.26–6.5 gpm (0.98–24.6 lpm)	0.26–6.5 gpm (0.98–24.6 lpm)	0.60–5.3 gpm (0.98–20.1 lpm)
Controller (standard)	MC-91-2US	MC-91-2US	MC-91-2US	MC-91-2US	Status Monitor
Controllers (optional)	MC-100-1, BC-100V-1				MC-91-2US
Ultra Low NOx	yes	yes	yes	yes	no
Warranty (Residential)*	Limited 10-year on heat exchanger, 5-year on parts, 1-year on labor				
Warranty (Commercial)*	Residential Only				
Mobile Home Certified	yes	yes	yes	yes	yes
Valves Shipped in Box	no	no	no	no	no
High Altitude Approved	Up to 10,200 ft. (3,109 m)				
Certifications	AHRI and CSA				
Venting Options	Concentric	N/A	Concentric	N/A	N/A
TRS Compatible	no	no	no	no	no
½" Gas Line Compatible**	yes	yes	yes	yes	yes

* For complete information and details regarding Rinnai's warranty, visit rinnai.us.

** For complete information on gas sizing for Rinnai Tankless Water Heaters, consult the Operation and Installation Manual.

Rinnai V75i (VC

Reviewed for Code Compliance
Inspections Division
Approved with Conditions

Date: 12/14/15

Type of Appliance	☐ Temperature controlled, continuous flow, ☐ Certified for installation in manufactured (☐ Forced combustion / Direct vent
Rinnai Model Number	REU-VC2528FFU-US
Operation / Installation	Forced combustion; indoor only
Minimum/Maximum Gas Rate (Input)	10,300 - 180,000 BTU/h
Electrical	Appliance: AC 120 Volts - 60 Hz Controller: DC 12 Volts
Electrical Consumption	Normal: 76 w Standby: 2 w Anti-frost protection: 120 w
Amperage	Max: 4A Fuse: 10A
Ignition System	Direct electronic ignition
Hot Water Capacity	Minimum flow rate: 0.26 GPM (1 l/min) Minimum activation flow rate: 0.4 GPM (1.5 l/min) Maximum flow rate: 7.5 GPM (28.4 l/min)
Temperature	98° - 120° F (37° - 49° C) (factory default) Maximum temperature is selectable at 120° F(49° C) or at 140° F(60° C); 98° - 160° F(37° - 71° C) available with MCC-91-2 controller for hydronic applications
Temperature (without remote)	120° F (49° C) (factory default) or 140° F (60° C)
Installation	Indoor only
Energy Factor	Natural Gas: 0.82 Propane: 0.82
Service Connections	Gas supply: 3/4 inch MNPT Cold water inlet: 3/4 inch MNPT Hot water outlet: 3/4 inch MNPT
Water Flow Control	Water flow sensor, electronic water control device and fixed by-pass
Minimum/Maximum Water Supply Pressure	20 - 150 PSI (138-1035 KPa) (recommended 30-80 PSI (209 - 552 KPa) for optimal performance)

Rinnai is continually updating and improving products; therefore, specifications are subject to change without prior notice. Local, state, provincial and federal codes must be adhered to prior to installation.

FLOW TABLE

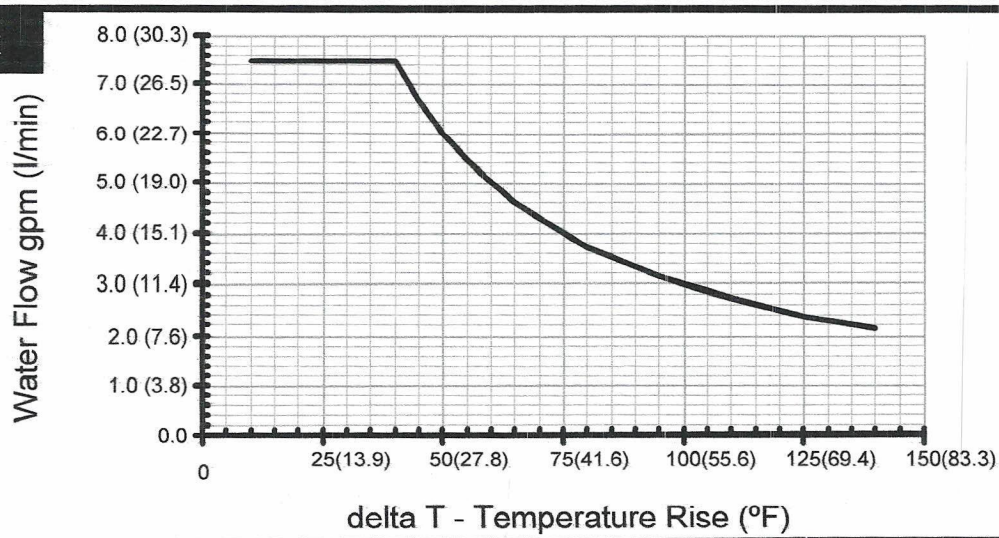

© 2015 Rinnai Corporation V75i SP(01) 7/2015

Low Lead Content NSF/ANSI 372 SANITATION

Rinnai V75i (V

Reviewed for Code Compliance
Inspections Division
Approved with Conditions

Date: 12/14/15

Water Temperature Control	Simulation feed forward and feedback
Controller	MC-91-2US (part of the front panel) Deluxe controller: MC-100V-1US (optional) Bathroom controller: BC-100V-1US (optional) MCC-91-2US (optional; for hydronic applications,
Controller Cable	Non-polarized two-core cable, minimum 22 AWG
Safety Devices	☐ Flame failure - Flame Rod ☐ Boiling protection ☐ Combustion fan rpm check ☐ Over current - glass fuse ☐ Remaining flame (OHS) ☐ Thermal fuse ☐ Automatic frost protection
Clearances from Combustibles (suitable for closet, attic, and crawl space installations)	☐ Top of heater - 6 inches(152mm) ☐ Front of heater - 6 inches(152mm)* ☐ Sides of heater - 2 inches(51mm) ☐ Back of heater - 0 inches ☐ Ground / bottom - 12 inches(305mm) ☐ From vent pipe - 0 inches
Clearances from Non-combustibles * 24 inches required for serviceability	☐ Top of heater - 2 inches(51mm) ☐ Front of heater - 6 inches(152mm)* ☐ Sides of heater - 1/2 inch(13mm) ☐ Back of heater - 0 inches ☐ Ground / bottom - 12 inches(305mm) ☐ From vent pipe - 0 inches
Min. / Max. Gas Supply Pressure	Natural Gas: min 4" W.C. (10mbar) max 10.5" W.C. (26.1mbar) Propane Gas: min 8" W.C. (20mbar) max 13.5" W.C. (33.6mbar)
Manifold Gas Pressure (inches W.C.)	Natural Gas: high fire 2.2" W.C. (5.5mbar) low fire 0.61" W.C. (1.5mbar) Propane Gas: high fire 3.8" W.C. (9.5mbar) low fire 0.87" W.C. (2.2mbar)
NOx	Complies with South Coast Air Quality Management District 14 ng/J or 20 ppm NOx emission levels

Limited Warranty

Heat exchanger: 10 years* for residential and hydronic applications, increased to 12 years* if installed with an isolation valve kit; All other parts: 5 years*; Labor: 1 year
(* reduced to 3 years if used as a circulating water heater within a circulation loop, when the water heater is in series with a circulation system and all circulating water flows through the water heater)
Refer to the manual for complete warranty information.

DIMENSIONS

WEIGHT: 45.6 lb (20.7 kg)

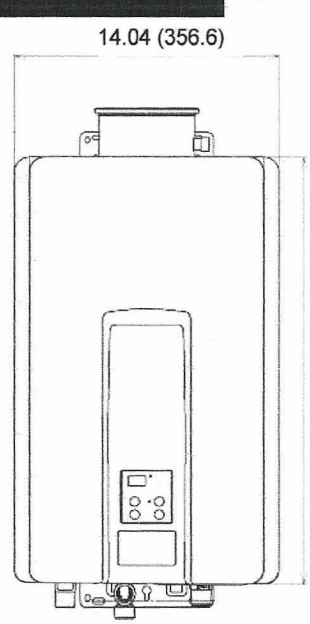

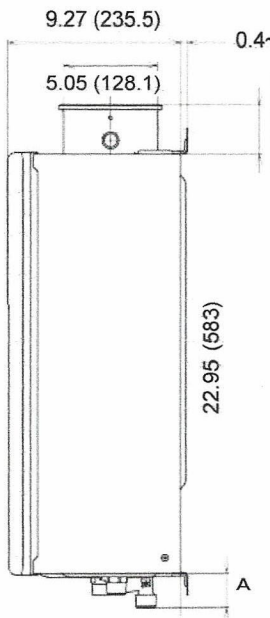

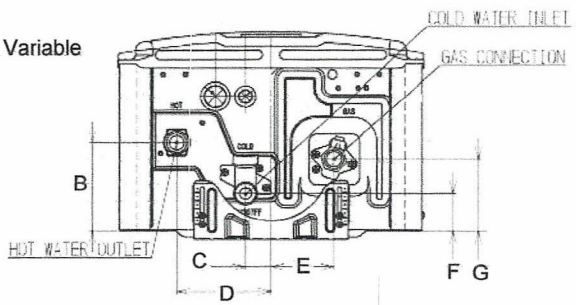

DIMENSION	Inches (mm)	DIMENSION	Inches (mm)
A (GAS)	1.31 (33.2)	D	4.33 (110)
A (COLD)	1.93 (49)	E	2.89 (73.3)
A (HOT)	1.35 (34.4)	F	1.85 (47)
B	4.21 (106.9)	G	3.44 (87.3)
C	1.17 (29.8)		