MITSUBISHI ELECTRIC

COOLING & HEATING

SUBMITTAL DATA: MSZ-GE18NA-9 & MUZ-GE18NA-

18,000 BTU/H WALL-MOUNTED HEAT-PUMP SYSTEMS

Reviewed for Code Compliance
Inspections Division
Approved with Conditions

Date: 12/14/15

Job Name:

System Reference:

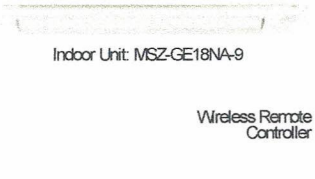

Indoor Unit: MSZ-GE18NA-9

Wireless Remote Controller

Outdoor Unit: MUZ-GE18NA-1

GENERAL FEATURES

- Wall-mounted indoor unit
- Standard Hybrid Catechin Pre¿lter is included with indoor unit
- Quiet operation
- Auto fan speed control: Quiet, Low, Medium, High, and Super High
- Hand-held Wireless Remote Controller
- Indoor unit powered from outdoor unit using A-Control
- Auto restart following a power outage
- Base heater is available as an option
- Anti-allergy Enzyme Filter
- Limited warranty: ¿ve years parts and seven years compressor

ACCESSORIES

Outdoor Unit

- □ Base Heater (MAC-641BH-U)
- □ Drain Socket Assembly (MAC-811DS)

Indoor Unit

- □ Condensate Pump (230V; SI3100-230)

Controller Options

- □ Wireless Wall-mounted Remote Controller Kit (MHK1)*
- □ Portable Central Controller (MCCH1)*
- □ Outdoor Air Sensor (MOS1)*
- □ Wired Wall-mounted Controller (PAR-31MAA requires MAC-333IF)*
- □ Simple MA Remote Controller (PAC-YT53CRAU requires MAC-333IF)*

*See Submittal for information on each option.

- □ System Control Interface (MAC-333IF)
- □ Remote Temperature Sensor (M21-JKO-307)
- □ Lockdown Bracket for Hand-held Controller (RCMKP1CB)

R410A INVERTER

Speci¿cations are subject to change without notice.

© 2015 Mitsubishi Electric US, Inc.

SPECIFICATIONS: MSZ-GE18NA-9 & MUZ-GE18N

Reviewed for Code Compliance
Inspections Division
Approved with Conditions

Date: 12/14/15

Cooling*
Rated Capacity . . . . . 17,200 Btu/h
Minimum Capacity . . . . . 3,700 Btu/h
SEER . . . . . 19.2 Btu/h/W
Total Input . . . . . 1,640 W

Heating at 47°F*
Rated Capacity . . . . . 21,600 Btu/h
Minimum Capacity . . . . . 3,500 Btu/h
HSPF . . . . . 10.0 Btu/h/W
Total Input . . . . . 1,900 W

Heating at 17°F*
Rated Capacity . . . . . 13,400 Btu/h
Rated Total Input . . . . . 1,450 W
Maximum Capacity** . . . . . 17,200 Btu/h
Maximum Total Input . . . . . 2,080 W

* Rating Conditions per AHRI Standard
Cooling | Indoor: 80° F (27° C) DB / 67° F (19° C) WB
Cooling | Outdoor: 95° F (35° C) DB / 75° F (24° C) WB
Heating at 47°F | Indoor: 70° F (21° C) DB / 60° F (16° C) WB
Heating at 47°F | Outdoor: 47° F (8° C) DB / 43° F (6° C) WB
Heating at 17° F | Indoor: 70° F (21° C) DB / 60° F (16° C) WB
Heating at 17° F | Outdoor: 17° F (-8° C) DB / 15° F (-9° C) WB

** Maximum Capacity is at full speed and performance for INVERTER-driven System.

Electrical Requirements
Power Supply . . . . . 208 / 230V, 1-Phase, 60 Hz
Breaker Size . . . . . 15 A

Voltage
IIndoor - Outdoor S1-S2 . . . . . AC 208 / 230V
Indoor - Outdoor S2-S3 . . . . . DC ±24V
Indoor - Remote Controller . . . . . MKH1 DC 3V
PAR-31MAA DC 12V
PAC-YT53CRAU DC 12V

OPERATING RANGE

		Indoor Intake Air Temp.	Outdoor Intake Air Temp.
Cooling	Maximum	90° F (32° C) DB 73° F (23° C) WB	115° F (46° C) DB
	Minimum	67° F (19° C) DB 57° F (14° C) WB	14° F (-10° C) DB
Heating	Maximum	80° F (27° C) DB 67° F (19° C) WB	75° F (24° C) DB 65° F (18° C) WB
	Minimum	70° F (21° C) DB 60° F (16° C) WB	-4° F (-20° C) DB -5° F (-21° C) WB

Indoor Unit
MCA . . . . . .
Blower Motor (ECM) . . . . . .
AirÀow (Quiet - Lo - Med - Hi - Super
Cooling . . . . . 230 -
194 - 2
Heating . . . . . 230 -

Sound Pressure Level (Quiet - Lo - Med - Hi - Super Hi)
Cooling . . . . . 28 - 33 - 38 - 44 - 49 dB(A)
Heating . . . . . 28 - 33 - 38 - 43 - 49 dB(A)

DIMENSIONS	UNIT INCHES / MM
W	31-7/16 / 799
D	9-1/8 / 232
H	11-5/8 / 295

Weight . . . . . 22 lbs. / 10 kg
External Finish . . . . . Munsell No. 1.0Y 9.2 / 0.2
Field Drainpipe Size O.D. . . . . 5/8" / 15.88 mm

Outdoor Unit
Compressor . . . . . DC Inverter-driven Twin Rotary
MCA . . . . . 14 A
Fan Motor (ECM) . . . . . 0.93 F.L.A.
Sound Pressure Level
Cooling . . . . . 54 dB(A)
Heating . . . . . 56 dB(A)

DIMENSIONS	INCHES / MM
W	33-1/16 / 840
D	13 / 330
H	33-7/16 / 849

Weight . . . . . 119 lbs. / 54 kg
External Finish . . . . . Munsell No. 3Y 7.8 / 1.1
Refrigerant Type R410A
Refrigerant Pipe Size O.D.
Gas Side . . . . . 1/2" / 12.7 mm
Liquid Side . . . . . 1/4" / 6.35 mm
Max. Refrigerant Pipe Length . . . . . 100 ft. / 30 m
Max. Refrigerant Pipe Height Difference . . . . . 50 ft. / 15 m
Connection Method . . . . . Flared

Notes:

Speci¿cations are subject to change without notice.
© 2015 Mitsubishi Electric US, Inc.

DIMENSIONS: MSZ-GE18NA-9 & MUZ-GE18NA-

Reviewed for Code Compliance
Inspections Division
Approved with Conditions

Date: 12/14/15

MSZ-GE18NA-9

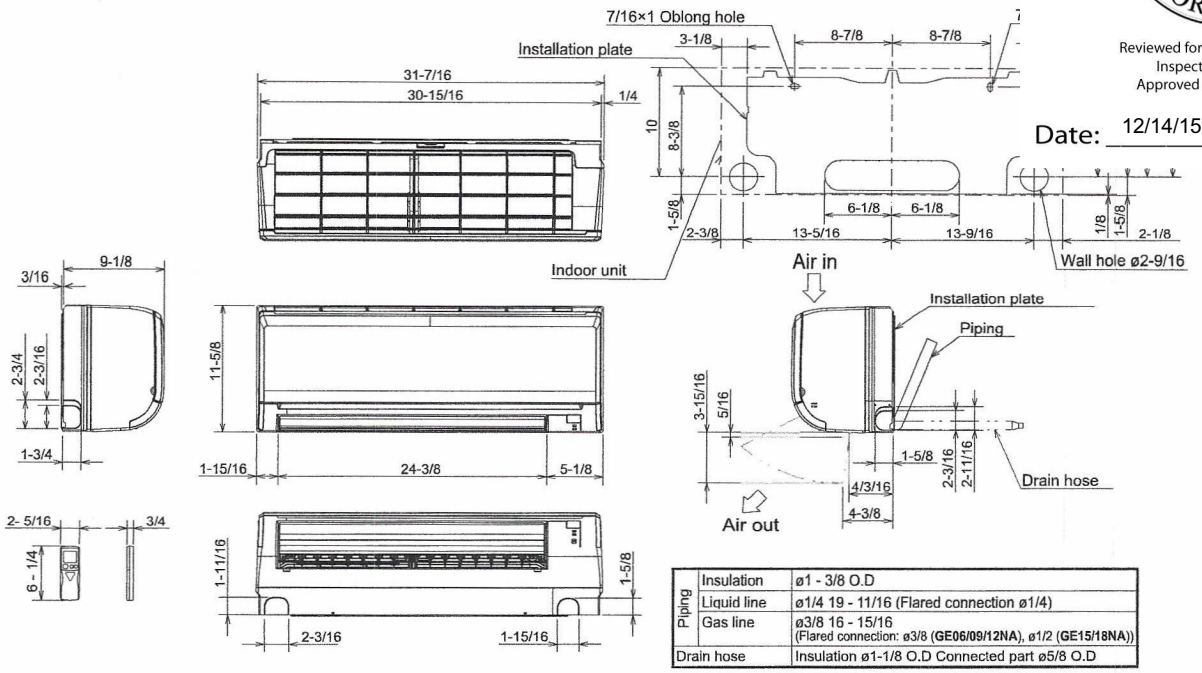

Piping	Insulation	ø1 - 3/8 O.D
	Liquid line	ø1/4 19 - 11/16 (Flared connection ø1/4)
	Gas line	ø3/8 16 - 15/16 (Flared connection: ø3/8 (**GE06/09/12NA**), ø1/2 (**GE15/18NA**))
Drain hose		Insulation ø1-1/8 O.D Connected part ø5/8 O.D

MUZ-GE18NA-1

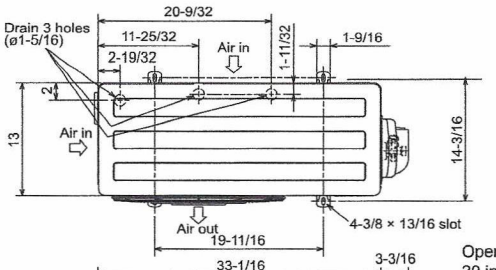

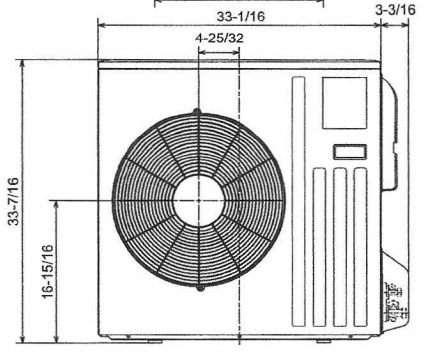

REQUIRED SPACE

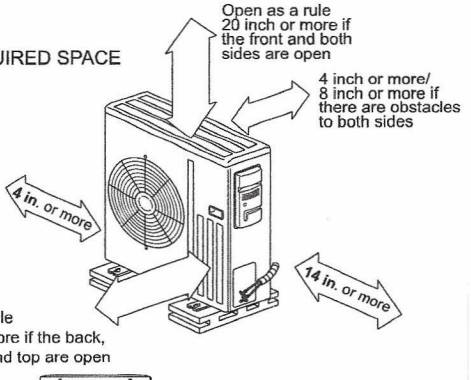

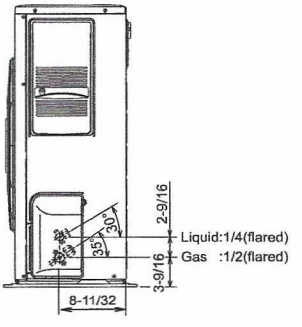

MITSUBISHI ELECTRIC
COOLING & HEATING

1340 Satellite Boulevard
Suwanee, GA 30024
Toll Free: 800-433-4822
www.mehvac.com

FORM# MSZ-GE18NA-9 & MUZ-GE18NA-1 - 201503

Speci¿cations are subject to change without notice.
© 2015 Mitsubishi Electric US, Inc.