HYDRAULIC-SYSTEM

THIS BUILDING IS PROTECTED BY A HYDRAULICALLY DESIGNED AUTOMATIC SPRINKLER SYSTEM

LOCATION: AREA # 1

NO. OF SPRINKLERS: 19

BASIS OF DESIGN
1. DENSITY: .15 GPM SQ FT
2. DESIGNED AREA OF DISCHARGE: 1675 SQ. FT.

SYSTEM DEMAND
1. GPM DISCHARGE: 364.55 GPM
2. RESIDUAL PRESSURE AT THE BASE OF THE RISER: 26.508 PSI

HYDRAULIC NAMEPLATE DETAIL

HYDRAULIC-SYSTEM

THIS BUILDING IS PROTECTED BY A HYDRAULICALLY DESIGNED AUTOMATIC SPRINKLER SYSTEM

LOCATION: AREA # 2

NO. OF SPRINKLERS: 3

BASIS OF DESIGN
1. DENSITY: .10 GPM SQ FT
2. DESIGNED AREA OF DISCHARGE: 165 SQ. FT.

SYSTEM DEMAND
1. GPM DISCHARGE: 47.56 GPM
2. RESIDUAL PRESSURE AT THE BASE OF THE RISER: 48.189 PSI

HYDRAULIC NAMEPLATE DETAIL

HYDRAULIC-SYSTEM

THIS BUILDING IS PROTECTED BY A HYDRAULICALLY DESIGNED AUTOMATIC SPRINKLER SYSTEM

LOCATION: AREA # 3

NO. OF SPRINKLERS: 4

BASIS OF DESIGN
1. DENSITY: .10 GPM SQ FT
2. DESIGNED AREA OF DISCHARGE: 575 SQ. FT.

SYSTEM DEMAND
1. GPM DISCHARGE: 53.13 GPM
2. RESIDUAL PRESSURE AT THE BASE OF THE RISER: 40.055 PSI

HYDRAULIC NAMEPLATE DETAIL

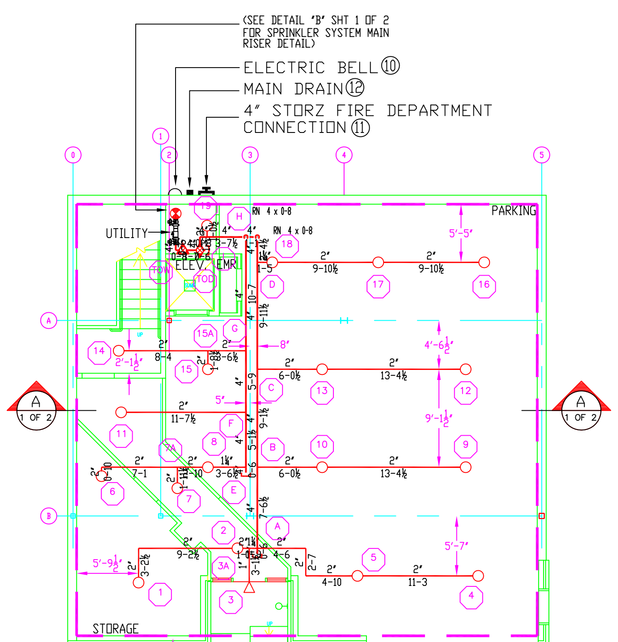

Design Area No. 1 – ORD I
Density .15 Area 1675
Flow 614.550gpm @ 27.803 psi
Includes 250 gpm Hose allowance

NOTE: ALL CEILINGS TO BE GWB @ 8'-0" UNLESS OTHERWISE NOTED ON PLAN
SPRINKLER MAINS AND LINES INSTALLED EXPOSED WITH BRASS UPRIGHTS

BASEMENT PLAN
1\8"=1'-0"
FINISH FLOOR ELEVATION: 100'-0"
AREA PROTECTED: 1,675' SQ. FT.

VICTAULIC MODEL "V2704" BRASS UPRIGHT
155° / 18 — ½"
K-FACTOR = 5.6
SIN # "V2704"
SYMBOL = ○

VICTAULIC MODEL "V2710" WHITE RECESSED SIDEWALL
155° / 1 — ½"
K-FACTOR = 5.6
SIN # "V2710"
SYMBOL = ◁

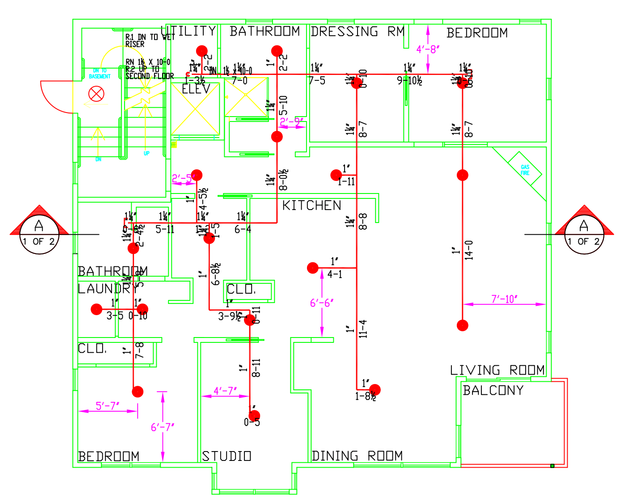

NOTE: ALL CEILINGS TO BE GWB @ 9'-6" UNLESS OTHERWISE NOTED ON PLAN
SPRINKLER MAINS AND LINES INSTALLED CONCEALED ABOVE THE CEILINGS

FIRST FLOOR
1\8"=1'-0"
FINISH FLOOR ELEVATION: 110'-0"
AREA PROTECTED: 1,730' SQ. FT.

VICTAULIC MODEL "V2742" WHITE CONCEALED PENDENT
155° / 18 — 7/16"
K-FACTOR = 4.9
SIN # "V2742"
SYMBOL = ●

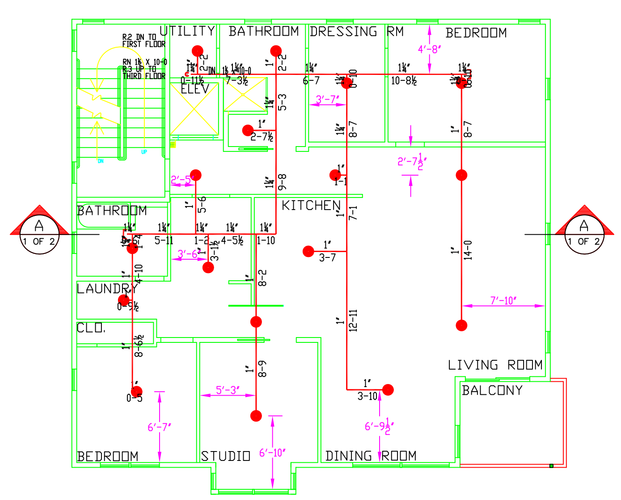

NOTE: ALL CEILINGS TO BE GWB @ 9'-1" UNLESS OTHERWISE NOTED ON PLAN
SPRINKLER MAINS AND LINES INSTALLED CONCEALED ABOVE THE CEILINGS

SECOND FLOOR
1\8"=1'-0"
FINISH FLOOR ELEVATION: 120'-10"
AREA PROTECTED: 1,735' SQ. FT.

VICTAULIC MODEL "V2742" WHITE CONCEALED PENDENT
155° / 17 — 7/16"
K-FACTOR = 4.9
SIN # "V2742"
SYMBOL = ●

Design Area No. 3 – LIGHT
Density .10 Area 575
Flow 153.133gpm @ 40.512 psi
Includes 100 gpm Hose allowance

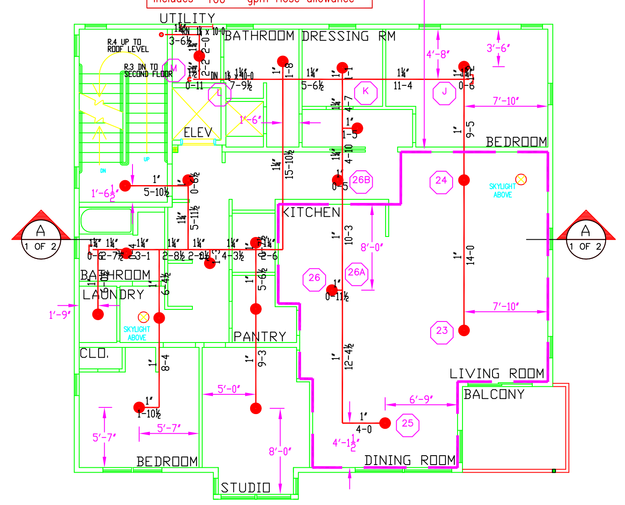

NOTE: ALL CEILINGS TO BE GWB @ 9'-1½" UNLESS OTHERWISE NOTED ON PLAN
SPRINKLER MAINS AND LINES INSTALLED CONCEALED ABOVE THE CEILINGS

THIRD FLOOR
1\8"=1'-0"
FINISH FLOOR ELEVATION: 131'-8"
AREA PROTECTED: 1,735' SQ. FT.

VICTAULIC MODEL "V2742" WHITE CONCEALED PENDENT
155° / 20 — 7/16"
K-FACTOR = 4.9
SIN # "V2742"
SYMBOL = ●

Design Area No. 2 – LIGHT
Density .10 Area 165
Flow 147.562gpm @ 48.642 psi
Includes 100 gpm Hose allowance

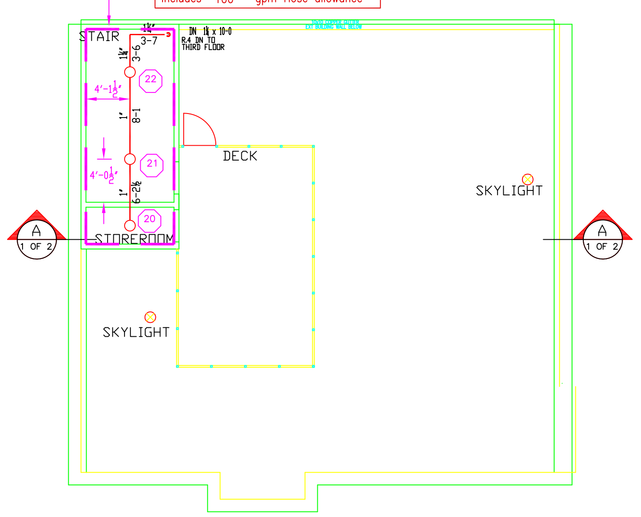

ROOF PLAN
1\8"=1'-0"
FINISH FLOOR ELEVATION: 143'-0"
AREA PROTECTED: 165' SQ. FT.

VICTAULIC MODEL "V2704" BRASS UPRIGHT
155° / 3 — ½"
K-FACTOR = 5.6
SIN # "V2704"
SYMBOL = ○

DENALI
FIRE PROTECTION, INC.
DESIGN INSTALLATION SERVICE
78 ROLLER RINK ROAD
OXFORD, MAINE 04270
(207) 539-4226 FAX (207) 539-8544

SCALE 1/8"=1'-0"

General Notes

1. All Pipe Locations are to be Field Measured Prior to Fabrication and Installation by Sprinkler Contractor.
2. All Dimensions Shown are Center to Center.
3. High Temperature Heads are to be Field Located Where Required.
4. All Pipes and Hangers are to be Installed per NFPA #13.
5. Hangers are to be U.L. Listed and F.M. Approved.

Symbols

Symbol	Description
○	Hydraulic Reference Points
[18 ea]	Elev. Below Top of Steel
{8-4}	Elev. Above Finished Floor
+ (TOS 20-0)	Elev. of Top of Steel
(CEIL)	Ceiling Height
—/—	Denotes Hanger Location
o	Rise up or down

Number of Sprinklers

Total This Sheet	Total This Job

Symbol	Description

Drawing Title	FP-2 FLOOR PLANS
Contract No.	R20-10
Drawn By	CKD
Scale	AS NOTED
Date	07/29/10
Approval By	SFM/PFD

Revisions:	Date:

Job:
29 WATERVILLE STREET
29 WATERVILLE STREET
PORTLAND, MAINE

Contractor:
DENALI FIRE PROTECTION, INC.
78 ROLLER RINK ROAD
OXFORD, MAINE 04270

SHEET 2 OF 2