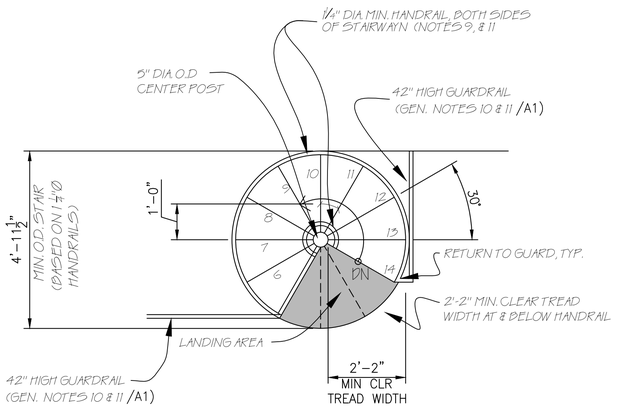

UPPER LEVEL SPIRAL STAIR PLAN

SCALE: 1/2" = 1'-0"

SEE GENERAL NOTES ON DRAWING A1

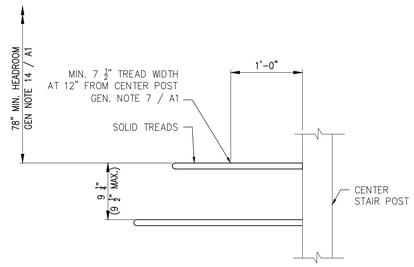

STAIR TREAD DETAIL

1"=1'-0"

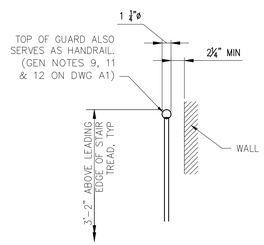

GUARD/HAND RAIL DETAIL

1"=1'-0"

NOTES:
SEE GENERAL NOTE 9 ON DRAWING A1

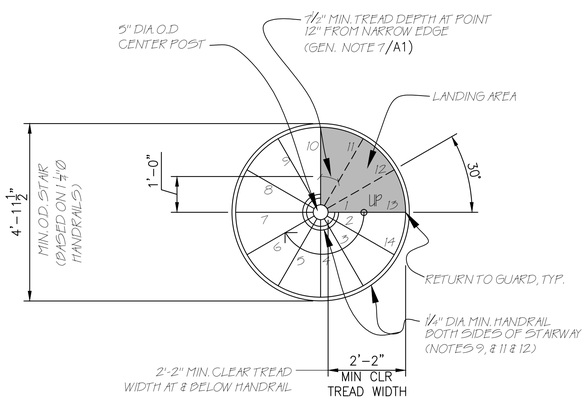

LOWER LEVEL SPIRAL STAIR PLAN

SCALE: 1/2" = 1'-0"

SEE GENERAL NOTES ON DRAWING A1

SPIRAL STAIR ACCESS TO ROOF DECK

14 RISERS AT 9 ¼" = 10'-9 ½"

13 TREADS (MIN. 2'-2" TREAD WIDTH AT & BELOW THE HANDRAIL
(MIN. 7 ½" TREAD WIDTH REQUIRED AT 12" FROM CENTER POST
(SEE PLAN AND GENERAL NOTE 7 ON DRAWING A1

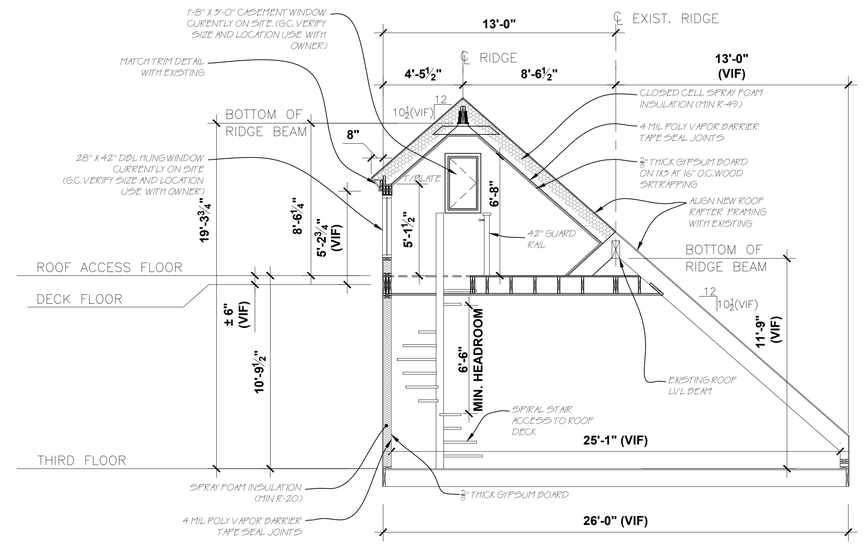

SECTION 1

1/4"=1'-0"

NOTE:
SEE STRUCTURAL DRAWINGS FOR ACCESS FLOOR AND ROOF FRAMING DETAILS

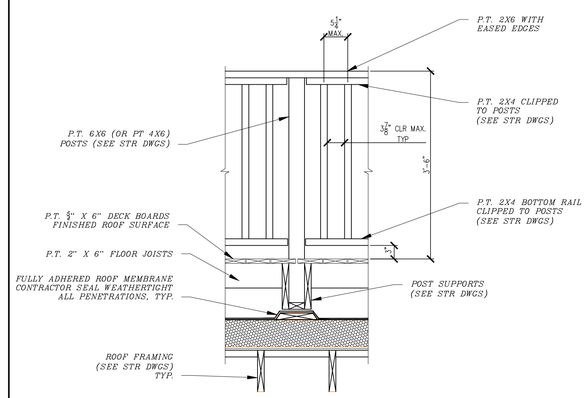

ROOF DECK GUARD RAIL DETAIL 3

NOTE:
SEE STRUCTURAL DRAWINGS FOR DECK FRAMING DETAILS

1 1/2"=1'-0"

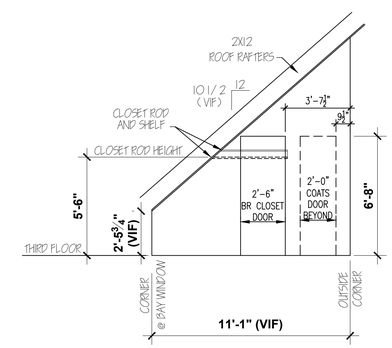

SCHEMATIC INTERIOR ELEVATION 2

1 1/2"=1'-0"

NOTE:
VERIFY HEIGHTS ABOVE DOORS FOR ROUGH OPENING FRAMING

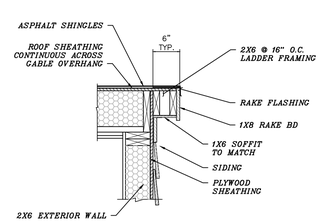

ROOF ACCESS STRUCTURE GABLE OVERHANG DETAIL 4

1 1/2"=1'-0"

REGISTERED ARCHITECT JOHN H. LEASURE No. 310 STATE OF MAINE

REV.	DATE	STATUS
	8-01-14	ISSUED FOR CONSTRUCTION

JOHN H. LEASURE ARCHITECT, INC.
6 Q STREET
SOUTH PORTLAND, MAINE 04106

RENOVATIONS AND ADDITIONS
52 MONUMENT STREET
PORTLAND, MAINE

SPIRAL STAIR AND DETAILS

A4