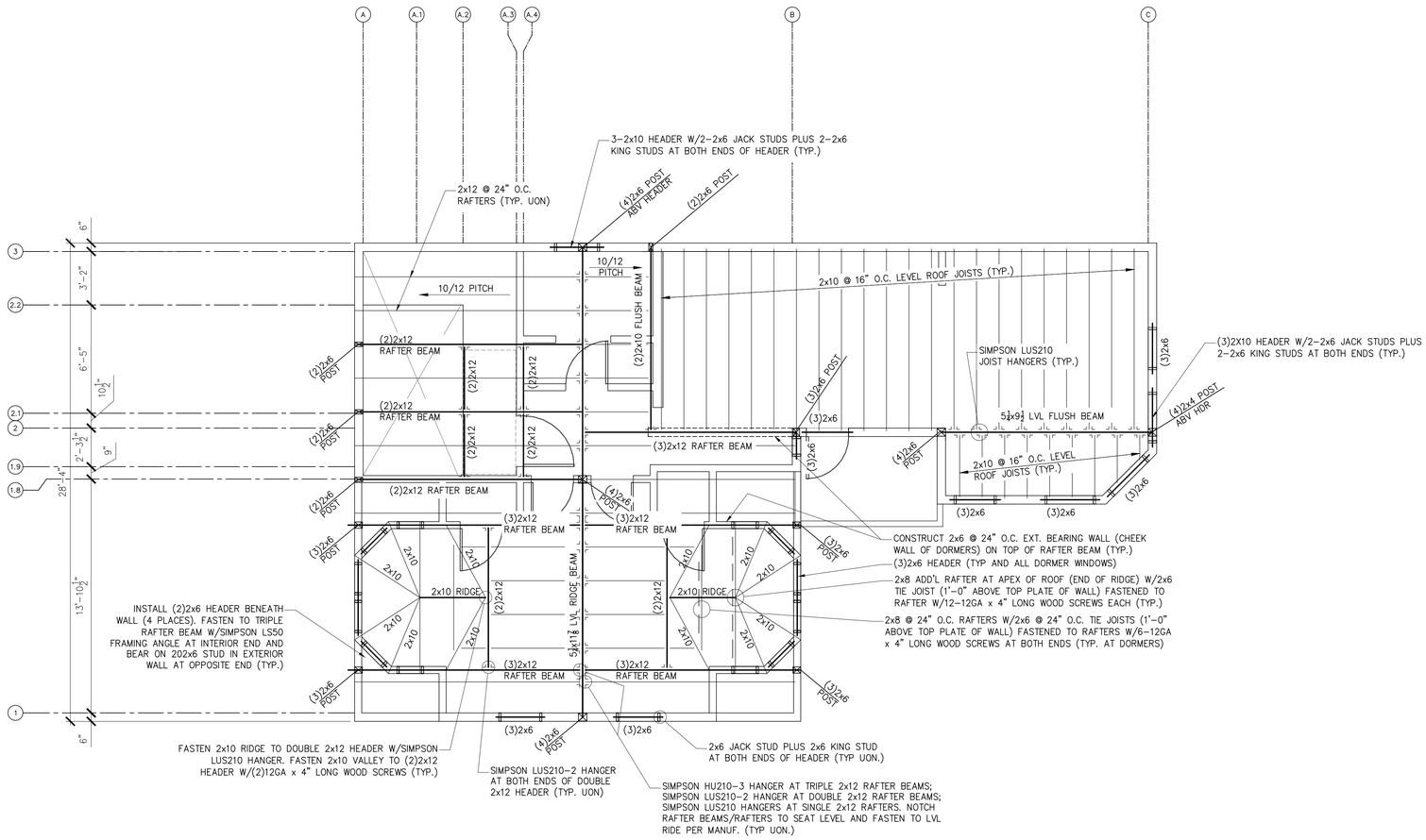

ROOF FRAMING PLAN

1/4" = 1'-0"

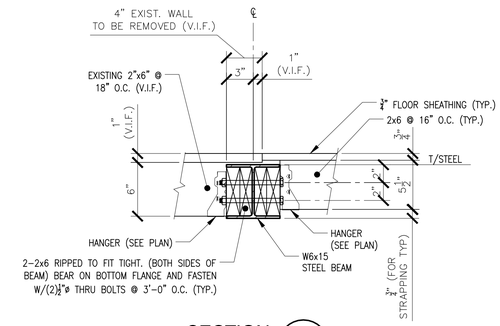

SECTION 1 / S3/S4

1 1/2" = 1'-0"

THESE DRAWINGS HAVE BEEN DEVELOPED BY L&L STRUCTURAL ENGINEERING SERVICES, INC. FOR THE TITLED SET ONLY. THE DRAWINGS ARE THE SOLE PROPERTY OF L&L ENGINEERING SERVICES, INC. AND THEY SHALL NOT BE USED, LENT, COPIED OR ALTERED WITHOUT THE WRITTEN CONSENT OF L&L STRUCTURAL ENGINEERING SERVICES, INC.

L & L STRUCTURAL
ENGINEERING SERVICES, INC.
SIX Q STREET
SOUTH PORTLAND, MAINE
PHONE: (207) 767-4830
FAX: (207) 799-5432

CITY OF PORTLAND, MAINE — RESURGAM
Reviewed for Code Compliance
Inspections Division
Approved with Conditions
Date: 12/11/13

STATE OF MAINE — JOSEPH H. LEASURE No. 6242 — LICENSED PROFESSIONAL ENGINEER

rev.	date	description	appr'd
A	11/8/13	FOR PERMIT ONLY	JHL

designed by: JHL
drawn by: RJW
checked by: JHL
scale: AS NOTED
date: 11/6/2013
plot date: 11/6/2013
project # 2013-139

RESIDENTIAL BUILDING LOCATED AT
52 MONUMENT STREET
PORTLAND, MAINE

RENOVATION
ROOF FRAMING PLAN, AND SECTIONS

S5