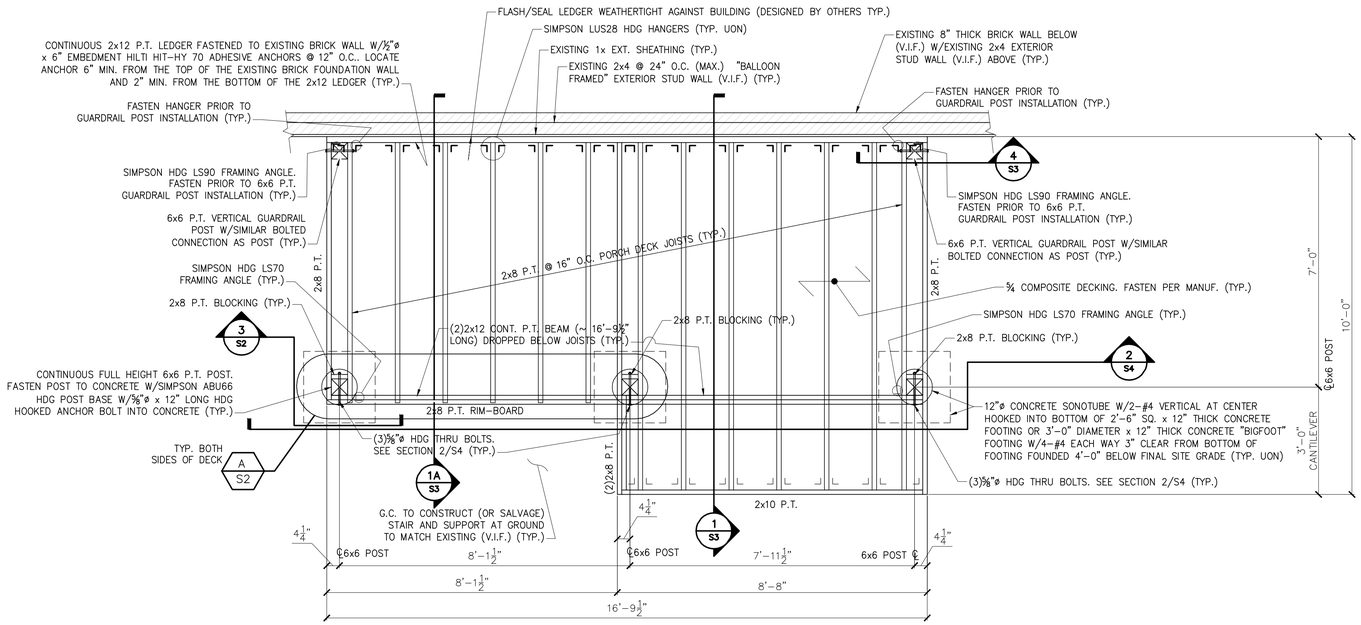

EXTERIOR PORCH DECK FOUNDATION AND FIRST FLOOR FRAMING PLAN

1/2" = 1'-0"

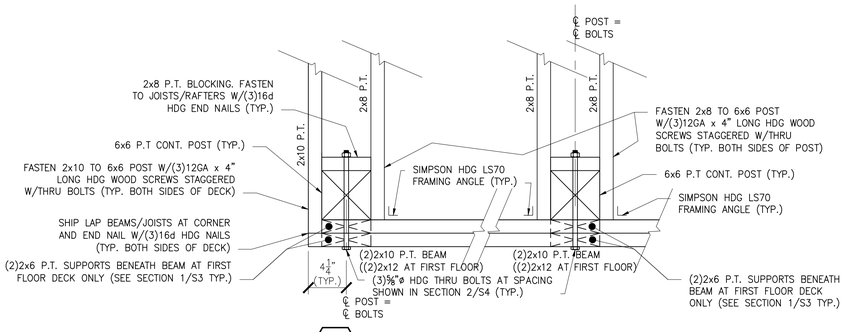

DETAIL A/S2 TYPICAL DECK CORNER

1 1/2" = 1'-0"

NOTES:
1. FASTEN BEAM MEMBERS TOGETHER W/(2)ROWS OF 12GA x 3" LONG S.S. WOOD SCREWS @ 12" O.C. (2" FROM TOP AND BOTTOM OF BEAM) (TYP.).
2. 6x6 POST SHALL BE CONTINUOUS THRU FLOOR/DECK (TYP.).

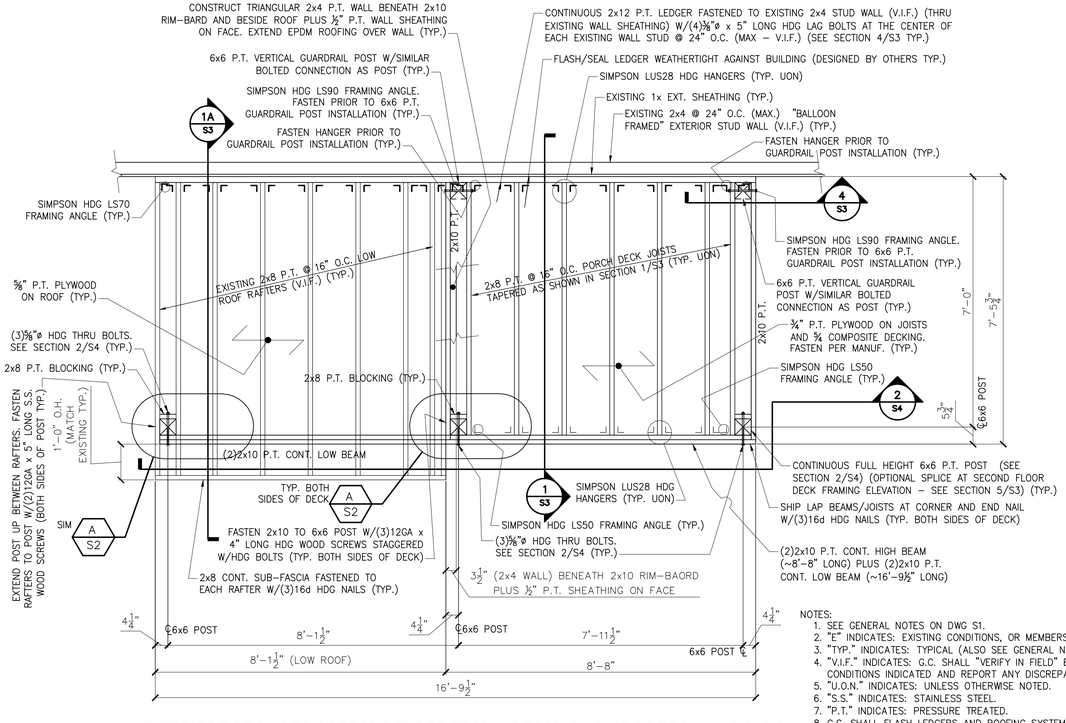

EXTERIOR PORCH DECK SECOND FLOOR FRAMING PLAN & LOW ROOF FRAMING PLAN

1/2" = 1'-0"

NOTES:
1. SEE GENERAL NOTES ON DWG S1.
2. "E" INDICATES: EXISTING CONDITIONS, OR MEMBERS.
3. "TYP." INDICATES: TYPICAL (ALSO SEE GENERAL NOTE #5).
4. "V.I.F." INDICATES: G.C. SHALL "VERIFY IN FIELD" EXISTING DIMENSIONS, ELEVATIONS, OR CONDITIONS INDICATED AND REPORT ANY DISCREPANCIES TO THE ENGINEER.
5. "U.O.N." INDICATES: UNLESS OTHERWISE NOTED.
6. "S.S." INDICATES: STAINLESS STEEL.
7. "P.T." INDICATES: PRESSURE TREATED.
8. G.C. SHALL FLASH LEDGERS AND ROOFING SYSTEMS WEATHERTIGHT (DESIGNED BY OTHERS TYP.).
9. DETERMINE EXISTING DECK DIMENSIONS AND ELEVATIONS PRIOR TO DEMOLITION OF EXISTING DECK TO MATCH EXISTING DECK DIMENSIONS AND ELEVATIONS (TYP.).
10. CONFIRM EXISTING STEP OUT OF MAIN BUILDING (TO BE 4" MIN. AS SHOWN V.I.F.) (TYP.).
11. TRIM TO BE INSTALLED ON BEAMS, POSTS, FASCIA SHALL BE 1x AZEK (TYP.).
12. GUARDRAIL (TO BE DESIGNED BY OTHERS) SHALL BE AROUND THREE SIDES OF EACH EXTERIOR DECK AT 3'-0" MIN. HEIGHT ABOVE DECK. GUARDRAILS AND HANDRAILS ON STAIR (TO BE DESIGNED BY OTHERS) SHALL BE CONSTRUCTED IN ACCORDANCE W/THE IBC CODE (TYP.).

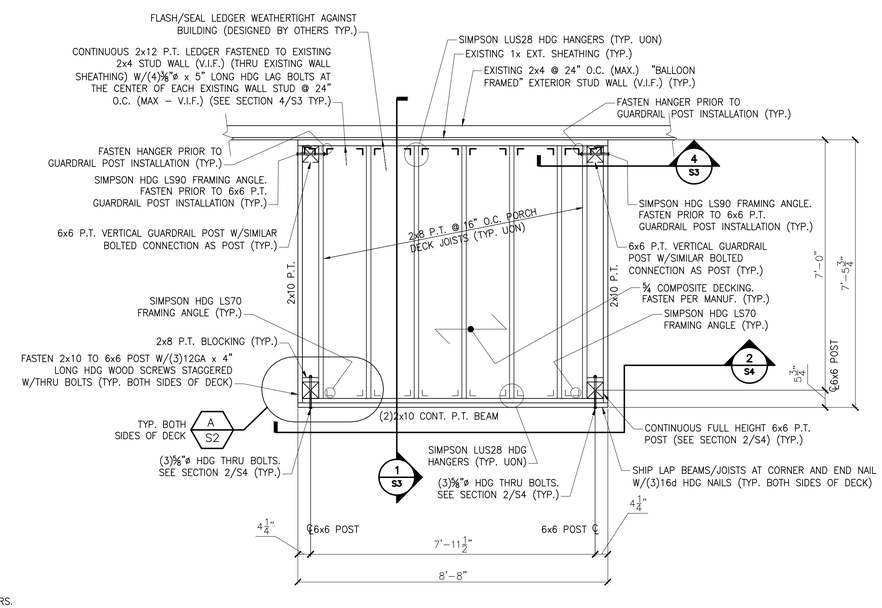

EXTERIOR PORCH DECK THIRD FLOOR FRAMING PLAN

1/2" = 1'-0"

THESE DRAWINGS HAVE BEEN DEVELOPED BY L&L STRUCTURAL ENGINEERING SERVICES, INC. FOR THE TITLED SET ONLY. THE DRAWINGS ARE THE SOLE PROPERTY OF L&L ENGINEERING SERVICES, INC. AND THEY SHALL NOT BE USED, LENT, COPIED OR ALTERED WITHOUT THE WRITTEN CONSENT OF L&L STRUCTURAL ENGINEERING SERVICES, INC.

L & L STRUCTURAL ENGINEERING SERVICES, INC.
SIX Q STREET
SOUTH PORTLAND, MAINE
PHONE: (207) 767-4830
FAX: (207) 799-5432
EMAIL: JLEASURE@L-L-ENG.COM

CITY OF PORTLAND, MAINE — RESURGAM
Reviewed for Code Compliance
Inspections Division
Approved with Conditions
Date: 08/05/16

STATE OF MAINE — JOSEPH H. LEASURE No. 6242 — LICENSED PROFESSIONAL ENGINEER

rev.	date	description	appr'd

designed by: JHL
drawn by: RJW
checked by: JHL
scale: AS NOTED
date: 06/28/2016
plot date: 06/28/2016
project #: 2015-107

RESIDENTIAL BUILDING LOCATED AT
1 ST. LAWRENCE STREET
PORTLAND, MAINE

PORCH/DECK REPAIR/REPLACEMENT
PORCH FRAMING PLANS AND DETAILS

S2