WINDOW SCHEDULE

MARK	SIZE WIDTH	SIZE HEIGHT	Style	NOTES
1	2'-5 1/2"	4'-0"	Casement	--
2	2'-5 1/2"	4'-0"	Casement	Egress
3	3'-0"	2'-0"	Awning	--
4	1'-11 1/2"	2'-0"	Awning	--
5	2'-11 1/2"	5'-0"	Casement	--
6	2'-11 1/2"	5'-0"	Casement	--
7	1'-11 1/2"	4'-0"	Casement	--
8	2'-5 1/2"	4'-0"	Casement	--
9	2'-5 1/2"	4'-0"	Picture	--
10	2'-5 1/2"	4'-0"	Casement	--
11	2'-11 1/2"	5'-0"	Picture	--
12	2'-11 1/2"	5'-0"	Picture	--
13	2'-11 1/2"	5'-0"	Picture	--
14	2'-11 1/2"	5'-0"	Casement	--
15	2'-11 1/2"	5'-0"	Casement	--
16	2'-11 1/2"	5'-0"	Casement	Egress
17	2'-11 1/2"	5'-0"	Casement	Egress
19	2'-11 1/2"	5'-4"	Casement	--
20	1'-11 1/2"	4'-0"	Casement	--
21	2'-11 1/2"	5'-0"	Picture	Egress
22	2'-11 1/2"	5'-0"	Casement	Egress
23	2'-11 1/2"	5'-0"	Casement	Egress
24	2'-11 1/2"	5'-0"	Picture	Egress
25	2'-11 1/2"	4'-0"	Casement	--
26	3'-4 1/2"	2'-5"	Picture	--
27	3'-4 1/2"	2'-5"	Picture	--
28	3'-4 1/2"	2'-5"	Awning	--
29	3'-11 1/2"	2'-5"	Awning	--
30	3'-11 1/2"	2'-5"	Picture	--
31	3'-11 1/2"	2'-5"	Picture	--
32	2'-11 1/2"	5'-4"	Casement	--

DOOR SCHEDULE

MARK	SIZE WD	SIZE HGT	MATL	GLAZING	FIRE RATING LABEL	NOTES
1	3'-0"	7'-0"	--	--	--	--
2	4'-6"	6'-8"	--	--	--	--
3	2'-8"	6'-8"	--	--	--	--
4	3'-0"	6'-8"	--	--	--	--
5	3'-0"	6'-8"	--	--	--	--
6	3'-0"	6'-8"	--	--	--	--
7	2'-8"	6'-8"	--	--	--	--
8	3'-0"	6'-8"	--	--	--	--
9	2'-4"	6'-8"	--	--	--	--
10	2'-8"	6'-8"	--	--	--	1 Hr rated
11	9'-0"	8'-0"	--	--	--	--
12	6'-0"	7'-0"	--	--	--	--
13	3'-0"	6'-8"	--	--	--	--
14	2'-4"	6'-8"	--	--	--	--
15	2'-0"	6'-8"	--	--	--	--
16	2'-8"	7'-0"	--	--	--	--
17	2'-6"	7'-0"	--	--	--	Barn type slider
18	3'-0"	7'-0"	--	--	--	--
19	3'-6"	6'-8"			--	Barn type sliding
20	2'-8"	7'-0"	--	--	--	--
21	4'-6"	7'-0"	--	--	--	--
22	2'-8"	6'-10"	--	--	--	Barn type slider
23	2'-8"	6'-10"	--	--	--	--
24	3'-0"	7'-0"	--	--	--	--

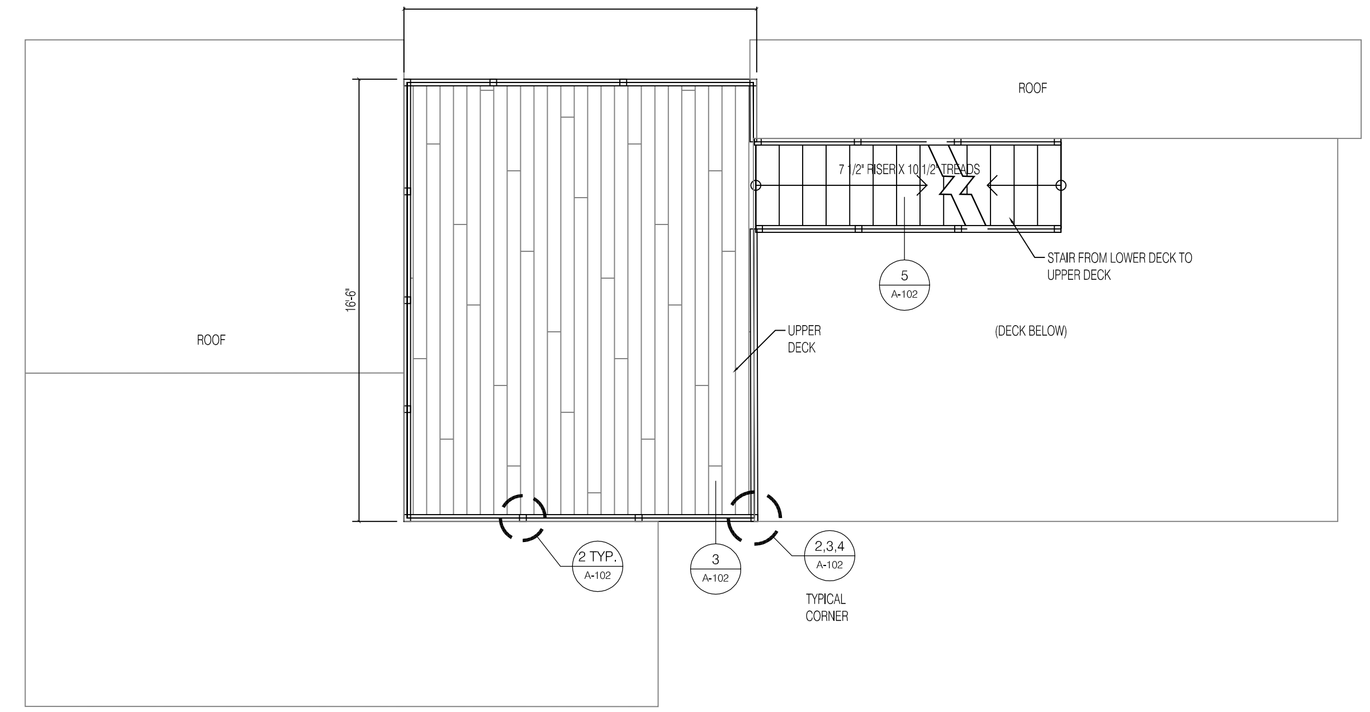

1 UPPER DECK PLAN
1/4" = 1'-0"

SCALE: 1/4" = 1'-0"

WINDOW NOTES:
ALL WINDOWS SHALL BE LOW E, ARGON FILLED INSULATING GLASS.
ALL WINDOWS TO HAVE A U-FACTOR RATING OF 0.30 OR BETTER.
ALL WINDOW GRILLES SHALL BE SIMULATED DIVIDED LITE.

ALL GLAZING SHALL CONFORM TO IRC 2012 R308
WINDOW GLAZING WITH SILL HTS LESS THAN 18" TO BE TEMPERED.
WINDOW GLAZING 24" OR CLOSER TO DOORS SHALL BE TEMPERED.
WINDOW GLAZING 36" OR CLOSER TO STAIRWAYS AND 36" OR LESS ABOVE FLOOR SHALL BE TEMERED.
WINDOW GLAZING WITHIN 60" OF THE BOTTOM OF A STAIRWAY AND LESS THAN 36" ABOVE THE FLOOR SHALL BE TEMERED.

ALL WINDOWS SHALL CONFORM TO R312.2 WINDOW FALL PROTECTION
ALL WINDOWS WITH SILL HTS LESS THAN 24" AND MORE THAN 72" ABOVE GRADE TO HAVE OPENING LIMITERS TO RESITRICT OPENING TO 4".

R310 EMERGENCY ESCAPE AND RESCUE OPENINGS
SLEEPING ROOMS SHALL HAVE AT LEAST ONE EGRESS WINDOW WITH A SILL HT OF NOT MORE THAN 44", A MINIMUM CLEAR OPENING HEIGHT OF 24" AND A MINIMUM
CLEAR OPENING WIDTH OF 20"

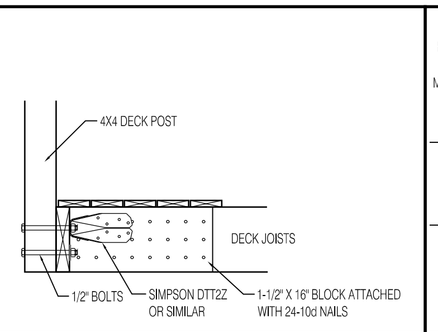

2 DECK POST ATTACHMENT
1" = 1'-0"

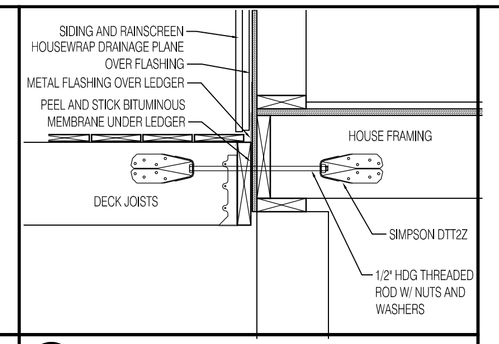

3 DECK LEDGER ATTACHMENT
1" = 1'-0"

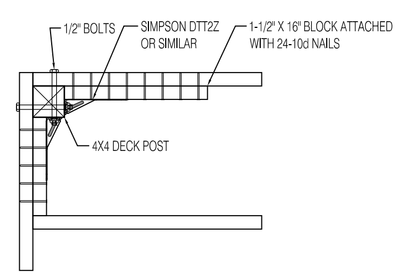

4 DECK POST ATTACHMENT
1" = 1'-0"

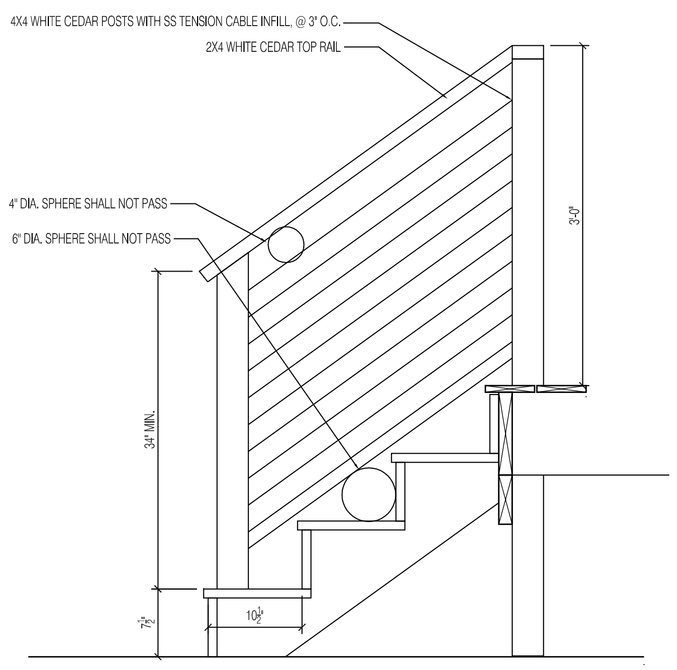

5 DECK STAIR DETAIL
1" = 1'-0"

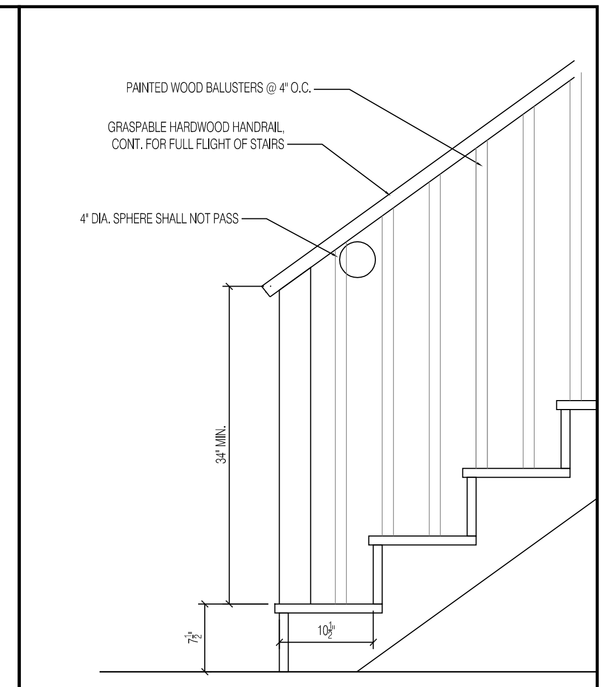

7 INTERIOR STAIR DETAIL
1" = 1'-0"

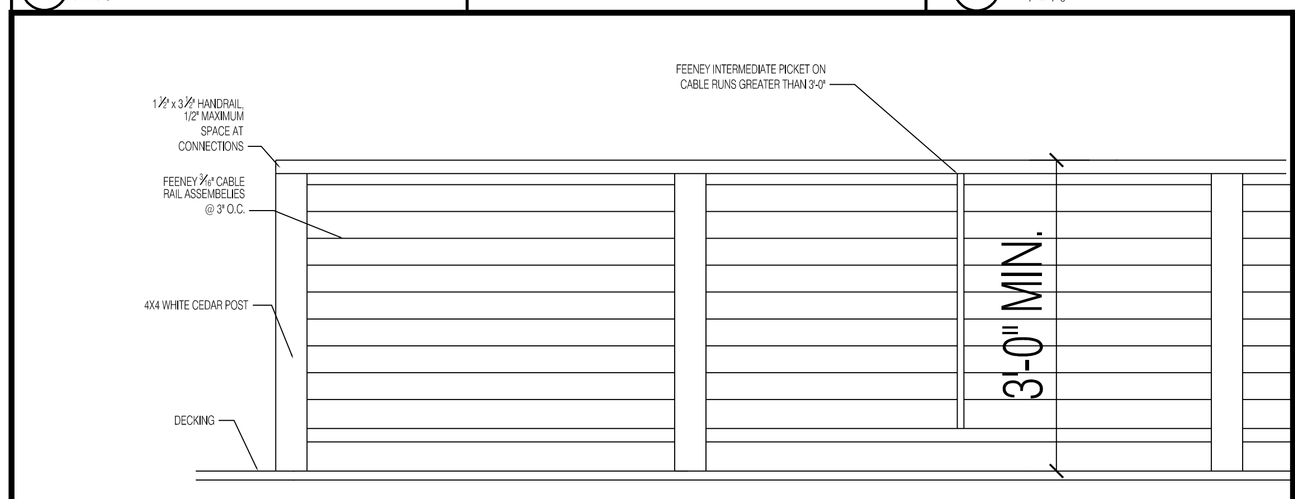

6 DECK RAILING DETAIL
1" = 1'-0"

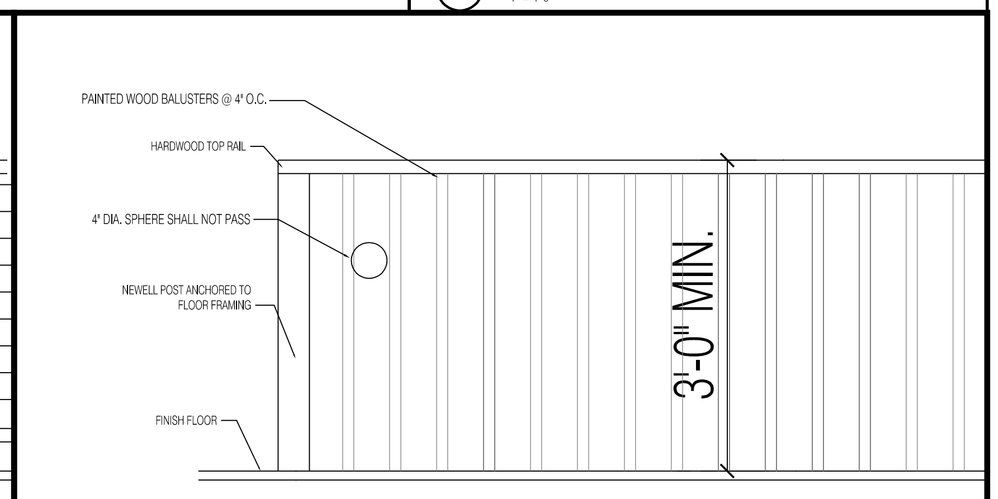

8 INTERIOR RAILING DETAIL
1" = 1'-0"

0 6" 1' 2'
SCALE: 1" = 1'-0"

PROSPECT DESIGN
58 FORE ST. PORTLAND, ME
www.prospectdesign.me
T: 207 - 749 - 7400

MONUMENT STREET
30 MONUMENT ST
PORTLAND, ME

REGISTERED ARCHITECT JOSEPH P. HEWES NO. 1442 STATE OF MAINE

SHEET TITLE
UPPER DECK PLAN, SCHEDULES AND STAIR DETAILS

PERMIT SET
NOT FOR CONSTRUCTION

REVISION

DRAWN BY: BB
DATE: October 21, 2014

A-102