PLAN SYMBOLS

SYMBOL	DESCRIPTION
	125V, 20A, DUPLEX GROUNDED RECEPTACLE GFI = Ground Fault Type WP = Weatherproof AC = Mount 6" Above Sink or Counter 36" = Indicates Exact Mounting Height Above Finished Floor #3 = Indicates Circuit Breaker (Including But Not Limited to Receptacles)
	125V, 20A, SIMPLEX GROUNDED RECEPTACLE
	125V, 20A, QUAD GROUNDED RECEPTACLE
	TEL/DATA OUTLET
TV	CABLE TELEVISION OUTLET
DIS	DOOR INTERCOM STATION
	ELECTRIC PANELBOARD (See Plans for Details)
	CONTROL PANEL (See Plans for Details)
LC	UNIT LOAD CENTER
S L	FIRE ALARM SMOKE DETECTOR Indicates Localized Detector
C L	FIRE ALARM CARBON MONOXIDE SENSOR Indicates Localized Detector
H	FIRE ALARM HEAT DETECTOR
F *	FIRE ALARM AUDIO VISUAL Indicates Visual Only
F	FIRE ALARM PULL STATION
#2 J1	CEILING MTD. FLUORESCENT LIGHT Circuit Number Fixture Designation
W6	WALL MOUNTED LIGHT FIXTURE Fixture Designation
R1	RECESSED/CEILING MOUNTED LIGHT FIXTURE Fixture Designation
S3	LIGHT/DEVICE SWITCH 3 = Three-Way Type
M	CEILING MTD LTG CONTROL MOTION SENSOR
MOD	MOTOR OPERATED DAMPER (Provided Under Div 15)
SM	MANUAL MOTOR SWITCH
J	JUNCTION BOX
J RH	120V, DIRECT CONNECTION, RANGE HOOD
J DP	120V, DIRECT CONNECTION, DISPOSER
J DW	120V, DIRECT CONNECTION, DISHWASHER
J EO	208V, 1PH DIRECT CONNECTION, ELECTRIC DOUBLE OVEN
J FP	120V, DIRECT CONNECTION, FIREPLACE
J WC	120V, DIRECT CONNECTION, WINE COOLER
J WHP	120V, DIRECT CONNECTION, WATER HEATER PUMPS
J TW	120V, (700W) DIRECT CONNECTION, TOWEL WARMER
J EH	120V, DIRECT CONNECTION, ELECTRIC HEAT
J ES	120V, DIRECT CONNECTION, FUTURE ELECTRIC DOOR STRIKE
T	LINE VOLTAGE THERMOSTAT

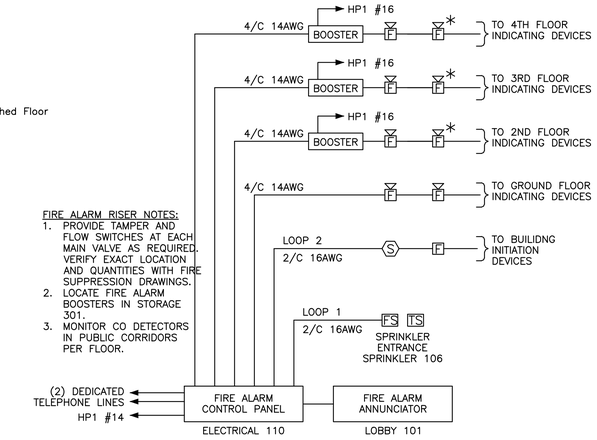

FIRE ALARM RISER NOTES:
1. PROVIDE TAMPER AND FLOW SWITCHES AT EACH MAIN VALVE AS REQUIRED. VERIFY EXACT LOCATION AND QUANTITIES WITH FIRE SUPPRESSION DRAWINGS.
2. LOCATE FIRE ALARM BOOSTERS IN STORAGE 301.
3. MONITOR CO DETECTORS IN PUBLIC CORRIDORS PER FLOOR.

FIRE ALARM RISER DIAGRAM

NOT TO SCALE

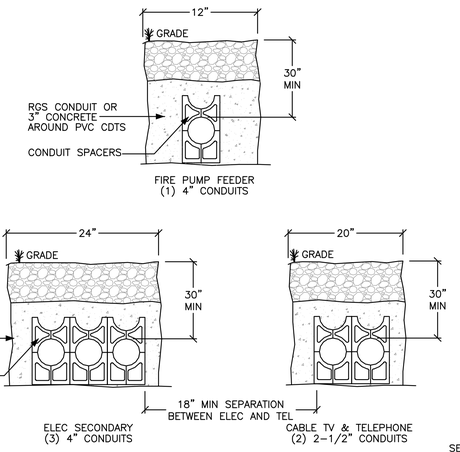

DUCT SECTIONS

NOT TO SCALE

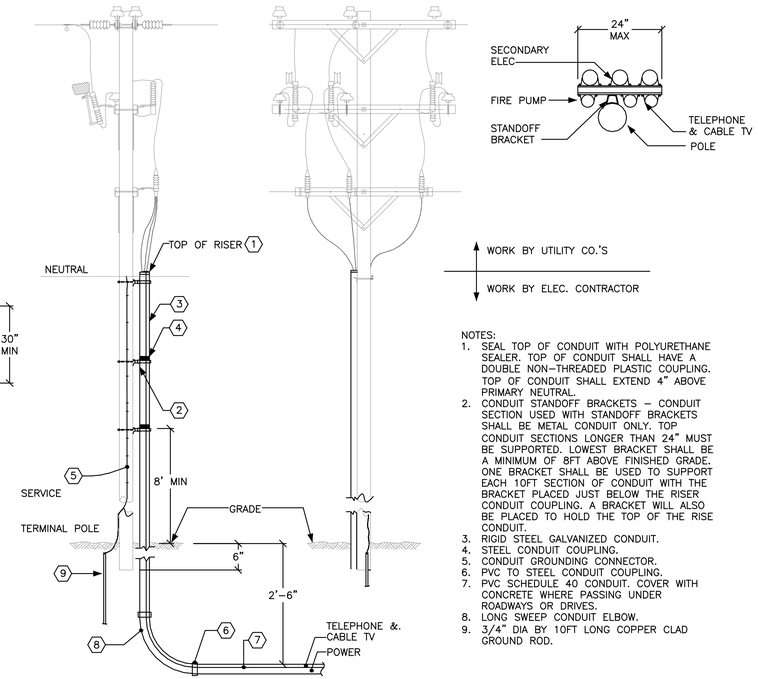

NOTES:
1. SEAL TOP OF CONDUIT WITH POLYURETHANE SEALER. TOP OF CONDUIT SHALL HAVE A DOUBLE NON-THREADED PLASTIC COUPLING. TOP OF CONDUIT SHALL EXTEND 4" ABOVE PRIMARY NEUTRAL.
2. CONDUIT STANDOFF BRACKETS – CONDUIT SECTION USED WITH STANDOFF BRACKETS SHALL BE METAL CONDUIT ONLY. TOP CONDUIT SECTIONS LONGER THAN 24" MUST BE SUPPORTED. LOWEST BRACKET SHALL BE A MINIMUM OF 8FT ABOVE FINISHED GRADE. ONE BRACKET SHALL BE USED TO SUPPORT EACH 10FT SECTION OF CONDUIT WITH THE BRACKET PLACED JUST BELOW THE RISER CONDUIT COUPLING. A BRACKET WILL ALSO BE PLACED TO HOLD THE TOP OF THE RISE CONDUIT.
3. RIGID STEEL GALVANIZED CONDUIT.
4. STEEL CONDUIT COUPLING.
5. CONDUIT GROUNDING CONNECTOR.
6. PVC TO STEEL CONDUIT COUPLING.
7. PVC SCHEDULE 40 CONDUIT. COVER WITH CONCRETE WHERE PASSING UNDER ROADWAYS OR DRIVES.
8. LONG SWEEP CONDUIT ELBOW.
9. 3/4" DIA BY 10FT LONG COPPER CLAD GROUND ROD.

UTILITY RISER POLE DETAIL

NOT TO SCALE

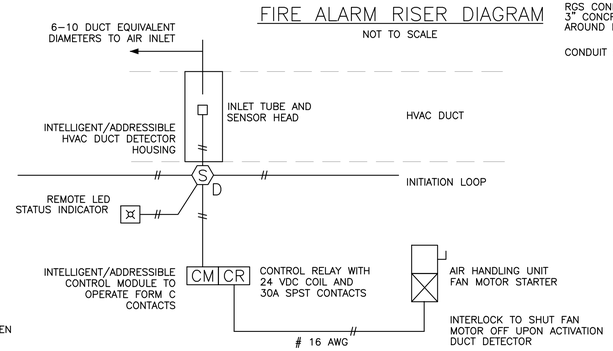

INSTALL DUCT DETECTORS IN CONFORMANCE WITH NFPA 90A

PROVIDE SINGLE DUCT DETECTOR FOR HVAC UNITS SIZED 2000 CFM – 4000 CFM. PROVIDE DUCT DETECTORS IN BOTH SUPPLY AND RETURN DUCTS FOR HVAC UNITS SIZED ABOVE 4000 CFM.

HVAC FIRE ALARM INTERFACE WIRING DIAGRAM

NOT TO SCALE

SINGLE LINE DIAGRAM SYMBOLS

SYMBOL	DESCRIPTION
	Ampere Frame Rating (3 poles Except as Noted Otherwise)
225 AF 200 AT	CIRCUIT BREAKER
	Ampere Trip Rating
	ELECTRICAL CONNECTION
	GROUND CONNECTION
	EQUIPMENT ENCLOSURE
	TRANSFORMER
200/3 FU:175	FUSED SWITCH
	Ampere Rating/No. of Poles Fuse Size
M	UTILITY CO. SERVICE METER

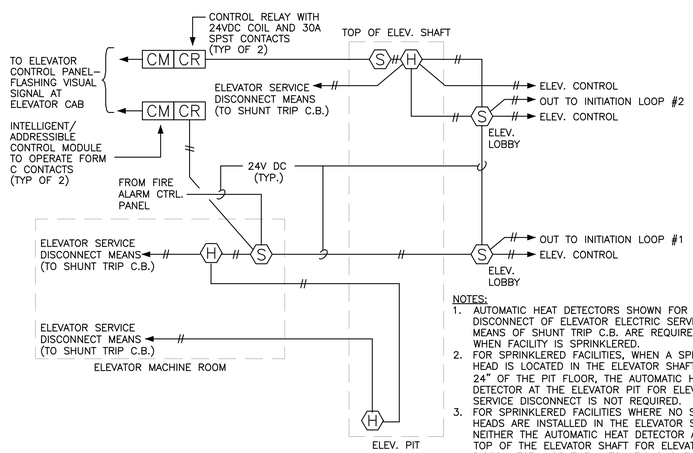

NOTES:
1. AUTOMATIC HEAT DETECTORS SHOWN FOR AUTOMATIC DISCONNECT OF ELEVATOR ELECTRIC SERVICE BY MEANS OF SHUNT TRIP C.B. ARE REQUIRED ONLY WHEN FACILITY IS SPRINKLERED.
2. FOR SPRINKLERED FACILITIES, WHEN A SPRINKLER HEAD IS LOCATED IN THE ELEVATOR SHAFT WITHIN 24" OF THE PIT FLOOR, THE AUTOMATIC HEAT DETECTOR AT THE ELEVATOR PIT FOR ELEVATOR SERVICE DISCONNECT IS NOT REQUIRED.
3. FOR SPRINKLERED FACILITIES WHERE NO SPRINKLER HEADS ARE INSTALLED IN THE ELEVATOR SHAFT, NEITHER THE AUTOMATIC HEAT DETECTOR AT THE TOP OF THE ELEVATOR SHAFT FOR ELEVATOR DISCONNECT, NOR THE AUTOMATIC SMOKE DETECTOR AT THE TOP OF THE ELEVATOR ARE REQUIRED.
4. ADJUST QUANTITY OF SMOKE DETECTORS AND INITIATION LOOPS AS NECESSARY TO ACCOMMODATE ALL ELEVATOR STOPS.

INSTALL DETECTORS AND WIRING IN CONFORMANCE WITH STATE ELEVATOR CODE.

ELEVATOR FIRE ALARM INTERFACE WIRING DIAGRAM

NOT TO SCALE

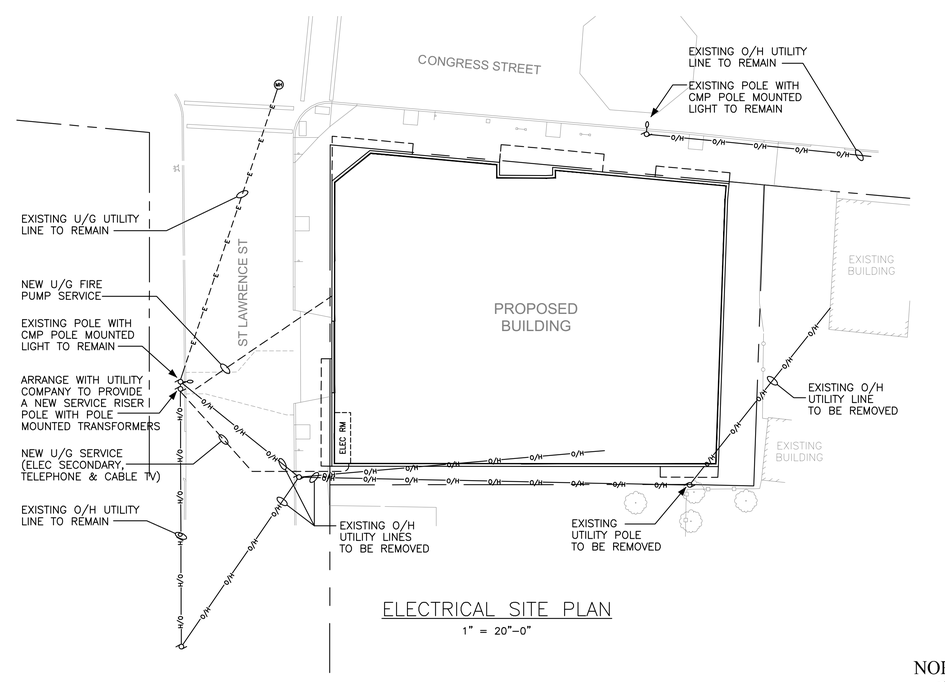

ELECTRICAL SITE PLAN

1" = 20"-0"

NORTH

Reviewed for Code Compliance
Inspections Division
Approved with Conditions
Date: 10/01/14
3/11/14

Prepared For:
118 on Munjoy Hill, LLC
118 Congress Street
Portland, Maine

Consultant:
Bartlett Design
LIGHTING & ELECTRICAL ENGINEERING
942 WASHINGTON STREET, BATH, ME 04530
TEL (207) 442-0447 FAX (207) 442-0600

Architect:
ARCHETYPE architects
448 Union Wharf Portland, Maine 04101
(207) 772-6022 ARCHETYPE@ARCHETYPEPA.COM

Project:
118 ON MUNJOY HILL
118 CONGRESS STREET
PORTLAND, MAINE

Revisions:
01/27/14 50% Pricing Set
02/26/14 100% Construction Documents
03/12/14 Revised Const Docs

Scale: As Noted

Date: 27 JAN 2014

ELECTRICAL
SITE PLAN & DETAILS

E0.01