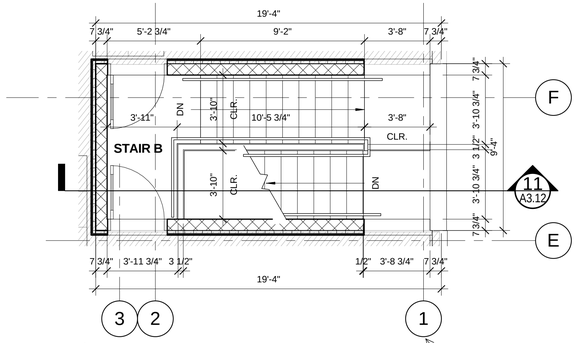

12 STAIR B - ROOF ACCESS
1/4" = 1'-0"

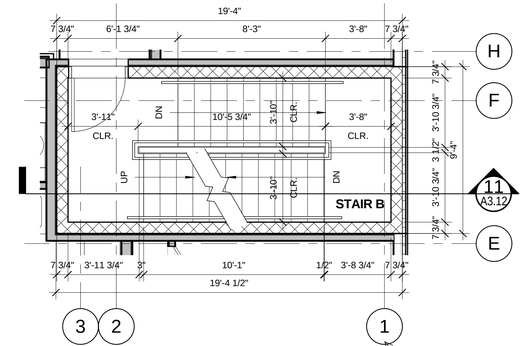

10 STAIR B - FOURTH FLOOR
1/4" = 1'-0"

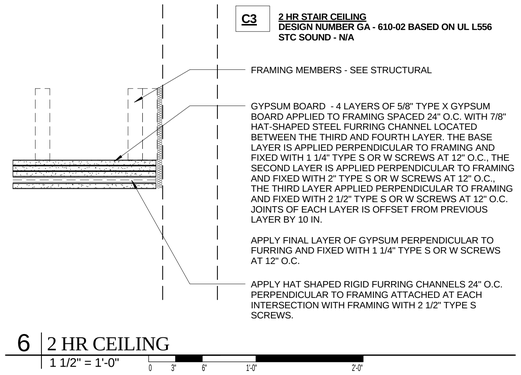

6 2 HR CEILING
1 1/2" = 1'-0"

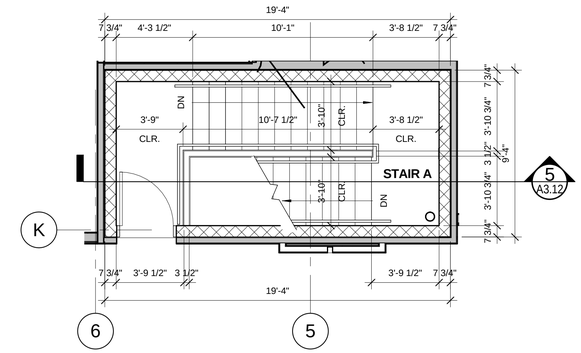

4 STAIR A - FOURTH FLOOR
1/4" = 1'-0"

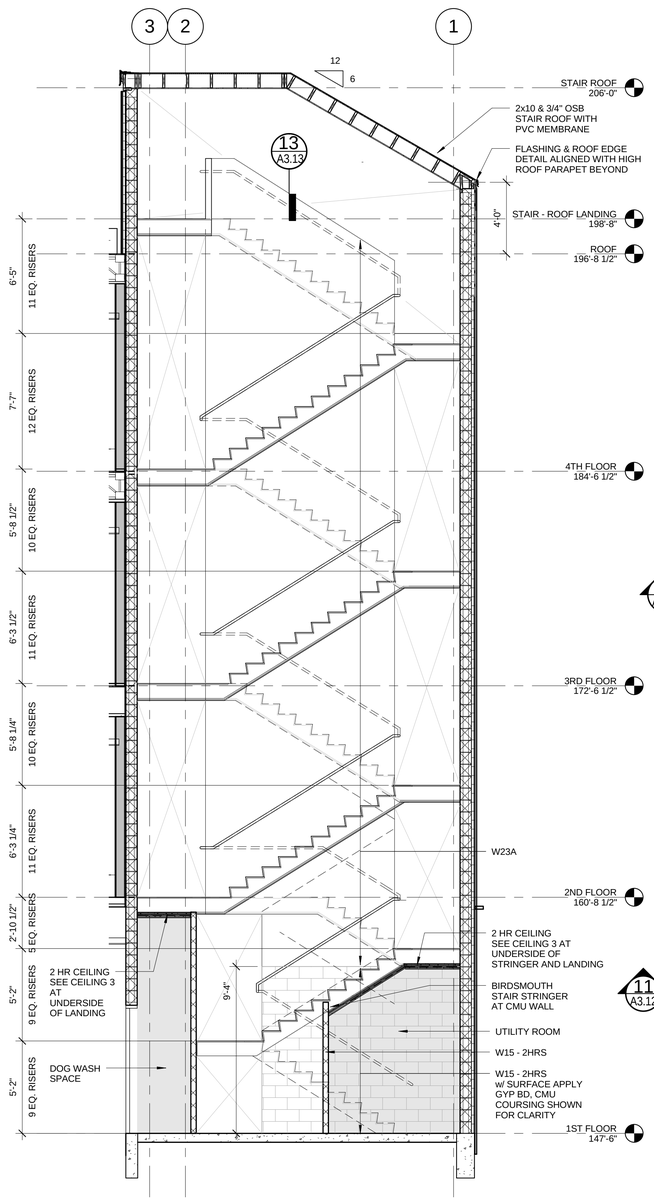

11 STAIR SECTION - STAIR B
1/4" = 1'-0"

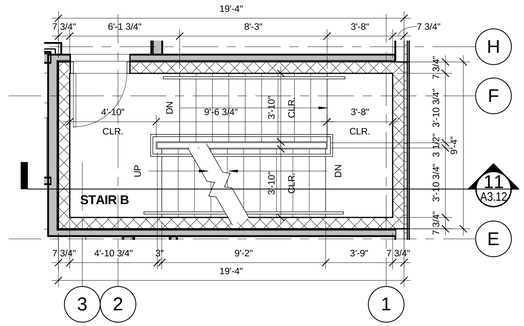

9 STAIR B - THIRD FLOOR
1/4" = 1'-0"

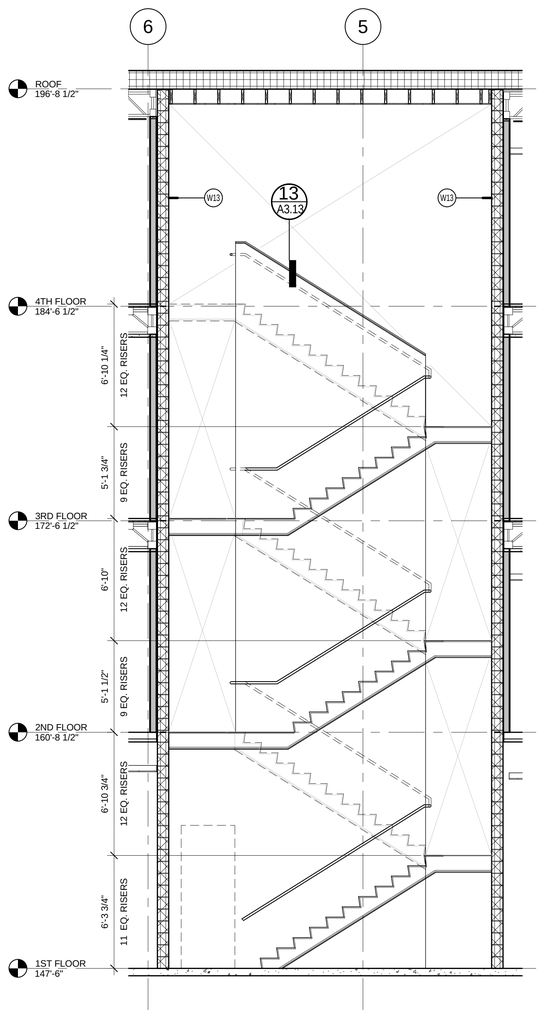

5 STAIR SECTION - STAIR A
1/4" = 1'-0"

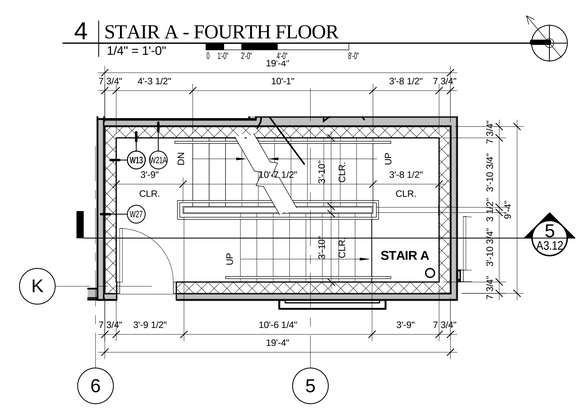

3 STAIR A - THIRD FLOOR
1/4" = 1'-0"

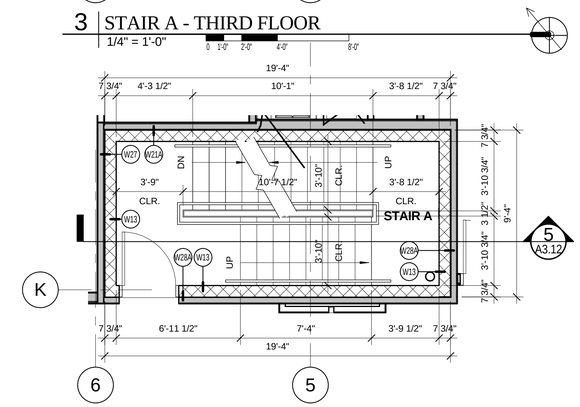

2 STAIR A - SECOND FLOOR
1/4" = 1'-0"

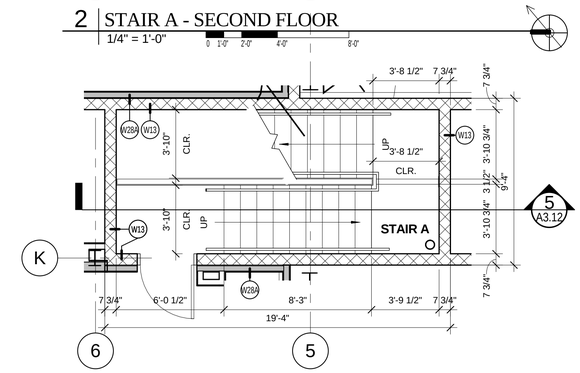

1 STAIR A - FIRST FLOOR
1/4" = 1'-0"

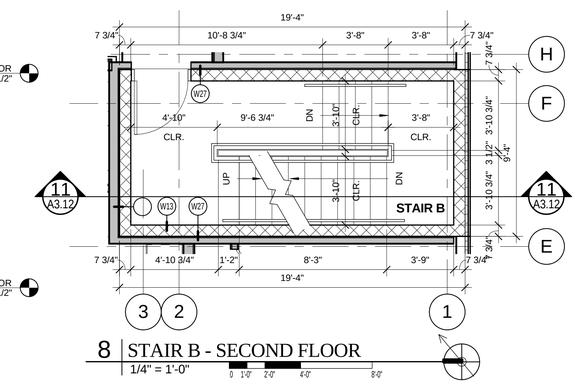

8 STAIR B - SECOND FLOOR
1/4" = 1'-0"

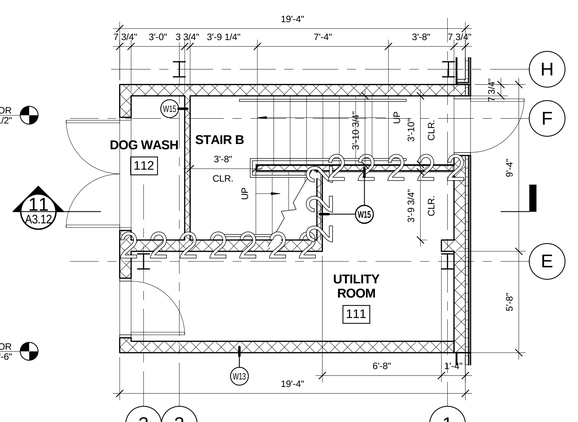

7 STAIR B - FIRST FLOOR
1/4" = 1'-0"

LICENSED ARCHITECT
DAVID LLOYD
NO. 936
STATE OF MAINE

Prepared For:
118 on Munjoy Hill, LLC
118 CONGRESS STREET
PORTLAND, ME 04101

Consultant:

Architect:
ARCHETYPE architects
48 Union Wharf Portland, Maine 04101
(207) 772-6022 Fax (207) 772-4056

Project:
118 ON MUNJOY HILL
118 CONGRESS STREET
PORTLAND, MAINE

Revisions:

Scale: As indicated

Date: 07 MAR 2014

STAIR SECTIONS & PLANS

A3.12