
GP LAM® LVL

GP LAM® LVL FEATURES & BENEFITS

- Resists shrinking, warping, splitting and checking
- 2.0E has exceptional design values for bending, stiffness and shear strength
- FiberGuard® sealant provides short-term protection from moisture during the construction phase
- Available in 1¾″ and 3½″ thicknesses (1½″ by special order), and depths from 3½″ to 24″; for 3½″ thickness or other depths, contact GP for availability
- Available in value lengths from 24′ to 48′ (lengths up to 60′ by special order)

GRADE	THICKNESS	DEPTH
2.0E	1¾″, 3½″	7¼″, 9¼″, 9½″, 11¼″, 11⅞″, 14″, 16″, 18″, 24″

Lengths: up to 60 feet.

Referenced dimensions are nominal and used for design purposes.

GP LAM® LVL BEARING DETAILS

- Confirm the actual required bearing is provided by a support that has adequate strength to carry the load.
- Minimum bearing length for GP Lam LVL beams and headers is 1½″ for end and 3″ for intermediate bearings. Size bearing for applied loads.
- For fastening recommendations for multiple-ply GP Lam LVL members, see pages 47-48.

BEAM-TO-BEAM CONNECTION

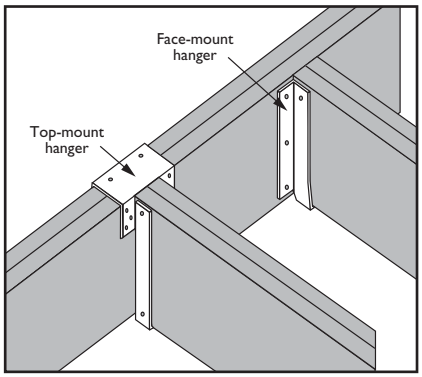

Hangers must be properly installed to achieve full capacity.

BEARING ON WOOD COLUMN

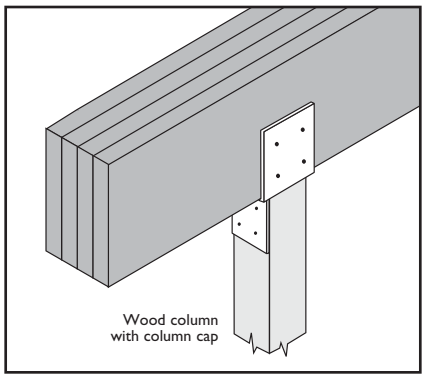

BEARING ON STEEL COLUMN

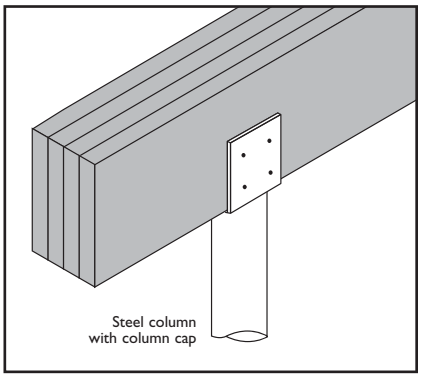

Where column caps are not used, side plates may be required for lateral restraint and/or load transfer. Consult designer of record. See tables on page 51 and 52 for column cap information.

POCKET IN CONCRETE OR MASONRY

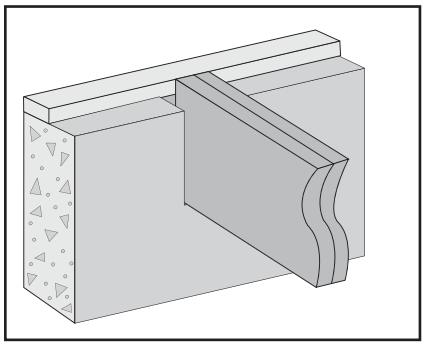

Prevent direct contact of GP Lam LVL with concrete or masonry, or protect per code. Consult local building code for additional requirements.

BEARING ON EXTERIOR WALL

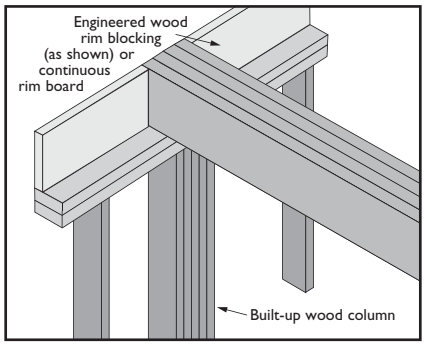

Consult local building code for requirements.

BEARING FOR DOOR OR WINDOW HEADER

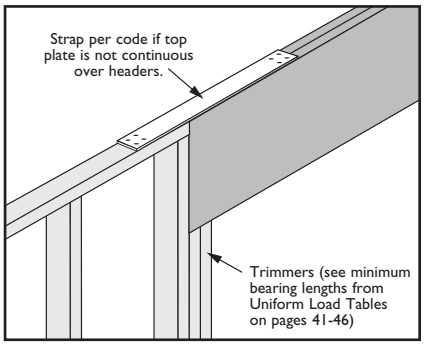

See "Bearing Length Requirements" on page 39.

LOW END HIP BEARING

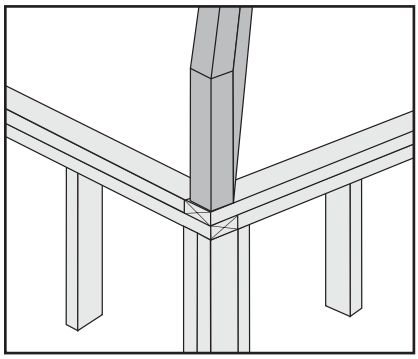

Hip beam must bear completely on plate or post. Seat cut must not extend past inside face of bearing.

HIGH END HIP BEARING

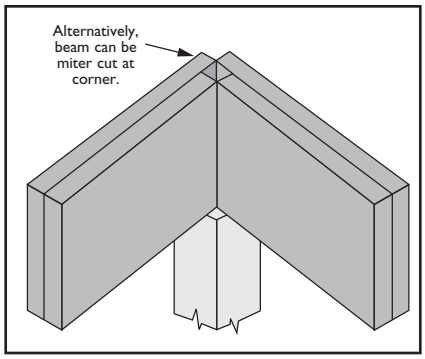

Hip beam must bear on post or in properly designed hanger or other connection.

SEAT CUT / NOTCHING

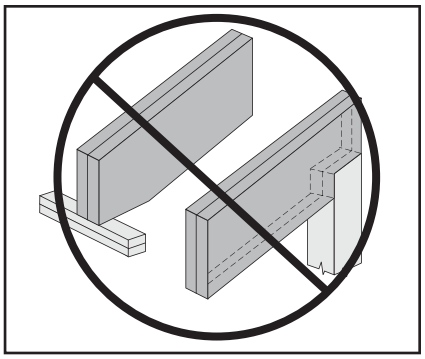

Seat cut must not extend past inside face of bearing. Do not notch beams at bearing.

GP LAM® LVL HANDLING & INSTALLATION

- GP Lam® LVL shall not be stored in direct contact with the ground and must be protected from weather. Provide air circulation under covering and around stacks of materials.
- Bundles must be stored level and must not be opened until time of installation.
- St ack and handle GP Lam LVL flatwise.
- Handlers and installers should use appropriate personal protective equipment such as gloves and goggles. An MSDS is available at www.buildgp.com.
- Engineered lumber must not be installed in direct contact with concrete or masonry construction or shall be protected per code and shall be used in covered, dry use conditions only (moisture content is less than 16%).
- Minimum bearing length for GP Lam LVL beams and headers: end bearing 1½″, intermediate bearing 3″. Size for applied loads.
- GP Lam LVL beams and headers must be restrained against rotation at ends and supports and the top (or compression edge) must be laterally supported by perpendicular framing or bracing at 24″ on-center or closer.
- 1¾″ GP Lam LVL beams deeper than 14″ must only be used in multiple-piece members.
- Nails installed in the narrow face of GP Lam LVL shall not be spaced closer than 4″ (10d common nails) or 3″ (8d common nails).
- Multiple piece GP Lam LVL may not be stagger-spliced as is sometimes done with dimension lumber. If the required length of a multiple-span beam exceeds the available length of the LVL, the LVL beams must be installed so as to butt together over a common bearing.
- GP Lam LVL is manufactured without camber or specific vertical orientation. It may be installed with the identifying stamps on the side faces reading right side up or upside down.
- Strength and stiffness properties of GP Lam LVL exceed those of typical dimension lumber. It may be possible to substitute GP Lam LVL for dimension lumber roof members in code-prescribed conventional light-frame construction, but design of conventional construction is beyond the scope of this product guide and of Georgia-Pacific Engineered Lumber Technical Services.
- When nail type is not specified in this guide, use common, box or sinker.
- To help safeguard the structural integrity of connections with preservative or fire-retardant treated wood, use connectors and hardware as required by code and type of treatment.

  As a minimum requirement, hot-dipped galvanized coated fasteners should conform to ASTM Standard A 153 and hot-dipped galvanized coated connectors should conform to ASTM Standard A 653 (Class G-185). In demanding applications, or in highly corrosive environments, stainless steel fasteners and connectors should be utilized and may, in fact, be required by building codes.

  Most commonly available electroplated galvanized fasteners do not have a sufficient coating of zinc and are not recommended. Aluminum should not be used in direct contact with preservative treated wood. Never mix galvanized steel with stainless steel in the same connection.

2.0E GP LAM LVL FLOOR BEAMS

This table shows the size (e.g.: 2–11¼″ = 2 plies of 1¾″x11¼″) of beams needed to support loads of one floor only, i.e., a second story floor or one story floor over a basement. (See drawing at right.)

When floor joists span continuously from wall to wall (not cut at beam) this table requires that "B" be not less than 45%, or greater than 55% of "A".

Example: If "A" = 32′, "B" must be between 14.4′ (32x.45) and 17.6′ (32x.55)

For non-conforming situations, use FASTBeam® analysis and selection software or contact Georgia-Pacific.

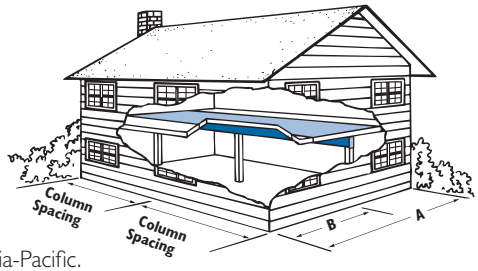

		COLUMN OR SUPPORT SPACING (CENTER-TO-CENTER)									
		11′	12′	13′	14′	15′	16′	17′	18′	19′	20′
TOTAL FLOOR JOIST SPAN "A"	24′	2-11¼″ 3-9¼″	2-11¼″ 3-9½″	2-11⅞″ 3-11¼″	2-14″ 3-11¼″	2-14″ 3-11⅞″	2-16″+ 3-14″	2-16″+ 3-14″	2-18″+ 3-16″	2-18″+ 3-16″	2-18″+ 3-16″
	28′	2-11¼″ 3-9¼″	2-11⅞″ 3-11¼″	2-14″+ 3-11¼″	2-14″+ 3-11⅞″	2-16″+ 3-14″	2-16″+ 3-14″	2-16″+ 3-14″	2-18″+ 3-16″	2-18″+ 3-16″	3-16″
	32′	2-11¼″	2-14″+ 3-11¼″	2-14″+ 3-11⅞″	2-14″+	2-16″+ 3-14″	2-16″+ 3-14″	2-18″+ 3-16″	2-18″+ 3-16″	3-16″+	3-18″+
	36′	2-11⅞″+ 3-11¼″	2-14″+ 3-11¼″	2-14″+ 3-11⅞″	2-16″+ 3-14″	2-16″+ 3-14″	2-18″+ 3-14″	3-16″+	3-16″+	3-18″+	3-18″+
+ See note 2.	40′	2-11⅞″+ 3-11¼″	2-14″+ 3-11¼″	2-14″+	2-16″+ 3-14″	2-16″+ 3-14″	3-16″+	3-16″+	3-16″+	3-18″+	3-18″+

NOTES:

1. Table is based on continuous floor joist span and simple or continuous beam span conditions. If floor joists are not continuous above the beam, take the sum of the joist spans then multiply by 0.8. This is the total floor joist span to consider.
2. Required end bearing length (based on 565 psi) is 3.0″ unless the subscript + is shown. In that case, 4.5″ is required.
3. At intermediate supports of continuous spans, use the following guidelines or refer to page 39.
   - 7½″ bearing length for beams requiring 3″ bearing at the beam ends
   - 10½″ bearing length for beams requiring 4½″ bearing at the beam ends
4. All headers require full-width bearing support, e.g., 2x6 for 5¼″, 3-ply members. The adequacy of supporting columns to be verified by others.
5. Table is based on residential floor loading of 40 psf live load and 12 psf dead load.
6. Live load reductions have been applied per IBC section 1607.9.1.
7. Deflection is limited to L/360 at live load and L/240 at total load.
8. For other uniform load conditions refer to pages 41-42.
9. A single 3½″ thick ply can be substituted for any two 1¾″ thick plies.
10. For multiple ply fasteners, see pages 47-48.

GP LAM®
LAMINATED VENEER LUMBER

2.0E GP LAM® LVL WINDOW AND PATIO DOOR HEADERS, 2-STORY

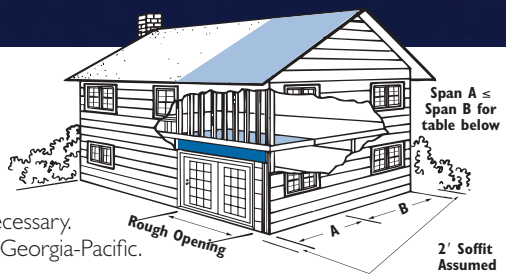

TWO-STORY APPLICATIONS

This table shows the size (e.g.: 2–11¼″ = 2 plies of 1¾″ x 11¼″) of beams needed to support the combined loads from a wall, second story floor (¼ of total floor joist span) and various roof truss spans with a 2′ soffit. If the soffit exceeds 2′, additional design is necessary. For non-conforming situations, use FASTBeam® analysis and selection software or contact Georgia-Pacific.

ROOF LOADING		SNOW (115%)										NON-SNOW (125%)									
		25 PSF LL + 20 PSF DL					40 PSF LL + 20 PSF DL					20 PSF LL + 15 PSF DL					20 PSF LL + 25 PSF DL				
ROUGH OPENING		6′	8′	9′	10′	12′	6′	8′	9′	10′	12′	6′	8′	9′	10′	12′	6′	8′	9′	10′	12′
ROOF TRUSS SPAN WITH 2′ SOFFIT ASSUMED	20′	1-9¼″ 2-7¼″	1-11¼″+ 2-9¼″ 3-7¼″	1-14″+ 2-11¼″ 3-9¼″	2-11¼″	2-16″ 3-14″	1-9¼″+ 2-7¼″	1-11⅞″+ 2-9¼″	2-11¼″ 3-9¼″	2-14″ 3-11¼″	2-16″+ 3-14″	1-7¼″	1-11¼″ 2-9¼″ 3-7¼″	1-14″+ 2-9¼″ 3-9¼″	1-14″+ 2-11¼″ 3-11⅞″	2-14″	1-9¼″ 2-7¼″ 3-7¼″	1-11¼″+ 2-9¼″ 3-9¼″	1-14″+ 2-11¼″	2-11¼″	2-16″ 3-14″
	24′	1-9¼″ 2-7¼″	1-11⅞″+ 2-9¼″	1-14″+ 2-11¼″ 3-9¼″	2-11⅞″ 3-11¼″	2-16″ 3-14″	1-9¼″+ 2-7¼″	2-9½″ 3-9¼″	2-11¼″ 3-9½″	2-14″ 3-11¼″	2-18″+ 3-14″	1-9¼″ 2-7¼″	1-11¼″+ 2-9¼″ 3-7¼″	1-14″+ 2-11¼″ 3-9¼″	2-11¼″	2-16″ 3-14″	1-9¼″ 2-7¼″	1-11⅞″+ 2-9¼″	1-14″+ 2-11¼″ 3-9¼″	2-11⅞″ 3-11¼″	2-16″ 3-14″
	28′	1-9¼″+ 2-7¼″	2-9¼″	2-11¼″ 3-9½″	2-14″ 3-11¼″	2-16″+ 3-14″	1-9½″+ 2-7¼″	2-11¼″ 3-9¼″	2-11⅞″+ 3-11¼″	2-14″+ 3-11⅞″	2-18″+ 3-16″	1-9¼″ 2-7¼″	1-11⅞″+ 2-9¼″	1-14″+ 2-11¼″ 3-9¼″	2-11⅞″ 3-11¼″	2-16″ 3-14″	1-9¼″+ 2-7¼″	2-9¼″	2-11¼″ 3-9½″	2-14″ 3-11¼″	2-16″+ 3-14″
	32′	1-9¼″+ 2-7¼″	2-11¼″ 3-9¼″	2-11¼″	2-14″+ 3-11¼″	2-18″+ 3-16″	2-7¼″	2-11¼″+ 3-9¼″	2-14″+ 3-11¼″	2-16″+ 3-11⅞″	3-16″+	1-9¼″+ 2-7¼″	1-14″+ 2-9¼″	2-11¼″ 3-9¼″	2-14″ 3-11¼″	1-9¼″+ 2-16″+ 3-14″	2-7¼″	2-11¼″ 3-9¼″	2-11¼″	2-14″+ 3-11¼″	2-18″+ 3-16″
+ See note 1.	36′	1-9½″+ 2-7¼″	2-11¼″ 3-9¼″	2-11⅞″+ 3-11¼″	2-14″+ 3-11⅞″	2-18″+ 3-16″	2-9¼″ 3-7¼″	2-11¼″+ 3-9¼″	2-14″+ 3-11¼″	2-16″+ 3-14″	3-16″+	1-9¼″+ 2-7¼″	2-9½″ 3-9¼″	2-11¼″	2-14″+ 3-11¼″	1-9¼″+ 2-18″+ 3-14″	2-7¼″	2-11¼″ 3-9¼″	2-11⅞″+ 3-11¼″	2-14″+ 3-11⅞″	2-18″+ 3-16″

NOTES:

1. Required end bearing length (based on 625 psi) is 3.0″ unless the subscript + is shown. In that case, 4.5″ is required.
2. All headers require full-width bearing support, e.g., 2×6 for 5¼″, 3-ply members. The adequacy of supporting columns to be verified by others.
3. Table is based on residential floor loading of 40 psf live load and 12 psf dead load and exterior wall weight of 100 plf.
4. A beam line supporting the center of the second floor is assumed.
5. Deflection is limited to L/360 and the lesser of L/240 or 5/16″ at total load.
6. Roof live and dead loads shown are applied vertically to the horizontal projection.
7. When using a single ply 1¾″, consider the effect on hanger capacity, and the available bearing surface the LVL provides to other framing elements.
8. A single 3½″ thick ply can be substituted for any two 1¾″ thick plies.
9. For multiple ply fasteners, see pages 47-48.
10. This table does not address a brick loaded condition.

2.0E GP LAM LVL GARAGE DOOR HEADERS, 2-STORY

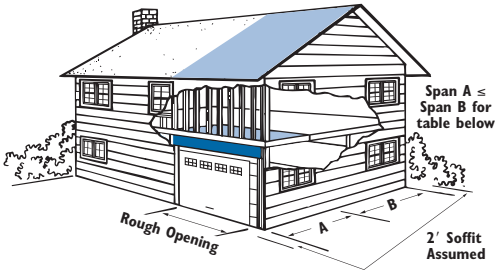

TWO-STORY APPLICATIONS

This table shows the size (e.g.: 2–11¼″ = 2 plies of 1¾″ x 11¼″) of beams needed to support the combined loads from a wall, second story floor (¼ of total floor joist span) and various roof truss spans with a 28 soffit. If the soffit exceeds 2′, additional design is necessary. For non-conforming situations, use FASTBeam® analysis and selection software or contact Georgia-Pacific.

ROOF LOADING		SNOW (115%)									NON-SNOW (125%)								
		25 PSF LL + 20 PSF DL			30 PSF LL + 20 PSF DL			40 PSF LL + 20 PSF DL			20 PSF LL + 15 PSF DL			20 PSF LL + 20 PSF DL			20 PSF LL + 25 PSF DL		
ROUGH OPENING		9′3″	16′3″	18′3″	9′3″	16′3″	18′3″	9′3″	16′3″	18′3″	9′3″	16′3″	18′3″	9′3″	16′3″	18′3″	9′3″	16′3″	18′3″
ROOF TRUSS SPAN WITH 2′ SOFFIT ASSUMED	20′	1-11⅞″+ 2-9¼″	2-16″+ 3-14″	2-18″+ 3-16″	1-11⅞″+ 2-9¼″	2-16″+ 3-14″	2-18″+ 3-16″	2-9½″ 3-9¼″	2-18″+ 3-14″	3-16″+	1-11¼″+ 2-9¼″ 3-7¼″	2-16″ 3-14″	2-18″ + 3-16″	1-11¼″+ 2-9¼″	2-16″+ 3-14″	2-18″ + 3-16″	1-11⅞″+ 2-9¼″	2-16″ + 3-14″	2-18″ + 3-16″
	24′	2-9¼″	2-18″+ 3-14″	3-16″	2-9½″ 3-9¼″	2-18″+ 3-16″	3-16″+	2-11¼″ 3-9¼″	3-16″+	3-18″+	1-11⅞″+ 2-9¼″	2-16″+ 3-14″	2-18″+ 3-16″	1-11⅞″+ 2-9¼″	2-16″+ 3-14″	2-18″ + 3-16″	2-9¼″	2-18″+ 3-14″	3-16″
	28′	2-11¼″ 3-9¼″	3-16″+	3-18″+	2-11¼″ 3-9¼″	3-16″+	3-18″+	2-11¼″+ 3-9¼″	3-16″+	3-18″+	2-9¼″	2-16″+ 3-14″	2-18″+ 3-16″	2-9½″ 3-9¼″	2-18″+ 3-16″	3-16″+	2-11¼″ 3-9¼″	3-16″+	3-18″+
	32′	2-11¼″ 3-9¼″	3-16″+	3-18″+	2-11¼″+ 3-9¼″	3-16″+	3-18″+	2-11¼″+ 3-9¼″	3-18″+		2-9½″ 3-9¼″	2-18″+ 3-16″	3-18″+	2-11¼″ 3-9¼″	3-16″+	3-18″+	2-11¼″ 3-9¼″	3-16″+	3-18″+
+ See note 1.	36′	2-11¼″+ 3-9¼″	3-16″+	3-18″+	2-11¼″+ 3-9¼″	3-18″+		2-11¼″+			2-11¼″ 3-9¼″	3-16″+	3-18″+	2-11¼″ 3-9¼″	3-16″+	3-18″+	2-11¼″+ 3-9¼″	3-16″+	3-18″+

NOTES:

1. Required end bearing length (based on 625 psi) is 3.0″ unless the subscript + is shown. In that case, 4.5″ is required.
2. All headers require full-width bearing support, e.g., 2×6 for 5¼″, 3-ply members. The adequacy of supporting columns to be verified by others.
3. Table is based on residential floor loading of 40 psf live load and 12 psf dead load and exterior wall weight of 100 plf.
4. A beam line supporting the center of the second floor is assumed.
5. Deflection is limited to L/360 at live load and L/240 at total load.
6. Roof live and dead loads shown are applied vertically to the horizontal projection.
7. When using a single ply 1¾″, consider the effect on hanger capacity, and the available bearing surface the LVL provides to other framing elements.
8. A single 3½″ thick ply can be substituted for any two 1¾″ thick plies.
9. For multiple ply fasteners, see pages 47-48.
10. This table does not address a brick loaded condition.

2.0E GP LAM® LVL WINDOW AND PATIO DOOR HEADERS, ROOF ONLY

ROOF APPLICATIONS

This table shows the size (e.g.: 2–11¼″ = 2 plies of 1¾″ x 11¼″) of headers needed to support various roof truss spans with 2′ soffit. If the soffit is greater than 2′, additional design is necessary. For non-conforming situations, use FASTBeam® analysis and selection software or contact Georgia-Pacific.

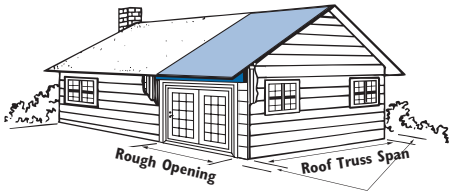

2′ Soffit Assumed

ROOF LOADING		SNOW (115%)										NON-SNOW (125%)									
		25 PSF LL + 20 PSF DL					40 PSF LL + 20 PSF DL					20 PSF LL + 15 PSF DL					20 PSF LL + 25 PSF DL				
ROUGH OPENING		6′	8′	9′	10′	12′	6′	8′	9′	10′	12′	6′	8′	9′	10′	12′	6′	8′	9′	10′	12′
ROOF TRUSS SPAN WITH 2′ SOFFIT ASSUMED	20′	1-7¼″	1-9¼″ 2-7¼″	1-11¼″ 2-9¼″ 3-7¼″	1-14″ 2-9½″ 3-9¼″	2-14″ 3-11¼″	1-7¼″	1-11¼″ 2-9¼″ 3-7¼″	1-11⅞″+ 2-9¼″	1-14″+ 2-11¼″ 3-9¼″	2-14″ 3-11⅞″	1-7¼″	1-9¼″ 2-7¼″	1-91/2″ 2-9¼″ 3-7¼″	1-11¼″ 2-9¼″	1-14″ 2-11¼″ 3-9½″	1-7¼″	1-9¼″ 2-7¼″	1-11¼″ 2-9¼″ 3-7¼″	1-14″ 2-9½″ 3-9¼″	2-14″ 3-11¼″
	24′	1-7¼″	1-9½″ 2-9¼″ 3-7¼″	1-11¼″ 2-9¼″	1-14″ 2-11¼″ 3-9¼″	2-14″ 3-11¼″	1-7¼″	1-11¼″+ 2-9¼″ 3-7¼″	1-14″+ 2-9½″ 3-9¼″	2-11¼″ 3-9½″	2-14″	1-7¼″	1-9¼″ 2-7¼″	1-11¼″ 2-9¼″ 3-7¼″	1-11⅞″ 2-9¼″	2-11⅞″ 3-11¼″	1-7¼″	1-9½″ 2-9¼″ 3-7¼″	1-11¼″ 2-9¼″	1-14″ 2-11¼″ 3-9¼″	2-14″ 3-11¼″
	28′	1-7¼″	1-11¼″ 2-9¼″ 3-7¼″	1-11⅞″+ 2-9¼″	1-14″+ 2-11¼″ 3-9¼″	2-14″ 3-11⅞″	1-9¼″ 2-7¼″	1-11¼″+ 2-9¼″	1-14″+ 2-11¼″ 3-9¼″	2-11⅞″ 3-11¼″	2-16″ 3-14″	1-7¼″	1-9¼″ 2-7¼″	1-11¼″ 2-9¼″ 3-7¼″	1-14″ 2-9½″ 3-9¼″	2-14″ 3-11¼″	1-7¼″	1-11¼″ 2-9¼″ 3-7¼″	1-11⅞″+ 2-9¼″	1-14″+ 2-11¼″ 3-9¼″	2-14″ 3-11⅞″
	32′	1-7¼″	1-11¼″+ 2-9¼″ 3-7¼″	1-14″+ 2-9½″ 3-9¼″	2-11¼″ 3-9½″	2-14″	1-9¼″+ 2-7¼″	1-11⅞″+ 2-9¼″	2-11¼″ 3-9¼″	2-14″ 3-11¼″	2-16″+ 3-14″	1-7¼″	1-9½″ 2-9¼″ 3-7¼″	1-11¼″ 2-9¼″	1-14″ 2-11¼″ 3-9¼″	2-14″ 3-11¼″	1-7¼″	1-11¼″+ 2-9¼″ 3-7¼″	1-14″+ 2-9½″ 3-9¼″	2-11¼″ 3-9½″	2-14″
+ See note 1.	36′	1-9¼″ 2-7¼″	1-11¼″+ 2-9¼″ 3-7¼″	1-14″+ 2-11¼″ 3-9¼″	2-11¼″	2-16″ 3-14″	1-9¼″+ 2-7¼″	2-9¼″	2-11¼″ 3-9½″	2-14″ 3-11¼″	2-18″+ 3-14″	1-7¼″	1-11¼″ 2-9¼″ 3-7¼″	1-11⅞″ 2-9¼″	1-14″+ 2-11¼″ 3-9¼″	2-14″ 3-11⅞″	1-9¼″ 2-7¼″	1-11¼″+ 2-9¼″ 3-7¼″	1-14″+ 2-11¼″ 3-9¼	2-11¼″	2-16″ 3-14″

NOTES:

1. Required bearing length (based on 625 psi) is 3.0″ unless the subscript + is shown. In that case, 4.5″ is required.
2. All headers require full-width bearing support, e.g., 2x6 for 5¼″, 3-ply members. The adequacy of supporting columns to be verified by others.
3. Deflection is limited to L/240 at live load and the lesser of L/180 or 5/16″ at total load.
4. Roof live and dead loads shown are applied vertically to the horizontal projection.
5. When using a single ply 1¾″, consider the effect on hanger capacity, and the available bearing surface the LVL provides to other framing elements.
6. A single 3½″ thick ply can be substituted for any two 1¾″ thick plies.
7. For multiple ply fasteners, see pages 47-48.

2.0E GP LAM LVL GARAGE DOOR HEADERS, ROOF ONLY

ROOF APPLICATIONS

This table shows the size (e.g.: 2–11¼″ = 2 plies of 1¾″ x 11¼″) of headers needed to support various roof truss spans with 2′ soffit. If the soffit is greater than 2′, additional design is necessary. For non-conforming situations, use FASTBeam® analysis and selection software or contact Georgia-Pacific.

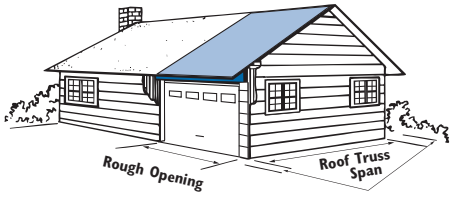

2′ Soffit Assumed

ROOF LOADING		SNOW (115%)									NON-SNOW (125%)								
		25 PSF LL + 20 PSF DL			30 PSF LL + 20 PSF DL			40 PSF LL + 20 PSF DL			20 PSF LL + 15 PSF DL			20 PSF LL + 20 PSF DL			20 PSF LL + 25 PSF DL		
ROUGH OPENING		9′3″	16′3″	18′3″	9′3″	16′3″	18′3″	9′3″	16′3″	18′3″	9′3″	16′3″	18′3″	9′3″	16′3″	18′3″	9′3″	16′3″	18′3″
ROOF TRUSS SPAN WITH 2′ SOFFIT ASSUMED	20′	1-9¼″ 2-7¼″	2-11⅞″ 3-11¼″	2-14″ 3-11¼″	1-9¼″ 2-7¼″	2-14″ 3-11¼″	2-14″ 3-11⅞″	1-11¼″+ 2-9¼″ 3-7¼″	2-14″ 3-11¼″	2-16″+ 3-14″	1-9¼″ 2-7¼″	1-14″+ 2-11¼″ 3-9¼″	2-11⅞″ 3-11¼″	1-9¼″ 2-7¼″	2-11¼″	2-14″ 3-11¼″	1-9¼″ 2-7¼″	2-11⅞″ 3-11¼″	2-14″ 3-11¼″
	24′	1-9½″ 2-7¼″	2-14″ 3-11¼″	2-14″ 3-11⅞″	1-11¼″+ 2-7¼″	2-14″ 3-11¼″	2-16″+ 3-14″	1-11¼″+ 2-9¼″ 3-7¼″	2-14″+ 3-11⅞″	2-16″+ 3-14″	1-9¼″ 2-7¼″	2-11¼″	2-14″ 3-11¼″	1-9¼″ 2-7¼″	2-11⅞″ 3-11¼″	2-14″ 3-11⅞″	1-9¼″ 2-7¼″	2-14″ 3-11¼″	2-14″ 3-11⅞″
	28′	1-11¼″+ 2-9¼″ 3-7¼″	2-14″ 3-11¼″	2-16″+ 3-14″	1-11¼″+ 2-9¼″ 3-7¼″	2-14″+ 3-11⅞″	2-16″+ 3-14″	1-11⅞″+ 2-9¼″ 3-7¼″	2-16″+ 3-14″	2-18″+ 3-14″	1-9¼″ 2-7¼″	2-11⅞″ 3-11¼″	2-14″ 3-11⅞″	1-9¼″ 2-7¼″	2-14″ 3-11¼″	2-14″ 3-11⅞″	1-11¼″+ 2-9¼″ 3-7¼″	2-14″ 3-11¼″	2-16″+ 3-14″
	32′	1-11¼″+ 2-9¼″ 3-7¼″	2-14″+ 3-11⅞″	2-16″+ 3-14″	1-11⅞″+ 2-9¼″ 3-7¼″	2-16″+ 3-14″	2-16″+ 3-14″	2-9¼″	2-16″+ 3-14″	3-16″+	1-9¼″ 2-7¼″	2-14″ 3-11¼″	2-14″ 3-11⅞″	1-11¼″+ 2-9¼″ 3-7¼″	2-14″ 3-11¼″	2-16″+ 3-14″	1-11¼″+ 2-9¼″ 3-7¼″	2-14″+ 3-11⅞″	2-16″+ 3-14″
+ See note 1.	36′	1-11⅞″+ 2-9¼″ 3-71/4″	2-16″+ 3-14″	2-16″+ 3-14″	1-14″+ 2-9¼″ 3-7¼″	2-16″+ 3-14″	2-18″+ 3-14″	2-9¼″	3-14″+	3-16″+	1-91/2″+ 2-7¼″	2-14″ 3-11¼″	2-16″+ 3-14″	1-11¼″+ 2-9¼″ 3-7¼″	2-14″+ 3-11⅞″	2-16″+ 3-14″	1-11¼″+ 2-9¼″ 3-7¼″	2-14″+	2-16″+ 3-14″

NOTES:

1. Required bearing length (based on 625 psi) is 3.0″ unless the subscript + is shown. In that case, 4.5″ is required.
2. All headers require full-width bearing support, e.g., 2x6 for 5¼″, 3-ply members. The adequacy of supporting columns to be verified by others.
3. Deflection is limited to L/240 at live load and L/180 at total load.
4. Roof live and dead loads shown are applied vertically to the horizontal projection.
5. When using a single ply 1¾″, consider the effect on hanger capacity, and the available bearing surface the LVL provides to other framing elements.
6. A single 3½″ thick ply can be substituted for any two 1¾″ thick plies.
7. For multiple ply fasteners, see pages 47-48.

GP LAM®
LAMINATED VENEER LUMBER

GP LAM® LVL ROOF HIP AND VALLEY BEAMS

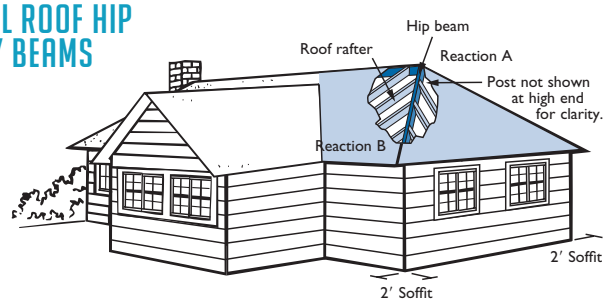

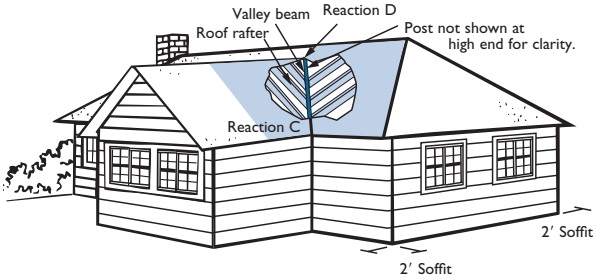

2.0E GP LAM LVL

LONGEST HORIZONTAL ROOF RAFTER SPAN (L)		ROOF LOADING SNOW (115%)								
		20 PSF LL + 13 PSF DL			30 PSF LL + 13 PSF DL			40 PSF LL + 13 PSF DL		
		ROOF SLOPE			ROOF SLOPE			ROOF SLOPE		
		up to 4/12	up to 8/12	up to 12/12	up to 4/12	up to 8/12	up to 12/12	up to 4/12	up to 8/12	up to 12/12
12′	No. of 1¾″ plies - Beam Depth	1 - 11¼″	1 - 11¼″	1 - 11¼″	1 - 11¼″	1 - 11¼″	1 - 11⅞″	1 - 11¼″	1 - 11⅞″	1 - 14″
		2 - 9¼″	2 - 9¼″	2 - 9¼″	2 - 9¼″	2 - 9¼″	2 - 9½″	2 - 9¼″	2 - 9½″	2 - 11¼″
							3 - 9¼″		3 - 9¼″	3 - 9¼″
	Order Length	22′	24′	26′	22′	24′	26′	22′	24′	26′
	Max. React. A&C (lbs)	1881	2049	2326	2401	2570	2846	2921	3089	3366
	Max. React. B&D (lbs)	1063	1155	1306	1343	1435	1586	1623	1715	1866
14′	No. of 1¾″ plies - Beam Depth	1 - 11⅞″	1 - 14″	1 - 14″	1 - 14″	1 - 14″	2 - 11⅞″	1 - 14″	2 - 11⅞″	2 - 14″
		2 - 9½″	2 - 11¼″	2 - 11¼″	2 - 11¼″	2 - 11¼″	3 - 11¼″	2 - 11¼″	3 - 11¼″	3 - 11¼″
		3 - 9¼″	3 - 9¼″	3 - 9½″	3 - 9¼″	3 - 9½″	4 - 9¼″	4 - 9¼″	4 - 9¼″	
	Order Length	24′	26′	30′	24′	26′	30′	24′	26′	30′
	Max. React. A&C (lbs)	2491	2716	3090	3184	3414	3830	3920	4149	4568
	Max. React. B&D (lbs)	1377	1498	1701	1744	1869	2114	2153	2278	2525
16′	No. of 1¾″ plies - Beam Depth	2 - 11⅞″	2 - 14″	2 - 14″	2 - 14″	2 - 14″	2 - 14″	2 - 14″	2 - 14″	2 - 16″
		3 - 11¼″	3 - 11¼″	3 - 11⅞″	3 - 11¼″	3 - 11⅞″		3 - 11⅞″		3 - 14″
		4 - 9¼″		4 - 11¼″		4 - 11¼″	4 - 11¼″	4 - 11¼″	4 - 11¼″	4 - 11⅞″
	Order Length	28′	30′	34′	28′	30′	34′	28′	30′	34′
	Max. React. A&C (lbs)	3239	3580	4067	4176	4473	4961	5069	5367	5870
	Max. React. B&D (lbs)	1785	1989	2253	2295	2456	2720	2761	2923	3202
18′	No. of 1¾″ plies - Beam Depth	2 - 14″	2 - 14″	2 - 16″	2 - 16″	2 - 16″	2 - 18″	2 - 16″	2 - 18″	2 - 18″
		3 - 11⅞″		3 - 14″	3 - 14″	3 - 14″	3 - 16″	3 - 14″	3 - 16″	3 - 16″
		4 - 11¼″	4 - 11¼″		4 - 11⅞″		4 - 14″		4 - 14″	4 - 14″
	Order Length	30′	32′	36′	30′	32′	36′	30′	32′	36′
	Max. React. A&C (lbs)	4084	4457	5144	5219	5647	6265	6390	6767	7385
	Max. React. B&D (lbs)	2244	2444	2848	2839	3094	3428	3470	3674	4008
20′	No. of 1¾″ plies - Beam Depth	2 - 16″	2 - 18″	2 - 18″	2 - 18″	2 - 18″	2 - 24″	2 - 18″	2 - 24″	2 - 24″
		3 - 14″	3 - 16″	3 - 16″	3 - 16″	3 - 16″	3 - 18″	3 - 16″	3 - 18″	3 - 18″
			4 - 14″		4 - 14″	4 - 14″	4 - 16″		4 - 16″	4 - 16″
	Order Length	34′	36′	40′	34′	36′	40′	34′	36′	40′
	Max. React. A&C (lbs)	5051	5511	6329	6424	6885	7702	7850	8316	9075
	Max. React. B&D (lbs)	2778	3026	3494	3485	3733	4201	4244	4497	4907
22′	No. of 1¾″ plies - Beam Depth	2 - 18″	2 - 24″	2 - 24″	2 - 24″	2 - 24″	—	2 - 24″	—	—
		3 - 16″	3 - 18″	3 - 18″	3 - 18″	3 - 18″	3 - 24″	3 - 18″	3 - 24″	—
		4 - 14″	4 - 16″		4 - 16″	4 - 16″	4 - 18″		4 - 18″	—
	Order Length	36′	40′	44′	36′	40′	44′	36′	40′	—
	Max. React. A&C (lbs)	6041	6657	7639	7753	8311	9292	9465	10028	—
	Max. React. B&D (lbs)	3292	3650	4209	4197	4497	5056	5102	5407	—
24′	No. of 1¾″ plies - Beam Depth	2 - 24″	—	—	—	—	—	—	—	—
		3 - 18″	3 - 24″	—	3 - 24″	3 - 24″	—	—	—	—
		4 - 16″	4 - 18″	—	4 - 18″	4 - 18″	—	—	—	—
	Order Length	40′	42′	—	40′	42′	—	—	—	—
	Max. React. A&C (lbs)	7187	7915	—	9211	9875	—	—	—	—
	Max. React. B&D (lbs)	3915	4336	—	4979	5336	—	—	—	—

NOTES:

1. 2′-0″ maximum roof overhang assumed.
2. Provide posts or wall at both ends to support reactions. Provide 5″ minimum bearing in the direction of the hip or valley at each end based on Douglas Fir-Larch or Southern Pine post or plate material. (For example, a 2x4 wall provides 5″ minimum bearing for a hip or valley rafter framing at a 45 degree angle to the wall.)
3. The building designer must consider thrust resistant connections at bearing locations.
4. For non-equal roof slopes, use the longest horizontal roof rafter span (L) and the greatest roof slope.
5. Table is based on triangular loading applied to the hip or valley member. Live load is calculated as applied vertically to the horizontal projection of the rafter and dead load is calculated along the rafter length.
6. Size is based on uniform roof snow applications with a load duration factor of 115% and deflection criterion of L/240 live load and L/180 total load.
7. Refer to pages 47-48 for fastening recommendations for multiple-ply members. Use the longest horizontal roof rafter span (L) to determine span-carried length for uniform loading.
8. Reactions shown include heaviest beam weight selected for load and slope conditions.
9. A structural ridge beam is assumed.
10. A single 3½″ thick ply can be substituted for any two 1¾″ thick plies.
11. Codes require that hip and valley beam depths be greater than or equal to the cut end of the rafter.

GP LAM® LVL BEARING LENGTH REQUIREMENTS

REACTION (LBS)	SUPPORT MATERIAL															
	SPF SOUTH (335 PSI)				HEM-FIR (405 PSI)				SOUTHERN PINE (565 PSI)				2.0E GP LAM LVL (845 PSI)			
	BEAM THICKNESS				BEAM THICKNESS				BEAM THICKNESS				BEAM THICKNESS			
	1¾″	3½″	5¼″	7″	1¾″	3½″	5¼″	7″	1¾″	3½″	5¼″	7″	1¾″	3½″	5¼″	7″
1,000	1¾″	1½″	1½″	1½″	1½″	1½″	1½″	1½″	1½″	1½″	1½″	1½″	1½″	1½″	1½″	1½″
2,000	3½″	1¾″	1½″	1½″	3″	1½″	1½″	1½″	2¼″	1½″	1½″	1½″	1½″	1½″	1½″	1½″
3,000	5¼″	2¾″	1¾″	1½″	4¼″	2¼″	1½″	1½″	3¼″	1¾″	1½″	1½″	2¼″	1½″	1½″	1½″
4,000	7″	3½″	2½″	1¾″	5¾″	3″	2″	1½″	4¼″	2¼″	1½″	1½″	2¾″	1½″	1½″	1½″
5,000	8¾″	4½″	3″	2¼″	7¼″	3¾″	2½″	2″	5¼″	2¾″	1¾″	1½″	3½″	1¾″	1½″	1½″
6,000	10¼″	5¼″	3½″	2¾″	8½″	4¼″	3″	2¼″	6¼″	3¼″	2¼″	1¾″	4¼″	2¼″	1½″	1½″
7,000		6″	4″	3″	10″	5″	3½″	2½″	7¼″	3¾″	2½″	2″	4¾″	2½″	1¾″	1½″
8,000		7″	4¾″	3½″		5¾″	4″	3″	8¼″	4¼″	2¾″	2¼″	5½″	2¾″	2″	1½″
9,000		7¾″	5¼″	4″		6½″	4¼″	3¼″	9¼″	4¾″	3¼″	2½″	6¼″	3¼″	2¼″	1¾″
10,000		8¾″	5¾″	4½″		7¼″	4¾″	3¾″	10¼″	5¼″	3½″	2¾″	7″	3½″	2½″	1¾″
11,000		9½″	6½″	4¾″		8″	5¼″	4″		5¾″	3¾″	3″	7½″	3¾″	2½″	2″
12,000		10¼″	7″	5¼″		8½″	5¾″	4¼″		6¼″	4¼″	3¼″	8¼″	4¼″	2¾″	2¼″
13,000			7½″	5¾″		9¼″	6¼″	4¾″		6¾″	4½″	3½″	9″	4½″	3″	2¼″
14,000			8″	6″		10″	6¾″	5″		7¼″	4¾″	3¾″	9½″	4¾″	3¼″	2½″
15,000			8¾″	6½″			7¼″	5½″		7¾″	5¼″	4″	10¼″	5¼″	3½″	2¾″
16,000			9¼″	7″			7¾″	5¾″		8¼″	5½″	4¼″		5½″	3¾″	2¾″
17,000			9¾″	7¼″			8″	6″		8¾″	5¾″	4½″		5¾″	4″	3″
18,000			10¼″	7¾″			8½″	6½″		9¼″	6¼″	4¾″		6¼″	4¼″	3¼″
19,000				8¼″			9″	6¾″		9¾″	6½″	5″		6½″	4½″	3¼″
20,000				8¾″			9½″	7¼″		10¼″	6¾″	5¼″		7″	4¾″	3½″
21,000				9″			10″	7½″			7¼″	5½″		7¼″	4¾″	3¾″
22,000				9½″			10½″	8″			7½″	5¾″		7½″	5″	3¾″
23,000				10″				8¼″			8″	6″		8″	5¼″	4″
24,000				10¼″				8½″			8¼″	6¼″		8¼″	5½″	4¼″
25,000								9″			8½″	6½″		8½″	5¾″	4¼″

NOTES:

1. Minimum required bearing length is 1½″ for end bearings and 3″ for intermediate bearings.
2. Bearing across full width of beam or header is required.
3. Table is based on moisture content being less than 16% for engineered lumber and not exceeding 19% for lumber.
4. Confirmation of structural adequacy of supporting member is required.
5. GP Lam LVL beams and headers must be restrained against rotation at ends and supports.
6. When plate material is of **Southern Pine graded non-dense** or of **SPF**, use bearing lengths shown for Hem-Fir .
7. When plate material is of **Douglas Fir-Larch** or **Douglas Fir-Larch (N)**, use bearing lengths shown for Southern Pine.
8. When GP Lam LVL rests **on steel or in a hanger**, use bearing lengths shown for GP Lam LVL.
9. No reduction in bearing length (no increase in bearing stress, $F_{c\perp}$) is allowed for duration of load.
10. For non-conforming situations, use FASTBeam® analysis and selection software or contact Georgia-Pacific.

ALLOWABLE HORIZONTAL HOLES IN GP LAM® LVL

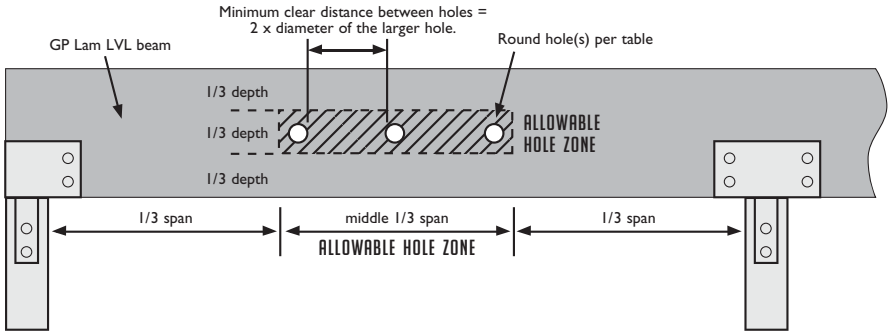

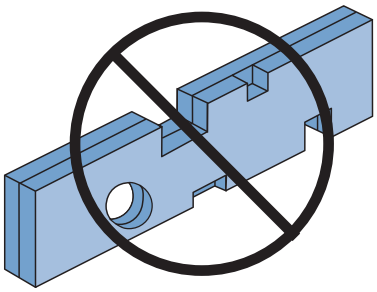

Do not notch, drill or cut GP Lam LVL except as shown in this publication.

NOTES:

1. Hole(s) must be located completely in the allowable hole zone.
2. No rectangular holes are allowed.
3. No more than three holes allowed per span.
4. Table is valid for single and multiple span uniformly loaded beams only. Table is not valid for cantilever sections.
5. Hole location, clearance and the effects of beam deflection should be considered to avoid problems with piping.

ALLOWABLE HOLE SIZES

BEAM DEPTH	MAXIMUM ROUND HOLE DIAMETER
3½"-7"	¾"
7¼"-9¼"	1½"
9½"-16"	2"
deeper than 16"	3"

USING ALLOWABLE UNIFORM FLOOR AND ROOF LOAD TABLES (Pages 41-46)

1. **Tables are based on uniform loads, the more restrictive of simple or continuous spans (measured center-to-center), and dry-use conditions (moisture content less than 16%).** Loads shown can be applied to the beam in addition to its own weight. For other loads or span configurations, use FASTBeam® analysis and selection software or contact your Georgia-Pacific representative.
2. Beam thickness is the net thickness of the beam. A single 3½" thick ply can be substituted for any two 1¾" thick plies. See pages 47-48 for multiple-ply member connection details.
3. To size a beam it is necessary to check both live load and total load. Selected beam must work in both rows. When no live load is shown, total load will control, unless floor live load deflections other than L/360 are checked per note 4.
4. For floor live load deflection limits of L/480 or L/600, multiply the value in the floor 'LL' row (or 'TL' when 'LL' is not shown) by 0.75 or 0.60 respectively.
5. To size a member for a span not shown, use capacities for the next larger span shown (example: for 7′ span, use values shown for 8′ span).
6. Verify deflection limits with local building code requirements.
7. Bearing across full width of beam is assumed.
8. Assumes 565 psi bearing stress limited by Douglas Fir, Southern Yellow Pine or other dense supporting material. For SPF or other less dense materials, either double the bearing length shown or refer to Bearing Length Requirements on page 39.
9. Bearing length may be adjusted if a beam is not fully loaded. For example, if 4.2" of bearing is required for a beam with maximum total load capacity of 1000 PLF yet the total design load is only 700 PLF the bearing length may be adjusted as follows: 700/1000 x 4.2 = 2.94" minimum (use 2 cripples for 3"). In no case may end bearing length be less than 1½" or intermediate bearing length less than 3".
10. Provide lateral support at bearing points, and continuous lateral support along the top (or compression edge) of beam.
11. **1¾" thick beams with depth greater than 14" must only be used in multiple-ply members.**
12. For 3-ply 1¾" (5¼") or 4-ply 1¾" (7") GP Lam LVL, use 1¾" table and multiply by 3 or 4 respectively.
13. Roof surface must slope a minimum of ¼/12 or as required for drainage.

EXAMPLE:

Select a 2.0E GP Lam LVL beam to carry 520 PLF live load + 200 PLF dead load. Beam supports both floor and roof, and spans 10′.

When a beam carries floor and roof, use tables for floor loads; these tables are based on more stringent criteria than those used for roof loads. Use the table titled Floor 100%, on pages 41-42. Adding 520 PLF and 200 PLF gives a total load of 720 PLF. Find 10′ in the left-most column. To the right are three rows showing Live Load L/360, Total Load and Minimum End and Minimum Interior Bearing requirements in inches. In the row marked Total Load, move to the right to locate a total load of at least 720 PLF. 1¾" x 11⅞" GP Lam LVL Beam can carry 745 PLF total load. Check live load capacity. 1¾" x 11⅞" can carry 629 PLF live load, so live load capacity is also adequate. Note required end bearing length is 3.8" and 9.5" for interior bearing of multiple spans. (See Note 9 above)

If less bearing length or a depth less than 11⅞" is desired, check the capacity of 3½" LVL beams. In the row marked Total Load, move farther to the right to locate a total load of at least 720 PLF. A 3½" wide x 9¼" deep member can carry 931 PLF total load. Check that live load capacity is at least 520 PLF. 3½" x 9¼" beams can carry 627 PLF, which is sufficient. Use 3½" x 9¼" deep. Required end bearing is 2.4" and 5.9" is required for interior bearing of multiple spans.

ALLOWABLE UNIFORM FLOOR LOADS (PLF) – 100%

(Can be applied to the beam in addition to its own weight.)

2.0E GP LAM® LVL

SPAN	CONDITION	ONE 1¾″ GP LAM LVL						TWO 1¾″ GP LAM LVL								
		7¼″	9¼″	9½″	11¼″	11⅞″	14″	7¼″	9¼″	9½″	11¼″	11⅞″	14″	16″	18″	24″
6′	Live Load L/360	660						1319								
	Total Load	763	1028	1063	1325	1425	1575	1526	2056	2126	2649	2849	3151	3149	3147	3141
	End / Int. Bearing	2.3 / 5.8	3.1 / 7.8	3.2 / 8.1	4.0 / 10.1	4.3 / 10.8	4.8 / 12.0	2.3 / 5.8	3.1 / 7.8	3.2 / 8.1	4.0 / 10.1	4.3 / 10.8	4.8 / 12.0	4.8 / 12.0	4.8 / 12.0	4.8 / 12.0
8′	Live Load L/360	296	585	629				591	1169	1258						
	Total Load	440	723	746	915	979	1180	880	1446	1492	1831	1958	2360	2358	2356	2350
	End / Int. Bearing	1.8 / 4.5	2.9 / 7.4	3.0 / 7.6	3.7 / 9.3	4.0 / 10.0	4.8 / 12.0	1.8 / 4.5	2.9 / 7.4	3.0 / 7.6	3.7 / 9.3	4.0 / 10.0	4.8 / 12.0	4.8 / 12.0	4.8 / 12.0	4.8 / 12.0
10′	Live Load L/360	156	313	338	542	629		312	627	676	1084	1258				
	Total Load	230	466	502	699	745	909	461	931	1005	1398	1490	1818	1883	1881	1876
	End / Int. Bearing	1.5 / 3.0	2.4 / 5.9	2.6 / 6.4	3.6 / 8.9	3.8 / 9.5	4.6 / 11.6	1.5 / 3.0	2.4 / 5.9	2.6 / 6.4	3.6 / 8.9	3.8 / 9.5	4.6 / 11.6	4.8 / 12.0	4.8 / 12.0	4.8 / 12.0
11′	Live Load L/360	118	239	258	416	484	760	236	478	516	832	967	1519			
	Total Load	174	354	382	589	652	809	348	708	764	1177	1305	1618	1711	1709	1703
	End / Int. Bearing	1.5 / 3.0	2.0 / 5.0	2.2 / 5.4	3.3 / 8.3	3.7 / 9.1	4.5 / 11.3	1.5 / 3.0	2.0 / 5.0	2.2 / 5.4	3.3 / 8.3	3.7 / 9.1	4.5 / 11.3	4.8 / 12.0	4.8 / 12.0	4.8 / 12.0
12′	Live Load L/360	91	186	201	325	379	599	183	372	402	651	758	1198			
	Total Load	134	275	297	483	547	728	268	550	594	966	1094	1457	1567	1565	1559
	End / Int. Bearing	1.5 / 3.0	1.7 / 4.2	1.8 / 4.6	3.0 / 7.4	3.4 / 8.4	4.5 / 11.2	1.5 / 3.0	1.7 / 4.2	1.8 / 4.6	3.0 / 7.4	3.4 / 8.4	4.5 / 11.2	4.8 / 12.0	4.8 / 12.0	4.8 / 12.0
13′	Live Load L/360	72	147	159	259	302	480	145	295	319	519	605	961	1387		
	Total Load	105	217	235	384	448	636	211	434	470	767	896	1272	1445	1443	1438
	End / Int. Bearing	1.5 / 3.0	1.5 / 3.6	1.6 / 3.9	2.6 / 6.4	3.0 / 7.5	4.2 / 10.6	1.5 / 3.0	1.5 / 3.6	1.6 / 3.9	2.6 / 6.4	3.0 / 7.5	4.2 / 10.6	4.8 / 12.0	4.8 / 12.0	4.8 / 12.0
14′	Live Load L/360	58	119	128	210	245	390	116	238	257	420	490	781	1132		
	Total Load	84	174	188	309	362	548	168	348	377	619	723	1095	1341	1339	1333
	End / Int. Bearing	1.5 / 3.0	1.5 / 3.2	1.5 / 3.4	2.2 / 5.6	2.6 / 6.5	3.9 / 9.8	1.5 / 3.0	1.5 / 3.2	1.5 / 3.4	2.2 / 5.6	2.6 / 6.5	3.9 / 9.8	4.8 / 12.0	4.8 / 12.0	4.8 / 12.0
15′	Live Load L/360	47	97	105	172	201	321	95	195	210	344	402	643	935		
	Total Load	68	141	153	253	296	476	136	283	307	505	592	951	1228	1249	1243
	End / Int. Bearing	1.5 / 3.0	1.5 / 3.0	1.5 / 3.0	2.0 / 4.9	2.3 / 5.7	3.7 / 9.1	1.5 / 3.0	1.5 / 3.0	1.5 / 3.0	2.0 / 4.9	2.3 / 5.7	3.7 / 9.1	4.7 / 11.8	4.8 / 12.0	4.8 / 12.0
16′	Live Load L/360		80	87	142	167	267	78	161	174	285	334	535	781	1084	
	Total Load		116	126	209	245	395	111	233	253	417	489	790	1077	1169	1164
	End / Int. Bearing		1.5 / 3.0	1.5 / 3.0	1.7 / 4.3	2.0 / 5.1	3.2 / 8.1	1.5 / 3.0	1.5 / 3.0	1.5 / 3.0	1.7 / 4.3	2.0 / 5.1	3.2 / 8.1	4.4 / 11.0	4.8 / 12.0	4.8 / 12.0
17′	Live Load L/360		67	73	119	140	225	65	135	146	239	280	450	658	916	
	Total Load		97	105	174	204	331	91	194	210	348	409	662	952	1100	1094
	End / Int. Bearing		1.5 / 3.0	1.5 / 3.0	1.5 / 3.9	1.8 / 4.5	2.9 / 7.3	1.5 / 3.0	1.5 / 3.0	1.5 / 3.0	1.5 / 3.9	1.8 / 4.5	2.9 / 7.3	4.2 / 10.4	4.8 / 12.0	4.8 / 12.0
18′	Live Load L/360		57	61	101	118	191	55	114	123	202	237	382	560	781	
	Total Load		81	88	146	172	280	76	162	176	293	344	560	824	1038	1032
	End / Int. Bearing		1.5 / 3.0	1.5 / 3.0	1.5 / 3.5	1.6 / 4.0	2.6 / 6.5	1.5 / 3.0	1.5 / 3.0	1.5 / 3.0	1.5 / 3.5	1.6 / 4.0	2.6 / 6.5	3.8 / 9.6	4.8 / 12.0	4.8 / 12.0
19′	Live Load L/360		48	52	86	101	163	47	97	105	173	202	327	480	671	
	Total Load		68	74	124	146	238	64	137	149	249	293	477	705	951	976
	End / Int. Bearing		1.5 / 3.0	1.5 / 3.0	1.5 / 3.1	1.5 / 3.6	2.4 / 5.9	1.5 / 3.0	1.5 / 3.0	1.5 / 3.0	1.5 / 3.1	1.5 / 3.6	2.4 / 5.9	3.5 / 8.6	4.6 / 11.6	4.8 / 12.0
20′	Live Load L/360		41	45	74	87	141	40	83	90	148	174	282	414	580	
	Total Load		58	63	106	125	205	54	116	126	212	250	409	606	853	926
	End / Int. Bearing		1.5 / 3.0	1.5 / 3.0	1.5 / 3.0	1.5 / 3.3	2.1 / 5.3	1.5 / 3.0	1.5 / 3.0	1.5 / 3.0	1.5 / 3.0	1.5 / 3.3	2.1 / 5.3	3.1 / 7.9	4.4 / 11.0	4.8 / 12.0
22′	Live Load L/360				56	65	106		63	68	112	131	213	315	442	
	Total Load				79	93	153		85	93	158	186	307	457	646	840
	End / Int. Bearing				1.5 / 3.0	1.5 / 3.0	1.8 / 4.5		1.5 / 3.0	1.5 / 3.0	1.5 / 3.0	1.5 / 3.0	1.8 / 4.5	2.6 / 6.6	3.7 / 9.2	4.8 / 12.0
24′	Live Load L/360				43	51	82		48	52	87	102	165	244	344	
	Total Load				60	71	117		64	70	120	142	235	352	499	768
	End / Int. Bearing				1.5 / 3.0	1.5 / 3.0	1.5 / 3.8		1.5 / 3.0	1.5 / 3.0	1.5 / 3.0	1.5 / 3.0	1.5 / 3.8	2.2 / 5.6	3.1 / 7.8	4.8 / 12.0
26′	Live Load L/360					40	65			41	68	80	131	193	273	623
	Total Load					54	91			53	92	109	183	275	392	707
	End / Int. Bearing					1.5 / 3.0	1.5 / 3.2			1.5 / 3.0	1.5 / 3.0	1.5 / 3.0	1.5 / 3.2	1.9 / 4.8	2.7 / 6.7	4.8 / 12.0
28′	Live Load L/360						52				55	64	105	156	220	505
	Total Load						72				72	85	144	219	313	655
	End / Int. Bearing						1.5 / 3.0				1.5 / 3.0	1.5 / 3.0	1.5 / 3.0	1.7 / 4.1	2.3 / 5.8	4.8 / 12.0

KEY TO TABLES

Live Load L/360 = Maximum live load — limits deflection to L/360

Total Load = Maximum total load — limits deflection to L/240

End / Int. Bearing = Required minimum end bearing (inches) for simple or multiple span beams and minimum interior bearing (inches) for multiple span beams based on plate bearing stress of 565 psi.

See "Using Allowable Uniform Floor and Roof Load Tables," page 40.

GP LAM®
LAMINATED VENEER LUMBER

ALLOWABLE UNIFORM FLOOR LOADS (PLF) – 100%

(Can be applied to the beam in addition to its own weight.)

2.0E GP LAM® LVL

SPAN	CONDITION	THREE 1¾″ GP LAM LVL								FOUR 1¾″ GP LAM LVL							
		9¼″	9½″	11¼″	11⅞″	14″	16″	18″	24″	9¼″	9½″	11¼″	11⅞″	14″	16″	18″	24″
6′	Live Load L/360																
	Total Load	3084	3190	3974	4274	4726	4723	4720	4712	4112	4253	5299	5699	6301	6298	6294	6283
	End / Int. Bearing	3.1 / 7.8	3.2 / 8.1	4.0 / 10.1	4.3 / 10.8	4.8 / 12.0	4.8 / 12.0	4.8 / 12.0	4.8 / 12.0	3.1 / 7.8	3.2 / 8.1	4.0 / 10.1	4.3 / 10.8	4.8 / 12.0	4.8 / 12.0	4.8 / 12.0	4.8 / 12.0
8′	Live Load L/360	1754	1887							2338	2516						
	Total Load	2169	2238	2746	2937	3540	3537	3534	3525	2891	2984	3662	3916	4719	4716	4712	4701
	End / Int. Bearing	2.9 / 7.4	3.0 / 7.6	3.7 / 9.3	4.0 / 10.0	4.8 / 12.0	4.8 / 12.0	4.8 / 12.0	4.8 / 12.0	2.9 / 7.4	3.0 / 7.6	3.7 / 9.3	4.0 / 10.0	4.8 / 12.0	4.8 / 12.0	4.8 / 12.0	4.8 / 12.0
10′	Live Load L/360	940	1014	1626	1887					1254	1352	2168	2516				
	Total Load	1397	1507	2096	2235	2727	2825	2822	2813	1863	2010	2795	2980	3636	3766	3763	3751
	End / Int. Bearing	2.4 / 5.9	2.6 / 6.4	3.6 / 8.9	3.8 / 9.5	4.6 / 11.6	4.8 / 12.0	4.8 / 12.0	4.8 / 12.0	2.4 / 5.9	2.6 / 6.4	3.6 / 8.9	3.8 / 9.5	4.6 / 11.6	4.8 / 12.0	4.8 / 12.0	4.8 / 12.0
11′	Live Load L/360	717	773	1248	1451	2279				956	1031	1663	1934	3038			
	Total Load	1062	1147	1766	1957	2427	2566	2563	2555	1416	1529	2355	2609	3235	3421	3418	3406
	End / Int. Bearing	2.0 / 5.0	2.2 / 5.4	3.3 / 8.3	3.7 / 9.1	4.5 / 11.3	4.8 / 12.0	4.8 / 12.0	4.8 / 12.0	2.0 / 5.0	2.2 / 5.4	3.3 / 8.3	3.7 / 9.1	4.5 / 11.3	4.8 / 12.0	4.8 / 12.0	4.8 / 12.0
12′	Live Load L/360	558	603	977	1137	1798				744	804	1302	1517	2397			
	Total Load	824	891	1449	1642	2185	2350	2347	2339	1099	1188	1932	2189	2913	3134	3130	3119
	End / Int. Bearing	1.7 / 4.2	1.8 / 4.6	3.0 / 7.4	3.4 / 8.4	4.5 / 11.2	4.8 / 12.0	4.8 / 12.0	4.8 / 12.0	1.7 / 4.2	1.8 / 4.6	3.0 / 7.4	3.4 / 8.4	4.5 / 11.2	4.8 / 12.0	4.8 / 12.0	4.8 / 12.0
13′	Live Load L/360	443	479	778	907	1441	2081			591	638	1037	1210	1921	2774		
	Total Load	651	704	1151	1344	1909	2168	2165	2156	869	939	1535	1792	2545	2890	2886	2875
	End / Int. Bearing	1.5 / 3.6	1.6 / 3.9	2.6 / 6.4	3.0 / 7.5	4.2 / 10.6	4.8 / 12.0	4.8 / 12.0	4.8 / 12.0	1.5 / 3.6	1.6 / 3.9	2.6 / 6.4	3.0 / 7.5	4.2 / 10.6	4.8 / 12.0	4.8 / 12.0	4.8 / 12.0
14′	Live Load L/360	357	386	629	735	1171	1698			476	515	839	980	1562	2265		
	Total Load	523	566	928	1085	1643	2011	2008	2000	697	754	1237	1447	2191	2682	2678	2667
	End / Int. Bearing	1.5 / 3.2	1.5 / 3.4	2.2 / 5.6	2.6 / 6.5	3.9 / 9.8	4.8 / 12.0	4.8 / 12.0	4.8 / 12.0	1.5 / 3.2	1.5 / 3.4	2.2 / 5.6	2.6 / 6.5	3.9 / 9.8	4.8 / 12.0	4.8 / 12.0	4.8 / 12.0
15′	Live Load L/360	292	316	516	603	964	1403			390	421	688	804	1286	1871		
	Total Load	425	460	758	887	1427	1841	1873	1864	567	614	1011	1183	1902	2455	2497	2486
	End / Int. Bearing	1.5 / 3.0	1.5 / 3.0	2.0 / 4.9	2.3 / 5.7	3.7 / 9.1	4.7 / 11.8	4.8 / 12.0	4.8 / 12.0	1.5 / 3.0	1.5 / 3.0	2.0 / 4.9	2.3 / 5.7	3.7 / 9.1	4.7 / 11.8	4.8 / 12.0	4.8 / 12.0
16′	Live Load L/360	242	261	428	501	803	1171	1626		322	349	571	667	1070	1562	2168	
	Total Load	350	379	626	734	1184	1616	1754	1746	466	505	835	979	1579	2154	2339	2328
	End / Int. Bearing	1.5 / 3.0	1.5 / 3.0	1.7 / 4.3	2.0 / 5.1	3.2 / 8.1	4.4 / 11.0	4.8 / 12.0	4.8 / 12.0	1.5 / 3.0	1.5 / 3.0	1.7 / 4.3	2.0 / 5.1	3.2 / 8.1	4.4 / 11.0	4.8 / 12.0	4.8 / 12.0
17′	Live Load L/360	202	219	359	420	675	987	1374		270	292	479	560	900	1317	1833	
	Total Load	290	315	522	613	993	1429	1649	1641	387	420	696	817	1324	1905	2199	2188
	End / Int. Bearing	1.5 / 3.0	1.5 / 3.0	1.5 / 3.9	1.8 / 4.5	2.9 / 7.3	4.2 / 10.4	4.8 / 12.0	4.8 / 12.0	1.5 / 3.0	1.5 / 3.0	1.5 / 3.9	1.8 / 4.5	2.9 / 7.3	4.2 / 10.4	4.8 / 12.0	4.8 / 12.0
18′	Live Load L/360	171	185	304	356	573	840	1171		228	247	405	474	764	1120	1562	
	Total Load	243	264	440	517	840	1237	1556	1548	325	352	586	689	1119	1649	2075	2064
	End / Int. Bearing	1.5 / 3.0	1.5 / 3.0	1.5 / 3.5	1.6 / 4.0	2.6 / 6.5	3.8 / 9.6	4.8 / 12.0	4.8 / 12.0	1.5 / 3.0	1.5 / 3.0	1.5 / 3.5	1.6 / 4.0	2.6 / 6.5	3.8 / 9.6	4.8 / 12.0	4.8 / 12.0
19′	Live Load L/360	146	158	259	304	490	720	1006		194	210	346	405	654	960	1341	
	Total Load	206	223	373	439	715	1057	1426	1465	274	298	497	585	954	1409	1901	1953
	End / Int. Bearing	1.5 / 3.0	1.5 / 3.0	1.5 / 3.1	1.5 / 3.6	2.4 / 5.9	3.5 / 8.6	4.6 / 11.6	4.8 / 12.0	1.5 / 3.0	1.5 / 3.0	1.5 / 3.1	1.5 / 3.6	2.4 / 5.9	3.5 / 8.6	4.6 / 11.6	4.8 / 12.0
20′	Live Load L/360	125	135	223	261	423	621	870		167	181	297	349	563	828	1160	
	Total Load	175	190	319	375	614	909	1279	1390	233	253	425	501	819	1212	1706	1853
	End / Int. Bearing	1.5 / 3.0	1.5 / 3.0	1.5 / 3.0	1.5 / 3.3	2.1 / 5.3	3.1 / 7.9	4.4 / 11.0	4.8 / 12.0	1.5 / 3.0	1.5 / 3.0	1.5 / 3.0	1.5 / 3.3	2.1 / 5.3	3.1 / 7.9	4.4 / 11.0	4.8 / 12.0
22′	Live Load L/360	94	102	168	197	320	472	663		126	136	225	263	427	629	884	
	Total Load	128	140	237	280	460	685	968	1260	171	187	316	373	614	914	1291	1680
	End / Int. Bearing	1.5 / 3.0	1.5 / 3.0	1.5 / 3.0	1.5 / 3.0	1.8 / 4.5	2.6 / 6.6	3.7 / 9.2	4.8 / 12.0	1.5 / 3.0	1.5 / 3.0	1.5 / 3.0	1.5 / 3.0	1.8 / 4.5	2.6 / 6.6	3.7 / 9.2	4.8 / 12.0
24′	Live Load L/360	73	79	130	153	248	367	516		97	105	174	204	331	489	688	
	Total Load	96	105	180	213	353	527	748	1152	128	140	240	284	470	703	998	1537
	End / Int. Bearing	1.5 / 3.0	1.5 / 3.0	1.5 / 3.0	1.5 / 3.0	1.5 / 3.8	2.2 / 5.6	3.1 / 7.8	4.8 / 12.0	1.5 / 3.0	1.5 / 3.0	1.5 / 3.0	1.5 / 3.0	1.5 / 3.8	2.2 / 5.6	3.1 / 7.8	4.8 / 12.0
26′	Live Load L/360	57	62	103	120	196	290	409	935	76	83	137	161	262	387	546	1246
	Total Load	73	80	138	164	275	413	588	1061	97	106	184	219	366	550	784	1415
	End / Int. Bearing	1.5 / 3.0	1.5 / 3.0	1.5 / 3.0	1.5 / 3.0	1.5 / 3.2	1.9 / 4.8	2.7 / 6.7	4.8 / 12.0	1.5 / 3.0	1.5 / 3.0	1.5 / 3.0	1.5 / 3.0	1.5 / 3.2	1.9 / 4.8	2.7 / 6.7	4.8 / 12.0
28′	Live Load L/360	46	50	82	97	158	234	330	757	61	66	110	129	210	312	440	1009
	Total Load	56	61	108	128	217	328	469	983	75	82	144	171	289	437	626	1311
	End / Int. Bearing	1.5 / 3.0	1.5 / 3.0	1.5 / 3.0	1.5 / 3.0	1.5 / 3.0	1.7 / 4.1	2.3 / 5.8	4.8 / 12.0	1.5 / 3.0	1.5 / 3.0	1.5 / 3.0	1.5 / 3.0	1.5 / 3.0	1.7 / 4.1	2.3 / 5.8	4.8 / 12.0

KEY TO TABLES

Live Load L/360 = Maximum live load — limits deflection to L/360

Total Load = Maximum total load — limits deflection to L/240

End / Int. Bearing = Required minimum end bearing (inches) for simple or multiple span beams and minimum interior bearing (inches) for multiple span beams based on plate bearing stress of 565 psi.

See "Using Allowable Uniform Floor and Roof Load Tables," page 40.

ALLOWABLE UNIFORM ROOF LOADS (PLF) – 115% (SNOW)

(Can be applied to the beam in addition to its own weight.)

2.0E GP LAM® LVL

		ONE 1¾″ GP LAM LVL						TWO 1¾″ GP LAM LVL								
SPAN	CONDITION	7¼″	9¼″	9½″	11¼″	11⅞″	14″	7¼″	9¼″	9½″	11¼″	11⅞″	14″	16″	18″	24″
6′	Live Load L/240															
	Total Load	878	1183	1223	1524	1576	1575	1756	2366	2447	3048	3153	3151	3149	3147	3141
	End / Int. Bearing	2.7 / 6.7	3.6 / 9.0	3.7 / 9.3	4.6 / 11.6	4.8 / 12.0	4.8 / 12.0	2.7 / 6.7	3.6 / 9.0	3.7 / 9.3	4.6 / 11.6	4.8 / 12.0	4.8 / 12.0	4.8 / 12.0	4.8 / 12.0	4.8 / 12.0
8′	Live Load L/240	444						887								
	Total Load	560	832	859	1054	1127	1180	1120	1664	1717	2107	2253	2360	2358	2356	2350
	End / Int. Bearing	2.3 / 5.7	3.4 / 8.5	3.5 / 8.7	4.3 / 10.7	4.6 / 11.5	4.8 / 12.0	2.3 / 5.7	3.4 / 8.5	3.5 / 8.7	4.3 / 10.7	4.6 / 11.5	4.8 / 12.0	4.8 / 12.0	4.8 / 12.0	4.8 / 12.0
10′	Live Load L/240	234	470	507				468	940	1014						
	Total Load	308	567	596	804	858	943	617	1133	1192	1609	1715	1885	1883	1881	1876
	End / Int. Bearing	1.6 / 3.9	2.9 / 7.2	3.0 / 7.6	4.1 / 10.2	4.4 / 10.9	4.8 / 12.0	1.6 / 3.9	2.9 / 7.2	3.0 / 7.6	4.1 / 10.2	4.4 / 10.9	4.8 / 12.0	4.8 / 12.0	4.8 / 12.0	4.8 / 12.0
11′	Live Load L/240	177	358	387	624	725		355	717	773	1248	1451				
	Total Load	233	468	492	678	751	856	466	935	984	1356	1502	1713	1711	1709	1703
	End / Int. Bearing	1.5 / 3.3	2.6 / 6.6	2.8 / 6.9	3.8 / 9.5	4.2 / 10.5	4.8 / 12.0	1.5 / 3.3	2.6 / 6.6	2.8 / 6.9	3.8 / 9.5	4.2 / 10.5	4.8 / 12.0	4.8 / 12.0	4.8 / 12.0	4.8 / 12.0
12′	Live Load L/240	137	279	301	488	569		275	558	603	977	1137				
	Total Load	180	368	397	569	630	784	360	736	795	1137	1260	1569	1567	1565	1559
	End / Int. Bearing	1.5 / 3.0	2.3 / 5.6	2.4 / 6.1	3.5 / 8.7	3.9 / 9.6	4.8 / 12.0	1.5 / 3.0	2.3 / 5.6	2.4 / 6.1	3.5 / 8.7	3.9 / 9.6	4.8 / 12.0	4.8 / 12.0	4.8 / 12.0	4.8 / 12.0
13′	Live Load L/240	109	221	239	389	454	720	218	443	479	778	907	1441			
	Total Load	142	291	315	484	536	724	283	582	629	968	1072	1447	1445	1443	1438
	End / Int. Bearing	1.5 / 3.0	1.9 / 4.9	2.1 / 5.2	3.2 / 8.0	3.6 / 8.9	4.8 / 12.0	1.5 / 3.0	1.9 / 4.9	2.1 / 5.2	3.2 / 8.0	3.6 / 8.9	4.8 / 12.0	4.8 / 12.0	4.8 / 12.0	4.8 / 12.0
14′	Live Load L/240	87	179	193	315	367	586	175	357	386	629	735	1171			
	Total Load	113	234	253	414	461	631	226	468	506	828	923	1262	1341	1339	1333
	End / Int. Bearing	1.5 / 3.0	1.7 / 4.2	1.8 / 4.6	3.0 / 7.4	3.3 / 8.3	4.5 / 11.3	1.5 / 3.0	1.7 / 4.2	1.8 / 4.6	3.0 / 7.4	3.3 / 8.3	4.5 / 11.3	4.8 / 12.0	4.8 / 12.0	4.8 / 12.0
15′	Live Load L/240	71	146	158	258	301	482	143	292	316	516	603	964			
	Total Load	92	190	206	339	396	549	184	381	412	677	793	1097	1250	1249	1243
	End / Int. Bearing	1.5 / 3.0	1.5 / 3.7	1.6 / 4.0	2.6 / 6.5	3.0 / 7.6	4.2 / 10.5	1.5 / 3.0	1.5 / 3.7	1.6 / 4.0	2.6 / 6.5	3.0 / 7.6	4.2 / 10.5	4.8 / 12.0	4.8 / 12.0	4.8 / 12.0
16′	Live Load L/240	59	121	131	214	250	401	118	242	262	428	501	803			
	Total Load	75	157	170	280	328	481	150	314	340	560	656	963	1171	1169	1164
	End / Int. Bearing	1.5 / 3.0	1.5 / 3.3	1.5 / 3.5	2.3 / 5.8	2.7 / 6.7	3.9 / 9.9	1.5 / 3.0	1.5 / 3.3	1.5 / 3.5	2.3 / 5.8	2.7 / 6.7	3.9 / 9.9	4.8 / 12.0	4.8 / 12.0	4.8 / 12.0
17′	Live Load L/240	49	101	109	179	210	338	98	202	219	359	420	675	987		
	Total Load	62	130	141	234	274	426	124	261	283	468	549	851	1098	1100	1094
	End / Int. Bearing	1.5 / 3.0	1.5 / 3.0	1.5 / 3.1	2.1 / 5.1	2.4 / 6.0	3.7 / 9.3	1.5 / 3.0	1.5 / 3.0	1.5 / 3.1	2.1 / 5.1	2.4 / 6.0	3.7 / 9.3	4.8 / 12.0	4.8 / 12.0	4.8 / 12.0
18′	Live Load L/240	41	85	92	152	178	286	83	171	185	304	356	573	840		
	Total Load	52	109	119	197	232	375	104	219	238	394	463	751	977	1038	1032
	End / Int. Bearing	1.5 / 3.0	1.5 / 3.0	1.5 / 3.0	1.8 / 4.6	2.2 / 5.4	3.5 / 8.7	1.5 / 3.0	1.5 / 3.0	1.5 / 3.0	1.8 / 4.6	2.2 / 5.4	3.5 / 8.7	4.5 / 11.3	4.8 / 12.0	4.8 / 12.0
19′	Live Load L/240		73	79	129	152	245	71	146	158	259	304	490	720		
	Total Load		93	100	168	197	320	87	186	201	335	394	640	876	982	976
	End / Int. Bearing		1.5 / 3.0	1.5 / 3.0	1.7 / 4.2	1.9 / 4.9	3.1 / 7.8	1.5 / 3.0	1.5 / 3.0	1.5 / 3.0	1.7 / 4.2	1.9 / 4.9	3.1 / 7.8	4.3 / 10.7	4.8 / 12.0	4.8 / 12.0
20′	Live Load L/240		62	67	111	131	211	61	125	135	223	262	423	621	870	
	Total Load		79	86	143	169	275	74	158	172	287	337	550	789	932	926
	End / Int. Bearing		1.5 / 3.0	1.5 / 3.0	1.5 / 3.8	1.8 / 4.4	2.8 / 7.1	1.5 / 3.0	1.5 / 3.0	1.5 / 3.0	1.5 / 3.8	1.8 / 4.4	2.8 / 7.1	4.1 / 10.2	4.8 / 12.0	4.8 / 12.0
22′	Live Load L/240		47	51	84	99	160	45	94	102	168	198	320	472	663	
	Total Load		58	63	107	126	207	54	117	127	214	252	414	614	813	840
	End / Int. Bearing		1.5 / 3.0	1.5 / 3.0	1.5 / 3.1	1.5 / 3.7	2.4 / 5.9	1.5 / 3.0	1.5 / 3.0	1.5 / 3.0	1.5 / 3.1	1.5 / 3.7	2.4 / 5.9	3.5 / 8.8	4.6 / 11.5	4.8 / 12.0
24′	Live Load L/240			39	65	76	124		73	79	130	153	248	367	516	
	Total Load			48	81	96	159		88	96	163	193	318	474	671	768
	End / Int. Bearing			1.5 / 3.0	1.5 / 3.0	1.5 / 3.1	2.0 / 5.0		1.5 / 3.0	1.5 / 3.0	1.5 / 3.0	1.5 / 3.1	2.0 / 5.0	3.0 / 7.4	4.2 / 10.4	4.8 / 12.0
26′	Live Load L/240				51	60	98		57	62	103	121	196	290	409	
	Total Load				63	75	124		68	74	126	150	248	372	529	707
	End / Int. Bearing				1.5 / 3.0	1.5 / 3.0	1.7 / 4.3		1.5 / 3.0	1.5 / 3.0	1.5 / 3.0	1.5 / 3.0	1.7 / 4.3	2.5 / 6.4	3.6 / 9.0	4.8 / 12.0
28′	Live Load L/240				41	48	79		46	50	82	97	158	234	330	
	Total Load				49	59	98		52	57	99	118	197	296	423	655
	End / Int. Bearing				1.5 / 3.0	1.5 / 3.0	1.5 / 3.7		1.5 / 3.0	1.5 / 3.0	1.5 / 3.0	1.5 / 3.0	1.5 / 3.7	2.2 / 5.5	3.1 / 7.8	4.8 / 12.0

KEY TO TABLES

Live Load L/240 = Maximum live load — limits deflection to L/240

Total Load = Maximum total load — limits deflection to L/180

End / Int. Bearing = Required minimum end bearing (inches) for simple or multiple span beams and minimum interior bearing (inches) for multiple span beams based on plate bearing stress of 565 psi.

See "Using Allowable Uniform Floor and Roof Load Tables," page 40.

GP LAM®
LAMINATED VENEER LUMBER

ALLOWABLE UNIFORM ROOF LOADS (PLF) – 115% (SNOW)

(Can be applied to the beam in addition to its own weight.)

2.0E GP LAM® LVL

SPAN	CONDITION	THREE 1¾″ GP LAM LVL								FOUR 1¾″ GP LAM LVL							
		9¼″	9½″	11¼″	11⅞″	14″	16″	18″	24″	9¼″	9½″	11¼″	11⅞″	14″	16″	18″	24″
6′	Live Load L/240																
	Total Load	3549	3670	4573	4729	4726	4723	4720	4712	4731	4894	6097	6305	6301	6298	6294	6283
	End / Int. Bearing	3.6 / 9.0	3.7 / 9.3	4.6 / 11.6	4.8 / 12.0	4.8 / 12.0	4.8 / 12.0	4.8 / 12.0	4.8 / 12.0	3.6 / 9.0	3.7 / 9.3	4.6 / 11.6	4.8 / 12.0	4.8 / 12.0	4.8 / 12.0	4.8 / 12.0	4.8 / 12.0
8′	Live Load L/240																
	Total Load	2496	2576	3161	3380	3540	3537	3534	3525	3328	3435	4214	4506	4719	4716	4712	4701
	End / Int. Bearing	3.4 / 8.5	3.5 / 8.7	4.3 / 10.7	4.6 / 11.5	4.8 / 12.0	4.8 / 12.0	4.8 / 12.0	4.8 / 12.0	3.4 / 8.5	3.5 / 8.7	4.3 / 10.7	4.6 / 11.5	4.8 / 12.0	4.8 / 12.0	4.8 / 12.0	4.8 / 12.0
10′	Live Load L/240	1410	1521							1880	2028						
	Total Load	1700	1788	2413	2573	2828	2825	2822	2813	2267	2385	3218	3430	3770	3766	3763	3751
	End / Int. Bearing	2.9 / 7.2	3.0 / 7.6	4.1 / 10.2	4.4 / 10.9	4.8 / 12.0	4.8 / 12.0	4.8 / 12.0	4.8 / 12.0	2.9 / 7.2	3.0 / 7.6	4.1 / 10.2	4.4 / 10.9	4.8 / 12.0	4.8 / 12.0	4.8 / 12.0	4.8 / 12.0
11′	Live Load L/240	1075	1160	1871	2176					1434	1547	2495	2901				
	Total Load	1403	1476	2033	2253	2569	2566	2563	2555	1870	1968	2711	3004	3425	3421	3418	3406
	End / Int. Bearing	2.6 / 6.6	2.8 / 6.9	3.8 / 9.5	4.2 / 10.5	4.8 / 12.0	4.8 / 12.0	4.8 / 12.0	4.8 / 12.0	2.6 / 6.6	2.8 / 6.9	3.8 / 9.5	4.2 / 10.5	4.8 / 12.0	4.8 / 12.0	4.8 / 12.0	4.8 / 12.0
12′	Live Load L/240	838	904	1465	1706					1117	1206	1953	2275				
	Total Load	1104	1192	1706	1890	2353	2350	2347	2339	1471	1590	2275	2521	3137	3134	3130	3119
	End / Int. Bearing	2.3 / 5.6	2.4 / 6.1	3.5 / 8.7	3.9 / 9.6	4.8 / 12.0	4.8 / 12.0	4.8 / 12.0	4.8 / 12.0	2.3 / 5.6	2.4 / 6.1	3.5 / 8.7	3.9 / 9.6	4.8 / 12.0	4.8 / 12.0	4.8 / 12.0	4.8 / 12.0
13′	Live Load L/240	665	718	1167	1361	2161				886	957	1556	1815	2882			
	Total Load	873	944	1451	1608	2171	2168	2165	2156	1164	1258	1935	2144	2894	2890	2886	2875
	End / Int. Bearing	1.9 / 4.9	2.1 / 5.2	3.2 / 8.0	3.6 / 8.9	4.8 / 12.0	4.8 / 12.0	4.8 / 12.0	4.8 / 12.0	1.9 / 4.9	2.1 / 5.2	3.2 / 8.0	3.6 / 8.9	4.8 / 12.0	4.8 / 12.0	4.8 / 12.0	4.8 / 12.0
14′	Live Load L/240	536	579	944	1102	1757				715	772	1259	1469	2343			
	Total Load	701	759	1243	1384	1892	2011	2008	2000	935	1012	1657	1846	2523	2682	2678	2667
	End / Int. Bearing	1.7 / 4.2	1.8 / 4.6	3.0 / 7.4	3.3 / 8.3	4.5 / 11.3	4.8 / 12.0	4.8 / 12.0	4.8 / 12.0	1.7 / 4.2	1.8 / 4.6	3.0 / 7.4	3.3 / 8.3	4.5 / 11.3	4.8 / 12.0	4.8 / 12.0	4.8 / 12.0
15′	Live Load L/240	438	474	774	904	1446				584	632	1032	1206	1929			
	Total Load	571	618	1016	1189	1646	1876	1873	1864	761	824	1354	1585	2195	2501	2497	2486
	End / Int. Bearing	1.5 / 3.7	1.6 / 4.0	2.6 / 6.5	3.0 / 7.6	4.2 / 10.5	4.8 / 12.0	4.8 / 12.0	4.8 / 12.0	1.5 / 3.7	1.6 / 4.0	2.6 / 6.5	3.0 / 7.6	4.2 / 10.5	4.8 / 12.0	4.8 / 12.0	4.8 / 12.0
16′	Live Load L/240	363	392	642	751	1204				484	523	856	1001	1606			
	Total Load	471	510	840	984	1444	1757	1754	1746	627	679	1120	1312	1926	2343	2339	2328
	End / Int. Bearing	1.5 / 3.3	1.5 / 3.5	2.3 / 5.8	2.7 / 6.7	3.9 / 9.9	4.8 / 12.0	4.8 / 12.0	4.8 / 12.0	1.5 / 3.3	1.5 / 3.5	2.3 / 5.8	2.7 / 6.7	3.9 / 9.9	4.8 / 12.0	4.8 / 12.0	4.8 / 12.0
17′	Live Load L/240	304	328	538	630	1013	1481			405	438	718	840	1350	1975		
	Total Load	392	424	702	823	1277	1646	1649	1641	522	566	936	1097	1703	2195	2199	2188
	End / Int. Bearing	1.5 / 3.0	1.5 / 3.1	2.1 / 5.1	2.4 / 6.0	3.7 / 9.3	4.8 / 12.0	4.8 / 12.0	4.8 / 12.0	1.5 / 3.0	1.5 / 3.1	2.1 / 5.1	2.4 / 6.0	3.7 / 9.3	4.8 / 12.0	4.8 / 12.0	4.8 / 12.0
18′	Live Load L/240	257	278	456	534	859	1259			342	370	608	711	1146	1679		
	Total Load	329	357	592	695	1126	1466	1556	1548	439	476	789	926	1501	1955	2075	2064
	End / Int. Bearing	1.5 / 3.0	1.5 / 3.0	1.8 / 4.6	2.2 / 5.4	3.5 / 8.7	4.5 / 11.3	4.8 / 12.0	4.8 / 12.0	1.5 / 3.0	1.5 / 3.0	1.8 / 4.6	2.2 / 5.4	3.5 / 8.7	4.5 / 11.3	4.8 / 12.0	4.8 / 12.0
19′	Live Load L/240	219	237	389	456	735	1080			292	316	519	608	980	1439		
	Total Load	279	302	503	591	961	1313	1473	1465	372	403	670	788	1281	1751	1964	1953
	End / Int. Bearing	1.5 / 3.0	1.5 / 3.0	1.7 / 4.2	1.9 / 4.9	3.1 / 7.8	4.3 / 10.7	4.8 / 12.0	4.8 / 12.0	1.5 / 3.0	1.5 / 3.0	1.7 / 4.2	1.9 / 4.9	3.1 / 7.8	4.3 / 10.7	4.8 / 12.0	4.8 / 12.0
20′	Live Load L/240	188	203	335	392	634	932	1305		251	271	446	523	845	1243	1740	
	Total Load	238	258	430	506	825	1183	1398	1390	317	344	574	675	1100	1578	1864	1853
	End / Int. Bearing	1.5 / 3.0	1.5 / 3.0	1.5 / 3.8	1.8 / 4.4	2.8 / 7.1	4.1 / 10.2	4.8 / 12.0	4.8 / 12.0	1.5 / 3.0	1.5 / 3.0	1.5 / 3.8	1.8 / 4.4	2.8 / 7.1	4.1 / 10.2	4.8 / 12.0	4.8 / 12.0
22′	Live Load L/240	142	153	253	297	480	708	994		189	205	337	395	640	944	1325	
	Total Load	176	191	321	379	621	921	1219	1260	235	255	428	505	827	1228	1626	1680
	End / Int. Bearing	1.5 / 3.0	1.5 / 3.0	1.5 / 3.1	1.5 / 3.7	2.4 / 5.9	3.5 / 8.8	4.6 / 11.5	4.8 / 12.0	1.5 / 3.0	1.5 / 3.0	1.5 / 3.1	1.5 / 3.7	2.4 / 5.9	3.5 / 8.8	4.6 / 11.5	4.8 / 12.0
24′	Live Load L/240	109	118	196	230	372	550	774		146	158	261	306	497	733	1032	
	Total Load	133	145	245	289	477	711	1006	1152	177	193	327	386	636	948	1342	1537
	End / Int. Bearing	1.5 / 3.0	1.5 / 3.0	1.5 / 3.0	1.5 / 3.1	2.0 / 5.0	3.0 / 7.4	4.2 / 10.4	4.8 / 12.0	1.5 / 3.0	1.5 / 3.0	1.5 / 3.0	1.5 / 3.1	2.0 / 5.0	3.0 / 7.4	4.2 / 10.4	4.8 / 12.0
26′	Live Load L/240	86	93	154	181	294	436	614		115	124	206	242	393	581	818	
	Total Load	102	111	190	225	373	558	793	1061	136	148	253	300	497	744	1057	1415
	End / Int. Bearing	1.5 / 3.0	1.5 / 3.0	1.5 / 3.0	1.5 / 3.0	1.7 / 4.3	2.5 / 6.4	3.6 / 9.0	4.8 / 12.0	1.5 / 3.0	1.5 / 3.0	1.5 / 3.0	1.5 / 3.0	1.7 / 4.3	2.5 / 6.4	3.6 / 9.0	4.8 / 12.0
28′	Live Load L/240	69	75	124	145	237	351	495		92	100	165	194	316	467	660	
	Total Load	79	86	149	177	296	445	634	983	105	115	199	236	394	593	845	1311
	End / Int. Bearing	1.5 / 3.0	1.5 / 3.0	1.5 / 3.0	1.5 / 3.0	1.5 / 3.7	2.2 / 5.5	3.1 / 7.8	4.8 / 12.0	1.5 / 3.0	1.5 / 3.0	1.5 / 3.0	1.5 / 3.0	1.5 / 3.7	2.2 / 5.5	3.1 / 7.8	4.8 / 12.0

KEY TO TABLES

Live Load L/240 = Maximum live load — limits deflection to L/240

Total Load = Maximum total load — limits deflection to L/180

End / Int. Bearing = Required minimum end bearing (inches) for simple or multiple span beams and minimum interior bearing (inches) for multiple span beams based on plate bearing stress of 565 psi.

See "Using Allowable Uniform Floor and Roof Load Tables," page 40.

ALLOWABLE UNIFORM ROOF LOADS (PLF) – 125% (NON-SNOW)

(Can be applied to the beam in addition to its own weight.)

2.0E GP LAM® LVL

SPAN	CONDITION	ONE 1¾″ GP LAM LVL						TWO 1¾″ GP LAM LVL								
		7¼″	9¼″	9½″	11¼″	11⅞″	14″	7¼″	9¼″	9½″	11¼″	11⅞″	14″	16″	18″	24″
6′	Live Load L/240															
	Total Load	954	1286	1330	1577	1576	1575	1909	2572	2660	3153	3153	3151	3149	3147	3141
	End / Int. Bearing	2.9 / 7.3	3.9 / 9.8	4.0 / 10.1	4.8 / 12.0	4.8 / 12.0	4.8 / 12.0	2.9 / 7.3	3.9 / 9.8	4.0 / 10.1	4.8 / 12.0	4.8 / 12.0	4.8 / 12.0	4.8 / 12.0	4.8 / 12.0	4.8 / 12.0
8′	Live Load L/240	444	877					887	1754							
	Total Load	588	905	934	1146	1181	1180	1176	1809	1867	2291	2362	2360	2358	2356	2350
	End / Int. Bearing	2.4 / 6.0	3.7 / 9.2	3.8 / 9.5	4.7 / 11.6	4.8 / 12.0	4.8 / 12.0	2.4 / 6.0	3.7 / 9.2	3.8 / 9.5	4.7 / 11.6	4.8 / 12.0	4.8 / 12.0	4.8 / 12.0	4.8 / 12.0	4.8 / 12.0
10′	Live Load L/240	234	470	507	813			468	940	1014	1626					
	Total Load	308	616	648	875	933	943	617	1233	1297	1750	1865	1885	1883	1881	1876
	End / Int. Bearing	1.6 / 3.9	3.1 / 7.8	3.3 / 8.3	4.5 / 11.1	4.7 / 11.9	4.8 / 12.0	1.6 / 3.9	3.1 / 7.8	3.3 / 8.3	4.5 / 11.1	4.7 / 11.9	4.8 / 12.0	4.8 / 12.0	4.8 / 12.0	4.8 / 12.0
11′	Live Load L/240	177	358	387	624	725		355	717	773	1248	1451				
	Total Load	233	473	511	737	817	856	466	947	1022	1474	1634	1713	1711	1709	1703
	End / Int. Bearing	1.5 / 3.3	2.7 / 6.6	2.9 / 7.2	4.1 / 10.3	4.6 / 11.4	4.8 / 12.0	1.5 / 3.3	2.7 / 6.6	2.9 / 7.2	4.1 / 10.3	4.6 / 11.4	4.8 / 12.0	4.8 / 12.0	4.8 / 12.0	4.8 / 12.0
12′	Live Load L/240	137	279	301	488	569		275	558	603	977	1137				
	Total Load	180	368	397	619	685	784	360	736	795	1237	1371	1569	1567	1565	1559
	End / Int. Bearing	1.5 / 3.0	2.3 / 5.6	2.4 / 6.1	3.8 / 9.5	4.2 / 10.5	4.8 / 12.0	1.5 / 3.0	2.3 / 5.6	2.4 / 6.1	3.8 / 9.5	4.2 / 10.5	4.8 / 12.0	4.8 / 12.0	4.8 / 12.0	4.8 / 12.0
13′	Live Load L/240	109	221	239	389	454	720	218	443	479	778	907	1441			
	Total Load	142	291	315	513	583	724	283	582	629	1027	1166	1447	1445	1443	1438
	End / Int. Bearing	1.5 / 3.0	1.9 / 4.9	2.1 / 5.2	3.4 / 8.5	3.9 / 9.7	4.8 / 12.0	1.5 / 3.0	1.9 / 4.9	2.1 / 5.2	3.4 / 8.5	3.9 / 9.7	4.8 / 12.0	4.8 / 12.0	4.8 / 12.0	4.8 / 12.0
14′	Live Load L/240	87	179	193	315	367	586	175	357	386	629	735	1171			
	Total Load	113	234	253	414	484	671	226	468	506	828	968	1343	1341	1339	1333
	End / Int. Bearing	1.5 / 3.0	1.7 / 4.2	1.8 / 4.6	3.0 / 7.4	3.5 / 8.7	4.8 / 12.0	1.5 / 3.0	1.7 / 4.2	1.8 / 4.6	3.0 / 7.4	3.5 / 8.7	4.8 / 12.0	4.8 / 12.0	4.8 / 12.0	4.8 / 12.0
15′	Live Load L/240	71	146	158	258	301	482	143	292	316	516	603	964			
	Total Load	92	190	206	339	396	597	184	381	412	677	793	1194	1250	1249	1243
	End / Int. Bearing	1.5 / 3.0	1.5 / 3.7	1.6 / 4.0	2.6 / 6.5	3.0 / 7.6	4.6 / 11.4	1.5 / 3.0	1.5 / 3.7	1.6 / 4.0	2.6 / 6.5	3.0 / 7.6	4.6 / 11.4	4.8 / 12.0	4.8 / 12.0	4.8 / 12.0
16′	Live Load L/240	59	121	131	214	250	401	118	242	262	428	501	803			
	Total Load	75	157	170	280	328	524	150	314	340	560	656	1048	1171	1169	1164
	End / Int. Bearing	1.5 / 3.0	1.5 / 3.3	1.5 / 3.5	2.3 / 5.8	2.7 / 6.7	4.3 / 10.7	1.5 / 3.0	1.5 / 3.3	1.5 / 3.5	2.3 / 5.8	2.7 / 6.7	4.3 / 10.7	4.8 / 12.0	4.8 / 12.0	4.8 / 12.0
17′	Live Load L/240	49	101	109	179	210	338	98	202	219	359	420	675	987		
	Total Load	62	130	141	234	274	443	124	261	283	468	549	887	1102	1100	1094
	End / Int. Bearing	1.5 / 3.0	1.5 / 3.0	1.5 / 3.1	2.1 / 5.1	2.4 / 6.0	3.9 / 9.7	1.5 / 3.0	1.5 / 3.0	1.5 / 3.1	2.1 / 5.1	2.4 / 6.0	3.9 / 9.7	4.8 / 12.0	4.8 / 12.0	4.8 / 12.0
18′	Live Load L/240	41	85	92	152	178	286	83	171	185	304	356	573	840		
	Total Load	52	109	119	197	232	375	104	219	238	394	463	751	1040	1038	1032
	End / Int. Bearing	1.5 / 3.0	1.5 / 3.0	1.5 / 3.0	1.8 / 4.6	2.2 / 5.4	3.5 / 8.7	1.5 / 3.0	1.5 / 3.0	1.5 / 3.0	1.8 / 4.6	2.2 / 5.4	3.5 / 8.7	4.8 / 12.0	4.8 / 12.0	4.8 / 12.0
19′	Live Load L/240		73	79	129	152	245	71	146	158	259	304	490	720		
	Total Load		93	100	168	197	320	87	186	201	335	394	640	944	982	976
	End / Int. Bearing		1.5 / 3.0	1.5 / 3.0	1.7 / 4.2	1.9 / 4.9	3.1 / 7.8	1.5 / 3.0	1.5 / 3.0	1.5 / 3.0	1.7 / 4.2	1.9 / 4.9	3.1 / 7.8	4.6 / 11.5	4.8 / 12.0	4.8 / 12.0
20′	Live Load L/240		62	67	111	131	211	61	125	135	223	262	423	621	870	
	Total Load		79	86	143	169	275	74	158	172	287	337	550	813	932	926
	End / Int. Bearing		1.5 / 3.0	1.5 / 3.0	1.5 / 3.8	1.8 / 4.4	2.8 / 7.1	1.5 / 3.0	1.5 / 3.0	1.5 / 3.0	1.5 / 3.8	1.8 / 4.4	2.8 / 7.1	4.2 / 10.5	4.8 / 12.0	4.8 / 12.0
22′	Live Load L/240		47	51	84	99	160	45	94	102	168	198	320	472	663	
	Total Load		58	63	107	126	207	54	117	127	214	252	414	614	846	840
	End / Int. Bearing		1.5 / 3.0	1.5 / 3.0	1.5 / 3.1	1.5 / 3.7	2.4 / 5.9	1.5 / 3.0	1.5 / 3.0	1.5 / 3.0	1.5 / 3.1	1.5 / 3.7	2.4 / 5.9	3.5 / 8.8	4.8 / 12.0	4.8 / 12.0
24′	Live Load L/240			39	65	76	124		73	79	130	153	248	367	516	
	Total Load			48	81	96	159		88	96	163	193	318	474	671	768
	End / Int. Bearing			1.5 / 3.0	1.5 / 3.0	1.5 / 3.1	2.0 / 5.0		1.5 / 3.0	1.5 / 3.0	1.5 / 3.0	1.5 / 3.1	2.0 / 5.0	3.0 / 7.4	4.2 / 10.4	4.8 / 12.0
26′	Live Load L/240				51	60	98		57	62	103	121	196	290	409	
	Total Load				63	75	124		68	74	126	150	248	372	529	707
	End / Int. Bearing				1.5 / 3.0	1.5 / 3.0	1.7 / 4.3		1.5 / 3.0	1.5 / 3.0	1.5 / 3.0	1.5 / 3.0	1.7 / 4.3	2.5 / 6.4	3.6 / 9.0	4.8 / 12.0
28′	Live Load L/240				41	48	79		46	50	82	97	158	234	330	
	Total Load				49	59	98		52	57	99	118	197	296	423	655
	End / Int. Bearing				1.5 / 3.0	1.5 / 3.0	1.5 / 3.7		1.5 / 3.0	1.5 / 3.0	1.5 / 3.0	1.5 / 3.0	1.5 / 3.7	2.2 / 5.5	3.1 / 7.8	4.8 / 12.0

KEY TO TABLES

Live Load L/240 = Maximum live load — limits deflection to L/240

Total Load = Maximum total load — limits deflection to L/180

End / Int. Bearing = Required minimum end bearing (inches) for simple or multiple span beams and minimum interior bearing (inches) for multiple span beams based on plate bearing stress of 565 psi.

See "Using Allowable Uniform Floor and Roof Load Tables," page 40.

GP LAM®
LAMINATED VENEER LUMBER

ALLOWABLE UNIFORM ROOF LOADS (PLF) – 125% (NON-SNOW)

(Can be applied to the beam in addition to its own weight.)

2.0E GP LAM® LVL

SPAN	CONDITION	THREE 1¾″ GP LAM LVL								FOUR 1¾″ GP LAM LVL							
		9¼″	9½″	11¼″	11⅞″	14″	16″	18″	24″	9¼″	9½″	11¼″	11⅞″	14″	16″	18″	24″
6′	Live Load L/240																
	Total Load	3858	3991	4730	4729	4726	4723	4720	4712	5144	5321	6307	6305	6301	6298	6294	6283
	End / Int. Bearing	3.9 / 9.8	4.0 / 10.1	4.8 / 12.0	4.8 / 12.0	4.8 / 12.0	4.8 / 12.0	4.8 / 12.0	4.8 / 12.0	3.9 / 9.8	4.0 / 10.1	4.8 / 12.0	4.8 / 12.0	4.8 / 12.0	4.8 / 12.0	4.8 / 12.0	4.8 / 12.0
8′	Live Load L/240	2631								3507							
	Total Load	2714	2801	3437	3543	3540	3537	3534	3525	3619	3735	4583	4723	4719	4716	4712	4701
	End / Int. Bearing	3.7 / 9.2	3.8 / 9.5	4.7 / 11.6	4.8 / 12.0	4.8 / 12.0	4.8 / 12.0	4.8 / 12.0	4.8 / 12.0	3.7 / 9.2	3.8 / 9.5	4.7 / 11.6	4.8 / 12.0	4.8 / 12.0	4.8 / 12.0	4.8 / 12.0	4.8 / 12.0
10′	Live Load L/240	1410	1521	2439						1880	2028	3252					
	Total Load	1849	1945	2624	2798	2828	2825	2822	2813	2466	2593	3499	3730	3770	3766	3763	3751
	End / Int. Bearing	3.1 / 7.8	3.3 / 8.3	4.5 / 11.1	4.7 / 11.9	4.8 / 12.0	4.8 / 12.0	4.8 / 12.0	4.8 / 12.0	3.1 / 7.8	3.3 / 8.3	4.5 / 11.1	4.7 / 11.9	4.8 / 12.0	4.8 / 12.0	4.8 / 12.0	4.8 / 12.0
11′	Live Load L/240	1075	1160	1871	2176					1434	1547	2495	2901				
	Total Load	1420	1533	2212	2450	2569	2566	2563	2555	1894	2045	2949	3267	3425	3421	3418	3406
	End / Int. Bearing	2.7 / 6.6	2.9 / 7.2	4.1 / 10.3	4.6 / 11.4	4.8 / 12.0	4.8 / 12.0	4.8 / 12.0	4.8 / 12.0	2.7 / 6.6	2.9 / 7.2	4.1 / 10.3	4.6 / 11.4	4.8 / 12.0	4.8 / 12.0	4.8 / 12.0	4.8 / 12.0
12′	Live Load L/240	838	904	1465	1706					1117	1206	1953	2275				
	Total Load	1104	1192	1856	2056	2353	2350	2347	2339	1471	1590	2475	2742	3137	3134	3130	3119
	End / Int. Bearing	2.3 / 5.6	2.4 / 6.1	3.8 / 9.5	4.2 / 10.5	4.8 / 12.0	4.8 / 12.0	4.8 / 12.0	4.8 / 12.0	2.3 / 5.6	2.4 / 6.1	3.8 / 9.5	4.2 / 10.5	4.8 / 12.0	4.8 / 12.0	4.8 / 12.0	4.8 / 12.0
13′	Live Load L/240	665	718	1167	1361	2161				886	957	1556	1815	2882			
	Total Load	873	944	1540	1750	2171	2168	2165	2156	1164	1258	2053	2333	2894	2890	2886	2875
	End / Int. Bearing	1.9 / 4.9	2.1 / 5.2	3.4 / 8.5	3.9 / 9.7	4.8 / 12.0	4.8 / 12.0	4.8 / 12.0	4.8 / 12.0	1.9 / 4.9	2.1 / 5.2	3.4 / 8.5	3.9 / 9.7	4.8 / 12.0	4.8 / 12.0	4.8 / 12.0	4.8 / 12.0
14′	Live Load L/240	536	579	944	1102	1757				715	772	1259	1469	2343			
	Total Load	701	759	1243	1453	2014	2011	2008	2000	935	1012	1657	1937	2685	2682	2678	2667
	End / Int. Bearing	1.7 / 4.2	1.8 / 4.6	3.0 / 7.4	3.5 / 8.7	4.8 / 12.0	4.8 / 12.0	4.8 / 12.0	4.8 / 12.0	1.7 / 4.2	1.8 / 4.6	3.0 / 7.4	3.5 / 8.7	4.8 / 12.0	4.8 / 12.0	4.8 / 12.0	4.8 / 12.0
15′	Live Load L/240	438	474	774	904	1446				584	632	1032	1206	1929			
	Total Load	571	618	1016	1189	1791	1876	1873	1864	761	824	1354	1585	2388	2501	2497	2486
	End / Int. Bearing	1.5 / 3.7	1.6 / 4.0	2.6 / 6.5	3.0 / 7.6	4.6 / 11.4	4.8 / 12.0	4.8 / 12.0	4.8 / 12.0	1.5 / 3.7	1.6 / 4.0	2.6 / 6.5	3.0 / 7.6	4.6 / 11.4	4.8 / 12.0	4.8 / 12.0	4.8 / 12.0
16′	Live Load L/240	363	392	642	751	1204				484	523	856	1001	1606			
	Total Load	471	510	840	984	1572	1757	1754	1746	627	679	1120	1312	2095	2343	2339	2328
	End / Int. Bearing	1.5 / 3.3	1.5 / 3.5	2.3 / 5.8	2.7 / 6.7	4.3 / 10.7	4.8 / 12.0	4.8 / 12.0	4.8 / 12.0	1.5 / 3.3	1.5 / 3.5	2.3 / 5.8	2.7 / 6.7	4.3 / 10.7	4.8 / 12.0	4.8 / 12.0	4.8 / 12.0
17′	Live Load L/240	304	328	538	630	1013	1481			405	438	718	840	1350	1975		
	Total Load	392	424	702	823	1330	1652	1649	1641	522	566	936	1097	1774	2203	2199	2188
	End / Int. Bearing	1.5 / 3.0	1.5 / 3.1	2.1 / 5.1	2.4 / 6.0	3.9 / 9.7	4.8 / 12.0	4.8 / 12.0	4.8 / 12.0	1.5 / 3.0	1.5 / 3.1	2.1 / 5.1	2.4 / 6.0	3.9 / 9.7	4.8 / 12.0	4.8 / 12.0	4.8 / 12.0
18′	Live Load L/240	257	278	456	534	859	1259			342	370	608	711	1146	1679		
	Total Load	329	357	592	695	1126	1559	1556	1548	439	476	789	926	1501	2079	2075	2064
	End / Int. Bearing	1.5 / 3.0	1.5 / 3.0	1.8 / 4.6	2.2 / 5.4	3.5 / 8.7	4.8 / 12.0	4.8 / 12.0	4.8 / 12.0	1.5 / 3.0	1.5 / 3.0	1.8 / 4.6	2.2 / 5.4	3.5 / 8.7	4.8 / 12.0	4.8 / 12.0	4.8 / 12.0
19′	Live Load L/240	219	237	389	456	735	1080			292	316	519	608	980	1439		
	Total Load	279	302	503	591	961	1417	1473	1465	372	403	670	788	1281	1889	1964	1953
	End / Int. Bearing	1.5 / 3.0	1.5 / 3.0	1.7 / 4.2	1.9 / 4.9	3.1 / 7.8	4.6 / 11.5	4.8 / 12.0	4.8 / 12.0	1.5 / 3.0	1.5 / 3.0	1.7 / 4.2	1.9 / 4.9	3.1 / 7.8	4.6 / 11.5	4.8 / 12.0	4.8 / 12.0
20′	Live Load L/240	188	203	335	392	634	932	1305		251	271	446	523	845	1243	1740	
	Total Load	238	258	430	506	825	1220	1398	1390	317	344	574	675	1100	1626	1864	1853
	End / Int. Bearing	1.5 / 3.0	1.5 / 3.0	1.5 / 3.8	1.8 / 4.4	2.8 / 7.1	4.2 / 10.5	4.8 / 12.0	4.8 / 12.0	1.5 / 3.0	1.5 / 3.0	1.5 / 3.8	1.8 / 4.4	2.8 / 7.1	4.2 / 10.5	4.8 / 12.0	4.8 / 12.0
22′	Live Load L/240	142	153	253	297	480	708	994		189	205	337	395	640	944	1325	
	Total Load	176	191	321	379	621	921	1269	1260	235	255	428	505	827	1228	1692	1680
	End / Int. Bearing	1.5 / 3.0	1.5 / 3.0	1.5 / 3.1	1.5 / 3.7	2.4 / 5.9	3.5 / 8.8	4.8 / 12.0	4.8 / 12.0	1.5 / 3.0	1.5 / 3.0	1.5 / 3.1	1.5 / 3.7	2.4 / 5.9	3.5 / 8.8	4.8 / 12.0	4.8 / 12.0
24′	Live Load L/240	109	118	196	230	372	550	774		146	158	261	306	497	733	1032	
	Total Load	133	145	245	289	477	711	1006	1152	177	193	327	386	636	948	1342	1537
	End / Int. Bearing	1.5 / 3.0	1.5 / 3.0	1.5 / 3.0	1.5 / 3.1	2.0 / 5.0	3.0 / 7.4	4.2 / 10.4	4.8 / 12.0	1.5 / 3.0	1.5 / 3.0	1.5 / 3.0	1.5 / 3.1	2.0 / 5.0	3.0 / 7.4	4.2 / 10.4	4.8 / 12.0
26′	Live Load L/240	86	93	154	181	294	436	614		115	124	206	242	393	581	818	
	Total Load	102	111	190	225	373	558	793	1061	136	148	253	300	497	744	1057	1415
	End / Int. Bearing	1.5 / 3.0	1.5 / 3.0	1.5 / 3.0	1.5 / 3.0	1.7 / 4.3	2.5 / 6.4	3.6 / 9.0	4.8 / 12.0	1.5 / 3.0	1.5 / 3.0	1.5 / 3.0	1.5 / 3.0	1.7 / 4.3	2.5 / 6.4	3.6 / 9.0	4.8 / 12.0
28′	Live Load L/240	69	75	124	145	237	351	495		92	100	165	194	316	467	660	
	Total Load	79	86	149	177	296	445	634	983	105	115	199	236	394	593	845	1311
	End / Int. Bearing	1.5 / 3.0	1.5 / 3.0	1.5 / 3.0	1.5 / 3.0	1.5 / 3.7	2.2 / 5.5	3.1 / 7.8	4.8 / 12.0	1.5 / 3.0	1.5 / 3.0	1.5 / 3.0	1.5 / 3.0	1.5 / 3.7	2.2 / 5.5	3.1 / 7.8	4.8 / 12.0

KEY TO TABLES

Live Load L/240 = Maximum live load — limits deflection to L/240

Total Load = Maximum total load — limits deflection to L/180

End / Int. Bearing = Required minimum end bearing (inches) for simple or multiple span beams and minimum interior bearing (inches) for multiple span beams based on plate bearing stress of 565 psi.

See "Using Allowable Uniform Floor and Roof Load Tables," page 40.

FASTENING REQUIREMENTS

GENERAL NOTES:

1. Confirm the adequacy of the beam (depth and thickness) for carrying the designated load.
2. Stress level for nail, bolt and screw values is 100%. Increases of 15% for snow loaded roof conditions or 25% for non-snow roof conditions are permitted.
3. Top and bottom rows of fasteners should be as shown in the fastener clearances detail. For staggered fastening patterns, the maximum end distance applies to all rows.
4. All fasteners must have the length fully embedded, but must not be over-driven, countersunk, or over-tightened.
5. Bolt holes are to be 1/32″ to 1/16″ diameter larger than the bolts. Bolts must meet or exceed ASTM A 307 or SAE J429 Grades 1 or 2. Every bolt must extend through the full thickness of the member. Use washers not less than a standard cut washer under the head and nut meeting ANSI B 18.22.1.
6. 7″ wide beams should only be side-loaded when loads are applied to both sides, when the lesser side load plf is at least 25% of the opposite side, or when the beam is otherwise restrained to minimize rotation.
7. For beam depths <7¼″, the maximum beam thickness must not exceed the beam depth and all fasteners must be staggered up to one-half the required o.c. spacing. For depths ≥7¼″, the maximum beam thickness is 7″.
8. Fastening recommendations are based on the 2012 National Design Specification for Wood Construction (NDS) or fastener manufacturer's design information.
9. SDS structural screws are produced by Simpson Strong-Tie Company, Inc., WS structural screws are produced by United Steel Products Company, and TrussLok® structural screws are produced by FastenMaster-OMG, Inc. Structural screws must be installed per manufacturer's recommendations.

FASTENER CLEARANCES FOR MULTIPLE-PLY MEMBERS

FASTENER	A	B		C		D
	MIN.	MIN.	MAX.	MIN.	MAX.	MIN.
10d & 16d Nails	2″	2″	6″	4″	12″	3″
Bolts & Screws	2″	4″	12″	4″	24″	3″

Spacings closer than those above may be acceptable, but require special consideration. Contact your technical representative.

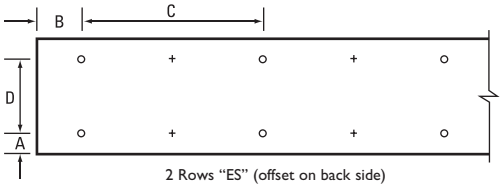

2 Rows "ES" (offset on back side)

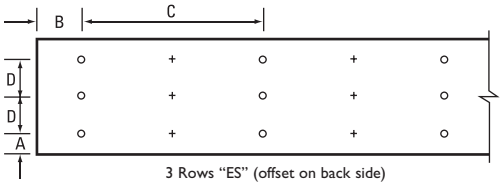

3 Rows "ES" (offset on back side)

MINIMUM FASTENING REQUIREMENTS FOR TOP- AND SIDE-LOADED MEMBERS

		3½″ WIDE	5¼″ WIDE		7″ WIDE		
			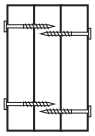	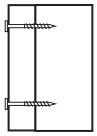	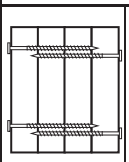	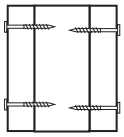	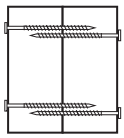
FASTENER TYPE	LVL DEPTH	2-Ply 1¾″	3-Ply 1¾″	1¾″ + 3½″	4-Ply 1¾″	2-Ply 1¾″ + 3½″	2-Ply 3½″
10d (0.128″ x 3″) Nails	7¼″≤d<14″	3 rows @ 12″ o.c.	3 rows @ 12″ o.c. **(ES)**	3 rows @ 12″ o.c.	-	3 rows @ 12″ o.c. **(ES)**	-
	d≥14″	4 rows @ 12″ o.c.	4 rows @ 12″ o.c. **(ES)**	4 rows @ 12″ o.c.	-	4 rows @ 12″ o.c. **(ES)**	-
16d (0.162″ x 3½″) Nails	7¼″≤d<14″	2 rows @ 12″ o.c.	2 rows @ 12″ o.c. **(ES)**	2 rows @ 12″ o.c.	-	2 rows @ 12″ o.c. **(ES)**	-
	d≥14″	3 rows @ 12″ o.c.	3 rows @ 12″ o.c. **(ES)**	3 rows @ 12″ o.c.	-	3 rows @ 12″ o.c. **(ES)**	-
½″ Through Bolts	d≥7¼″	2 rows @ 24″ o.c.	2 rows @ 24″ o.c.		2 rows @ 24″ o.c.		
SDS ¼″ x 3½″, WS35, 3⅜″ TrussLok		2 rows @ 24″ o.c.	2 rows @ 24″ o.c. **(ES)**	2 rows @ 24″ o.c.	-	2 rows @ 24″ o.c. **(ES)**	-
SDS ¼″ x 6″, WS6		-	-		2 rows @ 24″ o.c. **(ES)**		
5″ TrussLok		-	2 rows @ 24″ o.c.		-		
6¾″ TrussLok		-	-		2 rows @ 24″ o.c.		

NOTES:

1. All fasteners must meet the minimum requirements in the table above. Side-loaded multiple-ply members must meet the minimum fastening and side-loading capacity requirements given on page 48.
2. Minimum fastening requirements for depths less than 7¼″ require special consideration. Please contact your technical representative.
3. Three general rules for staggering or offsetting for a certain fastener schedule:
   (1) if staggering or offsetting is not referenced, then none is required;
   (2) if staggering is referenced, then fasteners installed in adjacent rows on the front side are to be staggered up to one-half the o.c. spacing, but maintaining the fastener clearances above; and
   (3) if "**ES**" is referenced, then the fastener schedule must be repeated on each side, with the fasteners on the back side offset up to one-half the o.c. spacing of the front side (whether or not it is staggered).

TOP-LOADED

For required multiple-ply member fastening, only conditions where the loading is applied evenly across the top of all plies shall be considered "top-loaded." All other conditions must be fastened using the side-loaded recommendations on page 48. All top-loaded multiple-ply LVL members must meet the **minimum fastener requirements** and required fastener spacing shown above.

FASTENING REQUIREMENTS (CONTINUED)

2.0E GP LAM® LVL SIDE-LOADED

For required multiple-ply member fastening, conditions where the loading is not applied evenly across the top of all plies shall be considered side-loaded. All side-loaded multiple-ply members must meet the **minimum fastener requirements** on page 47 **and** the loading capacity requirements below.

MAXIMUM UNIFORM LOAD APPLIED TO EITHER OR BOTH OUTSIDE PLIES (PLF)

Refer to General Notes page 47.

- Numbers in the table indicate load in pounds per lineal foot which may be applied to either side, except as shown in note 6 on page 47, based solely on the connection.
- Framing members must be attached with approved metal hangers. Refer to pages 27, 51 and 52 for hanger recommendations.
- This table applies to uniform loading only. Concentrated (point) side loads may require additional consideration.

FASTENER SCHEDULE			3½″ WIDE	5¼″ WIDE		7″ WIDE		
				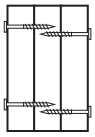	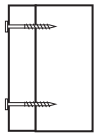	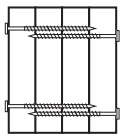	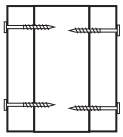	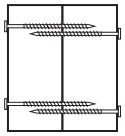
FASTENER TYPE	NUMBER OF FASTENER ROWS	FASTENER ON-CENTER SPACING (IN.)	2-Ply 1¾″	3-Ply 1¾″	1¾″ + 3½″	4-Ply 1¾″	2-Ply 1¾″ + 3½″	2-Ply 3½″
10d (0.128″ x 3″) Nails	3	12	545	405 **(ES)**	405	—	360 **(ES)**	—
	4	12	725	545 **(ES)**	545	—	485 **(ES)**	—
16d (0.162″ x 3½″) Nails	2	12	565	425 **(ES)**	425	—	375 **(ES)**	—
	3	12	845	635 **(ES)**	635	—	563 **(ES)**	—
½″ Through Bolts	2	24	505	380	525	340	465	860
		19.2	635	475	655	425	585	1075
		16	760	570	790	505	700	1290
SDS ¼″ x 3½″	2	24	680	510 **(ES)**	510	—	455 **(ES)**	—
		19.2	850	640 **(ES)**	640	—	565 **(ES)**	—
		16	1020	765 **(ES)**	765	—	680 **(ES)**	—
SDS ¼″ x 6″	2	24	—	—	—	555 **(ES)**	555 **(ES)**	680 **(ES)**
		19.2	—	—	—	695 **(ES)**	695 **(ES)**	850 **(ES)**
		16	—	—	—	835 **(ES)**	835 **(ES)**	1020 **(ES)**
USP WS35	2	24	500	375 **(ES)**	375	—	335 **(ES)**	—
		19.2	625	470 **(ES)**	470	—	415 **(ES)**	—
		16	750	565 **(ES)**	565	—	500 **(ES)**	—
USP WS6	2	24	—	—	—	335 **(ES)**	335 **(ES)**	500 **(ES)**
		19.2	—	—	—	415 **(ES)**	415 **(ES)**	625 **(ES)**
		16	—	—	—	500 **(ES)**	500 **(ES)**	750 **(ES)**
3⅜″ TrussLok®	2	24	535	400 **(ES)**	400	—	355 **(ES)**	—
		19.2	670	500 **(ES)**	500	—	445 **(ES)**	—
		16	800	600 **(ES)**	600	—	535 **(ES)**	—
5″ TrussLok	2	24	—	435	435	—	385 **(ES)**	580 **(ES)**
		19.2	—	545	545	—	485 **(ES)**	725 **(ES)**
		16	—	655	655	—	580 **(ES)**	870 **(ES)**
6¾″ TrussLok	2	24	—	—	—	385	385	580
		19.2	—	—	—	485	485	725
		16	—	—	—	580	580	870

NOTES:

1. "**ES**" indicates fasteners must be installed from **each side** of the beam with the given fastening schedule. Stagger fasteners on opposite side of beam by up to one-half the required fastener on-center spacing.
2. For nails, tabulated values may be multiplied by 2.0 for 6″ o.c. spacing and by 3.0 for 4″ o.c. spacing. For bolts, tabulated values for 24″ o.c. may be multiplied by 2.0 for 12″ o.c. spacing. For structural screws, tabulated values for 24″ o.c. may be multiplied by 2.0 for 12″ o.c. spacing, by 4.0 for 6″ o.c. spacing and by 6.0 for 4″ o.c. spacing.
3. For 3 rows of fasteners, multiply tabulated values for 2 rows by 1.5. Center and stagger middle row by one-half the required o.c. spacing for depths less than 11¼″.
4. Do not use fastener schedule if fastener clearances, required staggering and offsetting, or required fastening cannot be met. Consult technical representative for other options.

TAPERED CUT ALLOWABLE END REACTION – TRUSS ROOF

3½″ THICK GP LAM® LVL BEAMS ALLOWABLE END REACTION (LBS)

LVL DEPTH	TRUSS CHORD SIZE	BEAM BEARING LENGTH	TRUSS SLOPE 4/12		6/12		8/12		10/12		12/12	
			$D_{OUTSIDE}$ (INCHES)	REACTION (LBS)	$D_{OUTSIDE}$ (INCHES)	REACTION (LBS)	$D_{OUTSIDE}$ (INCHES)	REACTION (LBS)	$D_{OUTSIDE}$ (INCHES)	REACTION (LBS)	$D_{OUTSIDE}$ (INCHES)	REACTION (LBS)
7¼″	2x4	3½″	3 15/16	3395	4 3/16	4419	4 7/16	4790	4 13/16	Max.	5 3/16	Max.
		5¼″		3967		4779		Max.		Max.		Max.
	2x6	3½″	6 1/16	4821	6 3/8	Max.	6 7/8	Max.	7¼	Max.	7¼	Max.
		5¼″		Max.		Max.		Max.		Max.		Max.
9¼″ or 9½″	2x4	3½″	3 15/16	3395	4 3/16	3932	4 7/16	5238	4 13/16	5910	5 3/16	6128
		5¼″		3783		4877		5941		6151		Max.
	2x6	3½″	6 1/16	4873	6 3/8	5953	6 7/8	6151	7 7/16	Max.	8	Max.
		5¼″		5576		6144		Max.		Max.		Max.
11¼″ or 11⅞″	2x4	3½″	3 15/16	—	4 3/16	3932	4 7/16	4515	4 13/16	6115	5 3/16	6921
		5¼″		—		4514		5972		7109		7440
	2x6	3½″	6 1/16	4797	6 3/8	5631	6 7/8	6921	7 7/16	6921	8	6921
		5¼″		5185		6699		7405		7481		Max.
14″	2x4	3½″	3 15/16	—	4 3/16	—	4 7/16	—	4 13/16	5238	5 3/16	6921
		5¼″		—		—		—		7291		8508
	2x6	3½″	6 1/16	4797	6 3/8	5419	6 7/8	6803	7 7/16	6921	8	6921
		5¼″		5185		6001		8034		8978		9284
16″	2x6	3½″	6 1/16	4797	6 3/8	5419	6 7/8	6114	7 7/16	6921	8	6921
		5¼″		5185		6001		7577		9437		10269
18″	2x6	3½″	6 1/16	4797	6 3/8	5419	6 7/8	6114	7 7/16	6921	8	6921
		5¼″		5185		6001		6890		9354		10382
24″	2x6	3½″	6 1/16	—	6 3/8	—	6 7/8	—	7 7/16	—	8	6921
		5¼″		—		—		—		—		10203

NOTES:

1. Prior to using this table, beam size must be checked by tables or FASTBeam® software.
2. Table can also be used for 1¾″, 5¼″ and 7″ thick GP Lam LVL beams
   For 1¾″ thick beam: 0.5 x allowable reaction (lbs)
   For 5¼″ thick beam: 1.5 x allowable reaction (lbs)
   For 7″ thick beam: 2.0 x allowable reaction (lbs)
3. Provide lateral support at bearing points, and continuous lateral support along top (or compression edge) of beam.
4. Listed values are for 2.0E GP Lam LVL beam products.
5. Special consideration is required for uplift reactions.
6. Concentrated loads, holes, and other notches are not allowed in the tapered cut region.
7. Southern Pine bearing plate assumed (565 psi).
8. Values are for floor use, 100% duration of load increase.
9. If "Max." is shown in Reaction column, full capacity is available.
10. If no allowable reaction is shown, beam will not work with current input; try using a shallower beam with additional plies.
11. Field verify slope and all dimensions.
12. ¼″ butt cut height assumed for truss bottom chord.

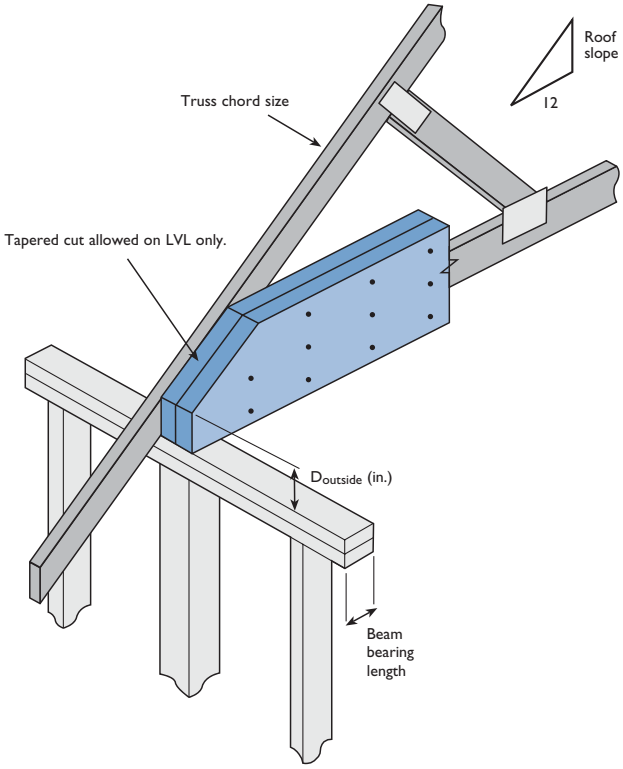

GP LAM®
LAMINATED VENEER LUMBER

TAPERED CUT ALLOWABLE END REACTION – CONVENTIONAL (STICK) ROOF

3½″ THICK GP LAM® LVL BEAMS ALLOWABLE END REACTION (LBS)

LVL DEPTH	RAFTER SIZE	BEAM BEARING LENGTH	RAFTER SLOPE 4/12 D OUTSIDE (INCHES)	4/12 REACTION (LBS)	6/12 D OUTSIDE (INCHES)	6/12 REACTION (LBS)	8/12 D OUTSIDE (INCHES)	8/12 REACTION (LBS)	10/12 D OUTSIDE (INCHES)	10/12 REACTION (LBS)	12/12 D OUTSIDE (INCHES)	12/12 REACTION (LBS)
7¼″	2x6	3½″	4⅝	4095	4⅜	4559	4¼	4759	4¼	4820	4¼	Max.
		5¼″	4 1/16	4095	3½	4559	3⅛	4759	2 13/16	4820	2½	Max.
	2x8	3½″	6½	Max.	6⅜	Max.	6⅜	Max.	6½	Max.	6¾	Max.
		5¼″	5⅞	Max.	5½	Max.	5 3/16	Max.	5 1/16	Max.	5	Max.
9¼″ or 9½″	2x6	3½″	4⅝	3855	4⅜	4089	4¼	5057	4¼	5664	4¼	5966
		5¼″	4 1/16	3855	3½	4089	3⅛	—	2 13/16	—	2½	—
	2x8	3½″	6½	5416	6⅜	5936	6⅜	6118	6½	6151	6¾	Max.
		5¼″	5⅞	5416	5½	5936	5 3/16	6118	5 1/16	6151	5	Max.
	2x10	3½″	8 9/16	Max.	8 9/16	Max.	8 13/16	Max.	9⅛	Max.	9¼	Max.
		5¼″	8	Max.	7 11/16	Max.	7⅝	Max.	7 11/16	Max.	7 13/16	Max.
11¼″ or 11⅞″	2x6	3½″	4⅝	3855	4⅜	4089	4¼	4396	4¼	5418	4¼	6451
		5¼″	4 1/16	3855	3½	—	3⅛	—	2 13/16	—	2½	—
	2x8	3½″	6½	5082	6⅜	5566	6⅜	6745	6½	6921	6¾	6921
		5¼″	5⅞	5082	5½	5566	5 3/16	6745	5 1/16	7203	5	7417
	2x10	3½″	8 9/16	6921	8 9/16	6921	8 13/16	6921	9⅛	Max.	9 9/16	Max.
		5¼″	8	6973	7 11/16	7375	7⅝	7480	7 11/16	Max.	7 13/16	Max.
	2x12	3½″	10 11/16	6921	10 13/16	Max.	11 3/16	Max.	11¼	Max.	11¼	Max.
		5¼″	10⅛	7481	9 15/16	Max.	10	Max.	10¼	Max.	10 11/16	Max.
14″	2x8	3½″	6½	5082	6⅜	5390	6⅜	6111	6½	6921	6¾	6921
		5¼″	5⅞	5082	5½	5390	5 3/16	6111	5 1/16	7550	5	8399
	2x10	3½″	8 9/16	6484	8 9/16	6921	8 13/16	6921	9⅛	6921	9 9/16	6921
		5¼″	8	6484	7 11/16	7589	7⅝	8564	7 11/16	9056	7 13/16	9267
	2x12	3½″	10 11/16	6921	10 13/16	6921	11 3/16	6921	11¾	Max.	12 7/16	Max.
		5¼″	10⅛	8539	9 15/16	9096	10	9293	10¼	Max.	10 11/16	Max.
16″	2x8	3½″	6½	5082	6⅜	5390	6⅜	5794	6½	6921	6¾	6921
		5¼″	5⅞	5082	5½	5390	5 3/16	—	5 1/16	—	5	—
	2x10	3½″	8 9/16	6484	8 9/16	6877	8 13/16	6921	9⅛	6921	9 9/16	6921
		5¼″	8	6484	7 11/16	6877	7⅝	8501	7 11/16	9601	7 13/16	10207
	2x12	3½″	10 11/16	6921	10 13/16	6921	11 3/16	6921	11¾	6921	12 7/16	6921
		5¼″	10⅛	7886	9 15/16	9402	10	10187	10¼	10382	10 11/16	10382
18″	2x8	3½″	6½	5082	6⅜	5390	6⅜	5794	6½	6276	6¾	6921
		5¼″	5⅞	—	5½	—	5 3/16	—	5 1/16	—	5	—
	2x10	3½″	8 9/16	6484	8 9/16	6877	8 13/16	6921	9⅛	6921	9 9/16	6921
		5¼″	8	6484	7 11/16	6877	7⅝	7719	7 11/16	9616	7 13/16	10382
	2x12	3½″	10 11/16	6921	10 13/16	6921	11 3/16	6921	11¾	6921	12 7/16	6921
		5¼″	10⅛	7886	9 15/16	8861	10	10382	10¼	10382	10 11/16	10382
24″	2x10	3½″	8 9/16	6484	8 9/16	6877	8 13/16	6921	9⅛	6921	9 9/16	6921
		5¼″	8	6484	7 11/16	—	7⅝	—	7 11/16	—	7 13/16	—
	2x12	3½″	10 11/16	6921	10 13/16	6921	11 3/16	6921	11¾	6921	12 7/16	6921
		5¼″	10⅛	7886	9 15/16	8364	10	8991	10¼	10382	10 11/16	10382

NOTES:

1. Prior to using this table, beam size must be checked by tables or FASTBeam® software.
2. Table can also be used for 1¾″, 5¼″ and 7″ thick GP Lam LVL beams
   For 1¾″ thick beam: 0.5 x allowable reaction (lbs)
   For 5¼″ thick beam: 1.5 x allowable reaction (lbs)
   For 7″ thick beam: 2.0 x allowable reaction (lbs)
3. Provide lateral support at bearing points, and continuous lateral support along top (or compression edge) of beam.
4. Listed values are for 2.0E GP Lam LVL beam products.
5. Special consideration is required for uplift reactions.
6. Concentrated loads, holes, and other notches are not allowed in the tapered cut region.
7. Southern Pine bearing plate assumed (565 psi).
8. Values are for floor use, 100% duration of load increase.
9. If "Max." is shown in Reaction column, full capacity is available.
10. If no allowable reaction is shown, beam will not work with current input; try using a shallower beam with additional plies.
11. Field verify slope and all dimensions.

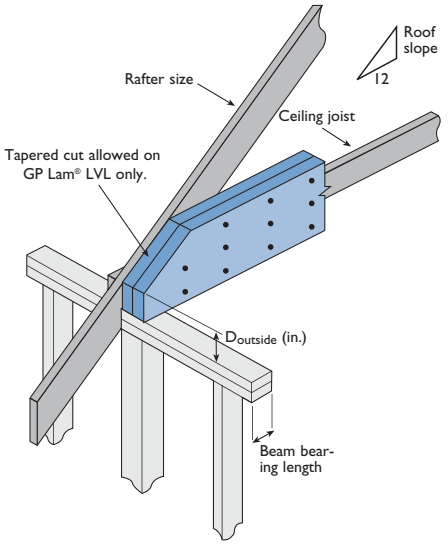

USP STRUCTURAL CONNECTORS™ FOR GP LAM® LVL

GP LAM LVL MEMBER SUPPORTED		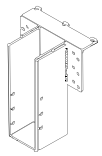			
THICKNESS	BEAM DEPTH	TOP MOUNT	CAPACITY 100% (LBS)	FACE MOUNT	CAPACITY 100% (LBS)
1¾″	7¼″	PHXU17725	4425	HD1770	1975
	9¼″	PHXU17925	4420	HD17925	2540
	9½″	PHXU1795	4420	HD17925	2540
	11¼″	PHXU17112	4420	HD17112	2870
	11⅞″	PHXU17118	4420	HD17112	2870
	14″	PHXU1714	4420	HD1714	3100
3½″	7¼″	—	—	—	—
	9¼″	PHXU35925	6650	THDH410	8260
	9½″	PHXU3595	6650	THDH410	8260
	11¼″	PHXU35112	6650	THDH412	9845
	11⅞″	PHXU35118	6650	THDH412	9845
	14″	HLBH3514	10620	THDH414	9845
	16″	HLBH3516	10620	THDH414	9845
	18″	HLBH3518	10620	THDH414	9845
	24″	—	—	—	—
5¼″	7¼″	—	—	—	—
	9¼″	HLBH55925	10620	THDH610	8725
	9½″	HLBH5595	10620	THDH610	8725
	11¼″	HLBH55112	10620	THDH612	9935
	11⅞″	HLBH55118	10620	THDH612	9935
	14″	HLBH5514	10620	THDH614	11645
	16″	HLBH5516	10620	THDH614	11645
	18″	HLBH5518	10620	THDH614	11645
	24″	—	—	—	—
7″	9¼″	HLBH71925	10620	THDH7210	8260
	9½″	HLBH7195	10620	THDH7210	8260
	11¼″	HLBH71112	10620	THDH7212	9845
	11⅞″	HLBH71118	10620	THDH7212	9845
	14″	HLBH7114	10620	THDH7214	9845
	16″	HLBH7116	10620	THDH7214	9845
	18″	HLBH7118	10620	THDH7214	9845
	24″	HLBH7124	10620	—	—

USP BEAM-TO-COLUMN CONNECTORS FOR GP LAM LVL

COLUMN CAP	CAPACITY* 100% (LBS)	W1	COLUMN **	W2	L	H
KCCQ44	24065	3⅝″	4 x __Wood	3⅝″	11″	6½″
KCCQ46	24065	3⅝″	6 x __Wood	5½″	11″	6½″
KCCQ48	24065	3⅝″	8 x __Wood	7½″	11″	6½″
KCCQ64	37815	5½″	4 x __Wood	3⅝″	11″	6½″
KCCQ66	37815	5½″	6 x __Wood	5½″	11″	6½″
KCCQ68	37815	5½″	8 x __Wood	7½″	11″	6½″
KCCQ84	51565	7½″	4 x __Wood	3⅝″	11″	6½″
KCCQ86	51565	7½″	6 x __Wood	5½″	11″	6½″
KCCQ88	51565	7½″	8 x __Wood	7½″	11″	6½″
KLCC35-4	21000	3⅝″	4″ dia. steel	–	11½″	4″
KLCC525-4	21000	5⅜″	4″ dia. steel	–	11½″	4″
KLCC7-4	21000	7⅛″	4″ dia. steel	–	11½″	4″

* Capacity is maximum capacity of the USP column cap.
** Adequacy of column to be verified by others.

NOTES:

1. Capacity is for the stated duration of load—100% floor loading. Hanger capacity depends on the hanger selected, quantity and size of fasteners used, and the size and type of support to which it is fastened. **Hanger capacities shown are based on attachment to LVL header material using the hanger manufacturer's recommended fastening. Minimum header thickness is 3½″.** Some hanger/header/fastener combinations may not meet maximum beam capacities and a qualified designer should be consulted. Before selecting hangers, please refer to the appropriate reference/design guide from the hanger manufacturer for expanded design information. Many other designs are available for specialized applications.
2. Model numbers shown are for United Steel Products Company, Inc. and Simpson Strong-Tie® Company, Inc. Contact your local building material supplier for connector availablility.
3. Special consideration is required with top mount hangers on nailers. Refer to the hanger manufacturer's catalog for reduced capacity.

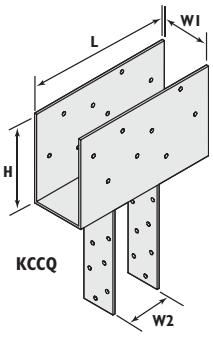

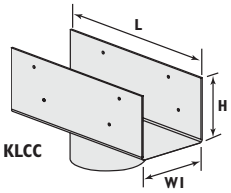

SIMPSON STRONG-TIE® CONNECTORS FOR GP LAM® LVL

Refer to notes on page 51.

GP LAM LVL MEMBER SUPPORTED		TOP MOUNT	CAPACITY 100% (LBS)	FACE MOUNT	CAPACITY 100% (LBS)
THICKNESS	BEAM DEPTH				
1¾″	7¼″	LBV1.81/7.25	2910	HU7 (MAX)	2380
	9¼″	LBV1.81/9.25	2910	HUS1.81/10	5135
	9½″	MIT9.5	2550	HUS1.81/10	5135
	11¼″	B1.81/11.25	4135	HUS1.81/10	5135
	11⅞″	BA1.81/11.88	4015	HUS1.81/10	5135
	14″	B1.81/14	4135	HUS1.81/10	5135
3½″	7¼″	B3.56X	4135	HHUS48	4210
	9¼″	HB3.56/9.25	5815	HHUS410	5635
	9½″	HB3.56/9.5	5815	HHUS410	5635
	11¼″	HB3.56/11.25	5815	HHUS410	5635
	11⅞″	HB3.56/11.88	5815	HHUS410	5635
	14″	GLTV3.514	7500	HGUS414	10100
	16″	GLTV3.516	7500	HGUS414	10100
	18″	HGLTV3.518	10500	HGUS414	10100
	24″	EGQ3.62	19800	HGU3.63-SDS	14145
5¼″	7¼″	HB5.50X	5815	HGUS5.50/8	7460
	9¼″	GLTV5.50/9.25	7500	HGUS5.50/10	9100
	9½″	GLTV5.59	7500	HGUS5.50/10	9100
	11¼″	GLTV5.50/11.25	7500	HGUS5.50/12	9600
	11⅞″	HGLTV5.511	10500	HGUS5.50/12	9600
	14″	HGLTV5.514	10500	HGUS5.50/14	10100
	16″	HGLTV5.516	10500	HGUS5.50/14	10100
	18″	EGQ5.50	19800	HGU5.50-SDS	14145
	24″	EGQ5.50	19800	HHGU5.50-SDS	17845
7″	9¼″	GLTV49.25-2	7500	HGUS7.25/10	9100
	9½″	GLTV49.5-2	7500	HGUS7.25/10	9100
	11¼″	HGLTV411.25-2	10500	HGUS7.25/12	9600
	11⅞″	HGLTV411.88-2	10500	HGUS7.25/12	9600
	14″	EGQ7.25	19800	HGUS7.25/14	10100
	16″	EGQ7.25	19800	HGU7.25-SDS	14145
	18″	EGQ7.25	19800	HHGU7.25-SDS	17845
	24″	EGQ7.25	19800	HHGU7.25-SDS	17845

SIMPSON BEAM-TO-COLUMN CONNECTORS FOR GP LAM LVL

COLUMN CAP	CAPACITY* 100% (LBS)	W1	COLUMN **	W2	L	H
CC44	15310	3⅝″	4 x __Wood	3⅝″	7″	4″
CC46	24060	3⅝″	6 x __Wood	5½″	11″	6½″
CC48	24060	3⅝″	8 x __Wood	7½″	11″	6½″
CC64	28586	5½″	4 x __Wood	3⅝″	11″	6½″
CC66	30250	5½″	6 x __Wood	5½″	11″	6½″
CC68	37810	5½″	8 x __Wood	7½″	11″	6½″
CC7⅛-6	38500	7⅛″	6 x __Wood	5½″	13″	8″
CC7⅛-8	52500	7⅛″	8 x __Wood	7½″	13″	8″
LCC3.5-4	20670	3⅝″	4″ dia. steel	–	11½″	4″
LCC5.25-4	20670	5⅜″	4″ dia. steel	–	11½″	4″
LCC7-4	20670	7⅛″	4″ dia. steel	–	11½″	4″

COLUMN CAP	CAPACITY* 100% (LBS)	W1	COLUMN **	W2	L	H
CCQ44SDS2.5	19020	3⅝″	4 x __Wood	3⅝″	11″	7″
CCQ46SDS2.5	24065	3⅝″	6 x __Wood	5½″	11″	7″
CCQ48SDS2.5	24065	3⅝″	8 x __Wood	7½″	11″	7″
CCQ64SDS2.5	28585	5½″	4 x __Wood	3⅝″	11″	7″
CCQ66SDS2.5	30250	5½″	6 x __Wood	5½″	11″	7″
CCQ68SDS2.5	37815	5½″	8 x __Wood	7½″	11″	7″
CCQ7⅛-6SDS2.5	38500	7⅛″	6 x __Wood	5½″	11″	7″
CCQ7⅛-8SDS2.5	52500	7⅛″	8 x __Wood	7½″	11″	7″

* Capacity is maximum capacity of the Simpson column cap.
** Adequacy of column to be verified by others.

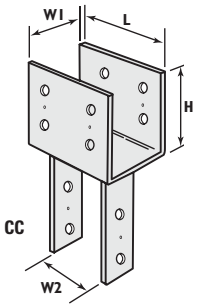

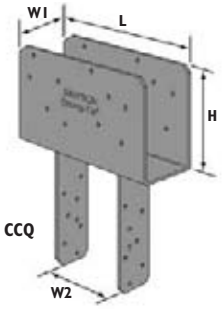

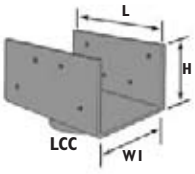

GP LAM® LVL BEAM AND HEADER DESIGN PROPERTIES

1¾″ 2.0E GP LAM LVL ALLOWABLE EDGEWISE DESIGN PROPERTIES[A]

DEPTH[B]	EI (10^6 INCH² LBS)	MAXIMUM RESISTIVE MOMENT (FT-LBS)			MAXIMUM VERTICAL SHEAR (LBS)			WEIGHT (LBS/FT)
		100%	115%	125%	100%	115%	125%	
7¼″	111	3918	4506	4898	2411	2772	3013	3.4
9¼″	231	6208	7139	7760	3076	3537	3845	4.4
9½″	250	6529	7508	8161	3159	3633	3948	4.5
11¼″	415	8985	10333	11231	3741	4302	4676	5.3
11⅞″	488	9951	11444	12439	3948	4541	4936	5.6
14″	800	13581	15618	16976	4655	5353	5819	6.6
16″ [B]	1195	17477	20098	21846	5320	6118	6650	7.6
18″ [B]	1701	21831	25106	27289	5985	6883	7481	8.5
24″ [B]	4032	37591	43229	46988	7980	9177	9975	11.4

A. Table assumes beam has lateral support at bearing points and continuous lateral support along the compression edge of the beam.

B. 1¾″ beams deeper than 14″ must only be used in multiple-ply members.

2.0E GP LAM ALLOWABLE EDGEWISE DESIGN STRESSES[1]

Modulus of Elasticity	E	$= 2.0 \times 10^6$ psi[2]
Shear Modulus of Elasticity	G	= 125,000 psi
Flexural Stress	F_b	= 2,900 psi[3]
Horizontal Shear	F_v	= 285 psi
Compression Perpendicular to Grain	$F_{c\perp}$	= 845 psi[2]
Compression Parallel to Grain	$F_{c\parallel}$	= 2,600 psi
Equivalent Specific Gravity	SG	= 0.50

1. Allowable design stresses apply to depths as small as 3½″ ripped from any depth of beam.
2. No increase is allowed to E, G or $F_{c\perp}$ for duration of load.
3. For depths (d) other than 12″ multiply F_b by $(12/d)^{1/9}$.
4. When calculating deflection, both bending and shear deformations must be included. The deflection equation for a simply-supported beam under uniform load is:

$$\Delta = \frac{270\, w\, L^4}{E\, b\, h^3} + \frac{28.8\, w\, L^2}{E\, b\, h}$$

Where: Δ = estimated deflection, inches; w = uniform load, plf; L = span, feet; E = tabulated modulus of elasticity, psi; b = beam width, inches; h = beam depth, inches

For other spans or loading conditions, see engineering references or use design software.

GP LAM®
LAMINATED VENEER LUMBER

GP LAM® LVL ARCHITECTURAL SPECIFICATIONS

Part 1— General

1.0 — Description

A. Work in this section includes, but is not limited to: Laminated Veneer Lumber (LVL) beams and headers.

B. Related work specified elsewhere: Rough carpentry.

1.1 — Submittals:

A. Product data: Submit manufacturer's descriptive literature indicating material composition, thicknesses, dimensions, loading and fabrication details.

B. Shop drawings: Submit manufacturer's literature indicating installation details. Include locations and details of bearing, blocking, bridging and cutting for work by others.

1.2 — Quality Assurance:

A. Certification: All GP Lam® LVL has been qualified to ASTM D 5456 by APA-The Engineered Wood Association.

1.3 — Delivery, Storage and Handling:

A. Delivery: Deliver materials to the job site in manufacturer's original packaging, containers and bundles with manufacturer's identification intact and legible.

B. Storage and handling: Store and handle materials to protect against contact with damp and wet surfaces, exposure to weather, breakage and damage. Provide air circulation under covering and around stacks of materials.

1.4 — Limitations:

A. Cutting: Except for cutting to length, GP Lam LVL beams and headers shall not be cut, drilled or notched, except as noted in manufacturer's literature.

B. Moisture conditions: GP Lam LVL is for use in covered, dry-use conditions only (moisture content less than 16%).

Part 2 — Products

2.0 — Prefabricated wood beams and headers:

A. Acceptable products: 2.0E

1. Georgia-Pacific, GP Lam LVL floor and roof beams.
2. Georgia-Pacific, GP Lam LVL window and door headers.

B. Characteristics:

1. Construction: 1¾″ and 3½″ thick pressure bonded, lap-jointed wood veneers, with grain of veneers running parallel in the long direction.
2. Standard beam sizes: 2.0E–1¾″ x 7¼″, 9¼″, 9½″, 11¼″, 11⅞″, 14″, 16″, 18″, 24″ As required for loading, deflection and span.
3. Beam length: As required for span and bearing.

2.1 — Accessories:

A. Fasteners: 16d common nails, approved structural screws or ½″ bolts.

B. Hangers:

1. Contact GP or an engineer for acceptable connectors.

Part 3 — Execution

3.0 — General:

A. Provide GP Lam LVL beams and headers where indicated on drawings using hangers and accessories specified.

B. Install GP Lam LVL beams and headers in accordance with manufacturer's recommendations.

3.1 — Accessories:

Install accessories where indicated and in accordance with beam and header manufacturer's instructions.

SALES, UPDATES AND CURRENT INFORMATION

The sale of our engineered lumber products is subject to our terms of sale which are available at www.gp.com/tc or upon request. The information in this document may change without notice. Visit our website at www.buildgp.com for updates and current information or call 877-437-9759 to request a current copy.

GENERAL

The user is responsible for proper installation of our engineered lumber products. Our engineered lumber products must be installed in strict conformity with our instructions and all applicable building code requirements and other regulations. In addition, if not specifically covered by our installation instructions or construction detail illustrations, the products must be installed in accordance with generally accepted design and construction practices. When installing engineered lumber products, the user must also consider the effects of local climate and geography. We do not warrant and are not responsible for the design and construction of any finished structure or system into which our engineered lumber products may be incorporated or other building components that may be used with our products.

LIFETIME LIMITED WARRANTY

Georgia-Pacific engineered lumber products are covered by a lifetime limited warranty. For complete warranty details, terms and conditions, please visit www.buildgp.com or call 877-437-9759.

HEALTH AND SAFETY CAUTION

Georgia-Pacific engineered lumber products are manufactured with one or more of the following adhesives: phenol-formaldehyde, phenol-resorcinol-formaldehyde, melamine, polyurethane emulsion polymer, isocyanate and/or polyurethane. Georgia-Pacific engineered lumber products contain no added urea formaldehyde resins. A Material Safety Data Sheet (MSDS) containing potential physical and health hazard information is available from your employer or by contacting the Products Safety and Health Information Department at Georgia-Pacific LLC, P.O. Box 105605, Atlanta, GA 30348-5605, 404-652-5119 or visit www.buildgp.com.

ENGINEERED FOR PERFORMANCE

WHAT YOU DON'T SEE MATTERS™

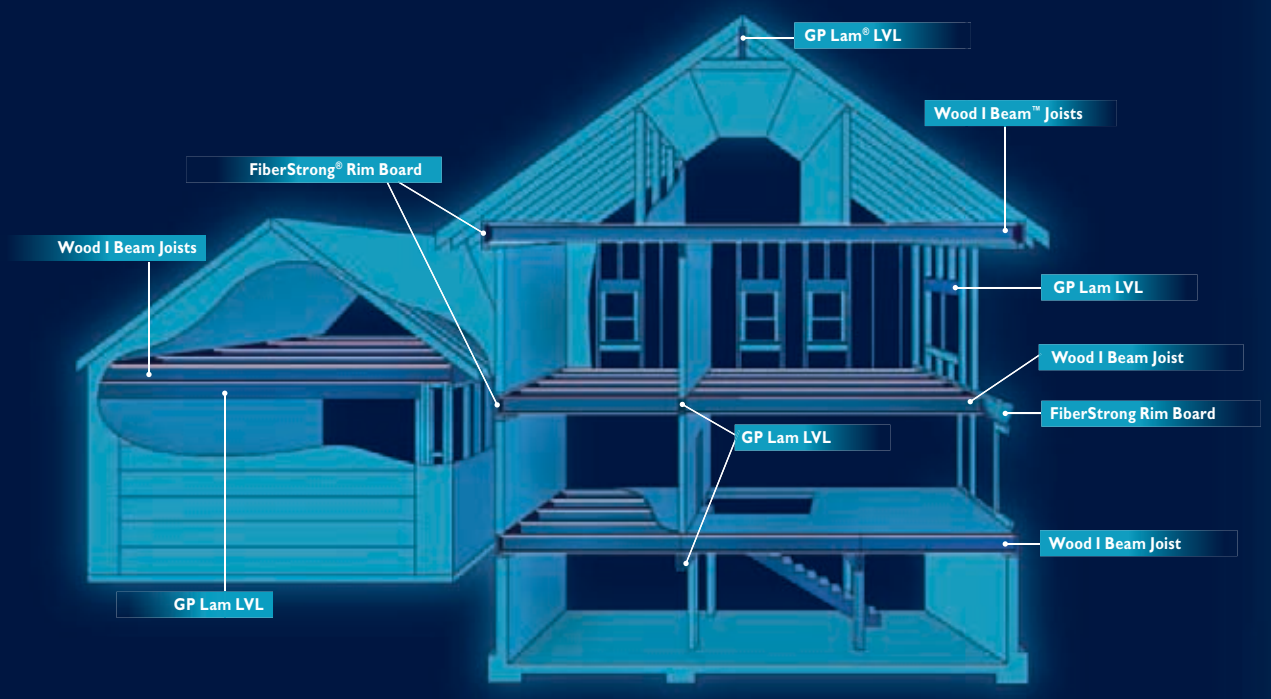

GP WOOD I BEAM™ joists

GP GP LAM® LAMINATED VENEER LUMBER

GP FIBERSTRONG® RIM BOARD

GP GP Glulam

When it comes to floor joists, rim board, beams and headers, builders and contractors choose Georgia-Pacific engineered lumber for many reasons. Today's residential building trends call for large, open spaces and high ceilings, creating a demand for products that provide higher strength and greater stability over longer spans.

Georgia-Pacific engineered lumber products are covered by a lifetime limited warranty. **For complete warranty details, terms and conditions, please visit www.buildgp.com or call 877-437-9759.**

GP Georgia-Pacific Engineered Lumber

Georgia-Pacific Wood Products LLC
133 Peachtree Street
Atlanta, Georgia 30303
877-437-9759

Home Innovation NGBS GREEN CERTIFIED™

RESOURCE EFFICIENCY
INDOOR ENVIRONMENTAL QUALITY

This NGBS Green Certified mark is your assurance that a product is Home Innovation NGBS Green Certified for Resource Efficiency and Indoor Environmental Quality. Please visit Homeinnovation.com/Green for more information.

SUSTAINABLE FORESTRY INITIATIVE Certified Sourcing
www.sfiprogram.org
SFI-00007

Engineered lumber from Georgia-Pacific is made from wood that is sourced through a system that is third-party certified to the Sustainable Forestry Initiative® (SFI®) procurement standard.

Unless otherwise noted, all trademarks are owned by or licensed to Georgia-Pacific Wood Products LLC. APA Rated and Sturd-I-Floor are registered trademarks of APA-The Engineered Wood Association. TrussLok and FastenMaster are registered trademarks of Olympic Manufacturing Group, Inc. Simpson Strong-Tie is a registered trademark of Simpson Strong-Tie Company, Inc. USP Structural Connectors is a trademark of MiTek USA, Inc. Tough-Glass and Summit are trademarks owned by Atlas Roofing Corp. Monier is a trademark owned by Redland Engineering Limited. Gyp-Crete is a trademark owned by Maxxon Corporation. The Home Innovation NGBS Green Certified logo is a trademark of Home Innovation Research Labs. Sustainable Forestry Initiative and SFI are trademarks of Sustainable Forestry Initiative, Inc.
©2014 Georgia-Pacific Wood Products LLC. All rights reserved. Printed in the U.S.A. 1/14 TM Lit. Item #123040.